ADDIS ABABA UNIVERSITY

ADDIS ABABA UNIVERSITY INSTITUTE OF TECHNOLOGY

SCHOOL OF MECHANICAL AND INDUSTRIAL ENGINEERING

INDUSTRIAL ENGINEERING STREAM

IMPROVING THE PERFORMANCE OF THE FOOTWEAR MANUFACTURING INDUSTRY THROUGH LINE BALANCING AND SIMULATION MODELING:

A CASE OF STUDY IN ANBESSA SHOE SHARE COMPANY

By: Bizuayehu Ayalew

March- 2023

Addis Ababa, Ethiopia

This is to certify that the thesis prepared by Bizuayehu Ayalew, titled "**Performance improvement of the footwear manufacturing industry through line balancing and simulation modeling in Anbessa Shoe S.C.**", and submitted in partial fulfillment of the requirement for the degree of Master of Science (Mechanical and Industrial Engineering), complies with the rules of the university and meets the recognized standards with respect to originality and quality.

By: Bizuayehu Ayalew

Name of Student: Bizuayehu Ayalew, ID No. GSE/0886/07 Signature ____ Date_______

Approved By Board of Examiners:

Dr. Gezahegn Tesfaye	____________	March 2023
Chairman, Department	Signature	Date
Dr. Gezahegn Tesfaye	___________	March 2023
Advisor	signature	Date
Dr. Kassu Jalcha	___________	March 2023
Internal Examiner	signature	Date
Dr. Merertu Wakuma	___________	March 2023
External Examiner	signature	Date
Dr. Araya Abera	_____________	March, 2023
School Dean	Signature	Date

Declaration

I hereby declare that the work presented in this thesis, titled "**Improving the Performance of the Footwear Manufacturing Industry through Line Balancing and Simulation Modeling,"** is my own original work that has not been presented for a degree at any other university, and that all resources and references used for the thesis have been properly cited.

_______________________________ _____________________

Bizuayehu Ayalew Date

This is to certify that the above declaration made by the author is correct to the best of my knowledge.

_________________________ __________

Dr. Gezahegn Tesfaye Date

Acknowledgment

Firstly, thanks to Almighty God for giving me the strength, courage and insight needed to complete my research. I would like to take this opportunity to express my gratitude to everyone who has helped me with this work over the years.

Secondly, Dr. Gezahegn Tesfaye, who served as my thesis adviser, has been a great help to me. He gave me advice, pointed me in the right direction, and helped me all the way through the proposal and writing process. Their sincerely offered advice and assistance helped to complete the assignment. My family, notably Hana Ayalew, who has supported me financially, and Seyife wondemu (the Production Planning Head of Anbessa Shoe Sharing Businesses), who provides me with an annual production report and cooperates with data recording time, deserve my sincere gratitude.

Finally, I want to convey my gratitude to the management, employees, and people of Anbessa Shoes for taking the time and making the effort to respond to my questions, provide the necessary documentation, and share valuable information about the company's production process.

Bizuayehu Ayalew

Abstract

Manufacturing system modeling and performance analysis are methods for simulating and evaluating the performance of a production system. Modeling can be done using analytical, physical, or simulation techniques. Simulation is a more effective tool than analytical and physical methodologies for performance improvement studies because it is ideal for dynamic, discrete, and stochastic industrial systems.

Performance on the Anbessa shoe company's production lines has been evaluated and compared to the required level of performance. The most important performance metrics for cutting, stitching, and lasting lines were determined to be low efficiency, lengthy cycle times, high work-in-process levels, and low throughput rates. Processing times, machine failure rates, workspace distances, and manufacturing costs were only a few of the primary and secondary data points acquired.

During direct manufacturing line observation, processing speed was timed using a stopwatch. After this data analysis, an acceptable best fit from the available probability distribution was selected. Simulator models were developed, examined, validated, and assessed using Arena 14.0. Utilizing the opt-hunt software, which searches simulation models for the optimum solutions and generates a cost-benefit analysis for the proposed model, optimization models were constructed. Line balancing processes should be used to reduce workstations and production costs, one of the research's primary targets, in order to save 227,000 EB each month.

When the simulation model's output was finally reviewed, it was discovered that an unbalanced assembly line and a lack of organized workstations were to blame for the manufacturing lines' unsatisfactory performance. As a result, the cutting, stitching, lasting, and finishing efficiency of the recommended models improved by 7%, 3.45%, and 4.1%, and the company's gross profit climbed by 12% as a result. The competitiveness of a company can be greatly increased by the results of the suggested methodology.

Keywords: WIP, cycle time, throughput, efficiency, simulation, optimization, and Workstation

Table of Contents

LIST OF FIGURES

LIST OF TABLES

List of Abbreviation

AAiT: Addis Ababa University Institute of technology

ASSC: Anbessa shoe Share Company

KPIs: Key performance indicators

WIP: Work In Process Inventory

R/F: Reinforcement

POM: Production and operation management

CT: Cycle Time

TH: Throughput

ALB: Assembly Line Balancing

AO: Actual Output

CU: Capacity Utilization

PO: Potential Output

OT: Observation Time

SAM: Standard Allowed Minutes

TLT: Total Lead Time

MLT: Manufacturing Lead Time

Chapter One

1. Background and Justification of Research

1.1. Introduction

The footwear sector is a diverse industry which covers a wide variety of materials (textile, plastics, rubber, and leather) and products ranging from different types of men's, women's, and children's footwear to more specialized products like snowboard boots and protective footwear (Sadeghi et al., 2015).

Growth has historically been slow, and lower-end products dominated the product mix (Oqubay, 2015). Ethiopia is one of the leading leather processing countries in Africa (Addis, 2020). Footwear is an active product in international markets and one of the areas of the strategic industrial development plan of the Ethiopian country and The footwear industry in Ethiopia is thriving and it managed to recover the domestic market which had been swept by imported from Chinese, According to the benchmark implementation plan for the Ethiopian footwear, the sectors produce a product, but it's not according to its requirement productivity (Melkamu, 2021).

The main problem which is faced while balancing an assembly line is to be able to assign a set of tasks or works to particular workstations so that precedence relationship is satisfied also desired performance is obtained(Islam et al., 2019). However, this research is based on a comprehensive study of the shoe manufacturing process performance improvement through line balancing in cutting, stitching, lasting and finishing department. Production and process analysis are significant for the manufacturing companies to improve their productivity and to optimize usage of the resources. It is obvious that, manufacturing is a complicated system that involves sets of tasks, materials, resources, products, and information(Mohammed *et al*., 2012).

In recent years, Derbe (2018); Hensley et.al.2018); Yemane & Hailemichael (2020) have made significant advances in capacity utilization and performance measurement metrics. Operations and production management literature have also reported about the advancements in production performance improvement decisions. Studies on production performance stated that higher capacity utilization and efficient resource management are highly associated with production performance(A. Mulugeta, 2020).

This paper finds the problem and the gapping between the current performance and expected targets. Therefore, various researchers have not been able to access when it comes to researching the line-up techniques. The manpower required for each operation is determined by the cycle time and the benchmark goal. Unequal workloads between workplaces can result in bottlenecks and WIP. Therefore, line-balancing mechanisms play an important role in overcoming these bottlenecks. In addition, optimizing the cycle time will improve the performance of the manufacturing process, thereby making the company more sustainable and competitive.

The objective of line balancing is to balance the workload of each operation to make sure that the flow of work is smooth, that avoid bottlenecks, and operators are able to work at ultimate performance throughout the day. Line balancing is a way to minimize imbalanced workloads between workers to achieve the desired output. Balancing may be achieved by rearrangement of the workstations or by adding machines and workers at some of workstations. This process is intended to reduce waiting time to a minimum, and try to equalize standard time of each operation. A balanced process is one where the actual cycle times at every stage are equal. The line balancing is important to enable better production planning and schedule, operators to work at optimal speed, and keep inventory cost low.

1.2. Justification of Research

Footwear is an active product in international markets. It is being delocalized from developed countries to developing ones. Ethiopian leather shoe industries are producing shoes for export market. The leather footwear industry is considered as an important sub-sector that leads the whole sector's modernization. In addition, it is the last stage of the leather sector where more value is added. Although export of leather footwear started only in 2005, the export value has been growing steadily since then and is expected to have a big impact on the economy(Cherkos, 2016).

Due to the fact that the Ethiopian Leather Footwear Industry (LFI) has a huge potential for boosting the country's economy, the government of gives higher priority to this sector (UNIDO, 2005; Embassy of Japan in Ethiopia, 2008; Global Development Solution, 2006; Sonobe et al., 2009) (Kassaneh & Workalemahu, 2018). The goal of every manufacturing business is to be as efficient, innovative and flexible as possible. Footwear industry is a labor-oriented industry where a good number of workers are deployed in the production line. Among the all other resources like, capital, material, machines, land, energy, information, technology, etc. manpower is very important and should be controlled in most appropriate manner(Ahmed, 2015). Shoe manufactures sectors need improvement to enhance their productivity, because of low productivity, less line efficiency and less labor productivity, inefficient work procedure, unwanted movement and customers dissatisfaction, improper flow process, and poor training, high cycle time and waiting time (idle time) with workers (Melkamu, 2021). Performance measures are the lifeblood of organizations, since without them no decision can be made, as it is the first step to control and improvement (Cherkos, 2014).

Modeling and simulation are emerging as key technologies to support manufacturing in the 21st century. Process modeling and simulation are modeling techniques available to support companies in gaining a better understanding of their manufacturing system behaviors and processes and therefore helping them in decision-making (Ayehu, 2009).

Simulation study of systems is a complex process involving various steps, related to analyzing a simulated system, building an adequate simulation model, experimenting with it, and analyzing and interpreting simulation results.

The simulation modeling and analysis of different types of systems are conducted for the purposes of (Ayehu, 2009).

- ❖ Gaining insight into the operation of a system
- ❖ Developing operating or resource policies to improve system performance
- ❖ Testing new concepts and/or systems before implementation
- ❖ Gaining information without disturbing the actual system

The advantages of simulation modeling go beyond the previously mentioned abilities. Reduced analytic requirements, accelerated experimentation, and easily testable models are a few of them.

This study also focuses on line balancing techniques to minimize waste related to cycle time, setup time, work in process, idle time, throughput rate and efficiency to improve the existing process performance and to increase the company profitability and competitiveness. In other words, to reduce these high Production costs and operation time, the approach used in this dissertation is to use a simulation framework.

Therefore, this research is concerned with the improvement of cutting, stitching, lasting and finishing department through line balancing to producing different model (Hybrid multi-model assembly line) in one production line and intends to provide solution to identified bottlenecks and attempt to propose the solutions for process performance improvement by using simulation modeling.

1.3. Statement of the problem

Nowadays, tanneries produce leather material mainly for footwear, garments, general goods, furniture manufacturers and automotive fabric manufacturers. Of which, the footwear subsector has grown considerably fast. About 65% of the world production of leather is estimated to go into leather footwear production(Addis, 2020). On the contrary, Africa's share of footwear export is mere 1.3% (LIDI 2012). In general, the total production of leather and leather products in Africa are much lower qualitatively, quantitatively and value- wise. Seizing the global market opportunities has remained the key challenge, irrespective of having large resource endowment to satisfy raw material needs (Addis, 2020). Moreover, potential buyers from Europe, North American and African are also showing their interest to source leather footwear from Ethiopia. Increased investment by local and foreign investors to take part in the sectors is also evident to further justify the growth will continue in the years to come. According to the benchmark implementation plan for the Ethiopian footwear sector in 2009, the level of competitiveness in the international market is far below average to hinder the level of desired growth rate though the sector is growing (Tomas, 2014).

Anbessa Shoe Share Company is one of the largest producers and exporters of shoe products in Ethiopia. A recent history of the production of ASSC's principal product lines shows that 51% of its products are targeted at men, 23% at women, and 26% are for children. The entire output from the factory is sold in the local market and is targeted at middle- and lower-income groups. However, it is still producing below its capacity, and production lines have low process performance, such as low line efficiency, high setup time, high work-in-process inventory, low throughput, and high cycle time, etc., which results in low performance. One year's production performance of Anbessa Shoe Share's production lines has been measured and compared with the planned performance level. As a result, the average efficiency of each line has been measured as follows: cutting line 58%, stitching line 51%, and lasting line 50%; the average throughput rate is 52, 51, and 50 pairs of shoes per hour; the average daily WIP is 35, 75, and 47 shoes, respectively. (**Source: Anbessa Shoe Share Company daily report)** The assembly production line was designed to produce 1500 pairs of shoes per day (in one shift), explaining the difference in installed production capacity between the new (1000 pairs) and old (500 pairs) factories. However, its average actual production during data collection is not more than 750 pairs per day in one line. From this, it is clearly seen that the production line is performing below its planned production capacity. According to Ikon *et al*. (2015), line-balancing tries to equalize the amount of work at each workstation based on cycle time and a precedence diagram to improve production performance such as maximum uses of manpower and machine efficiency, minimum process time, minimizing slack time, and maximum output at the desired time. Quality maintenance of the case company, optimizing cycle time, Reduce production costs and minimize idle times at each workstation.

The main causes of low performance in ASSC are improper utilization of production resources such as machines and manpower and an unorganized flow of processes in the production line. Therefore, this research is concerned with the simulation model and performance analysis of the cutting, stitching, laminating, and finishing production lines with the intention of providing solutions to identify bottlenecks and attempting to propose solutions for process performance improvement on each production line.

Thus, the basic research questions in this thesis work include the following:

- What are the currently implemented line performance practices within ASSC?
- What are the existing challenges and inhibiting factors that affect the productivity of each production line?
- What will be the appropriate optimization model that assigns work elements to workstations such that assembly cost is minimized for the case company?

1.4. Objectives of the Research

1.4.1. General Objective

The general objective of this thesis is to develop a model of the production line of the case company, analyze it, and improve its performance by identifying and eliminating bottlenecks through modeling and simulating the production process that can ensure the balance of the assembly line.

1.4.1. Specific Objectives

- To assess the currently implemented line performance practices within ASSC.
- To identify the existing challenges that affects the performance of each production line of the case company.
- To assign work elements to workstations to minimize assembly cost.
- To model and simulate the production process that can ensure the balance of the assembly line.

1.5. Scope of the Study

The scope of this research is focused on improving the performance of the footwear manufacturing industry through line balancing and simulation modeling at Anbessa Shoe Share Company. The selected case company produces different shoe, bag, and belt models for both local and export markets that are processed in the cutting, stitching, laminating, and finishing departments. This study is wide and it is designed to address the whole district of the ASSC, as this sector is the main area given attention by the shoe product in the cutting, stitching, lasting, and finishing departments, and the proposed solution to measure line performance.

1.6. Significance of the Research and Beneficiaries

Theoretical Significance

Many researchers attempted to propose improving the performance of the footwear manufacturing industry through line balancing and simulation modeling. Line balancing techniques are critical for improving company performance by maximizing machine and manpower utilization and minimizing idle time to achieve line targets. In addition, most recent research indicates that line balancing would be directly related to an improvement in a firm's performance. Apart from the previous research engaged in by the company, the purpose of this research is to measure and examine the existing performance improvement through line balancing techniques at Anbessa Shoe Share Company. Therefore, this study is believed to contribute much to ASSC by illuminating how line-balancing affects firm performance and proposing solutions and recommendations that are compatible with the case company in order to improve line performance.

Practical Significance

The practical significance of the study is to increase performance without incurring unnecessary costs by using effective line-balancing techniques. Factors contributing to high costs, such as excessive overtime and manpower, a high level of inventory, and idle time, are all part of the results of poor line balancing. The need to effectively deal with the problems of production scheduling means more staff need to have a comprehensive understanding of the principles and functions of how production works. As such, identifying the problems and suggesting appropriate improvement methods to improve the performance and global competitiveness of ASSC is necessary to increase Ethiopia's economy. The beneficiaries of this paper can be shoe factories, footwear industries, researchers, and students who would conduct studies related to this research area.

1.7. Organization of the thesis

The remaining sections of this research work are structured as follows: Section two presents an important literature survey from reference materials. In this chapter, the general discussion is made to introduce the foundation of performance improvement, line balancing, and review, which includes performance and related terms, manufacturing system performance measures, and performance improvement methods. Section three deals with the methods used for data collection, performance measurement, and evaluation of ASSC. Section four deals with data analysis and the results identified after data analysis. In this section, we summarize the critical line performance problem and propose its solution. Section five contains the proposed proper performance improvement by line balancing techniques. Section six presents the conclusion and recommendations from this study. In addition, this section gives the possible study areas that can be undertaken in the future research areas that are forwarded.

1.8. Limitation of the Study

The researcher was able to select only studies that focused on the production of men's, women's, and children's shoe models, which are the primary outcome shoe models for ASSC analysis. This is because the necessary software is partially accessible. By analyzing the performance improvement and line balancing problem aspects of the case study, the researcher finally decided to use line balancing techniques and Arena software in the case study.

Chapter Two

2. Literature Review

2.1. Introduction

Footwear in the manner of shoes therefore primarily serves the purpose to ease the movement and prevent injuries. Secondly footwear can also be used for fashion and adornment as well as to indicate the status or rank of the person within a social structure(Ali, 2018). In the shoe manufacturing, the production line is dynamic, discrete and stochastic (Mohamed, *et al*., 2012). Its randomness is due to variable processing times, as well as random failures and subsequent repairs such randomness makes it difficult to control the production process or to predict their behavior (Altiok, 2007). All companies strive for better performance, since high performance means high competitiveness, which in turn generates more money. However, there are different ways to increase performance, depending on which viewpoint you choose to take (Grünberg, 2007).

Leather shoe factories have both internal and external factors that cause for low performance and competitiveness. However, the external problems need participation of different bodies-government, leather sector associations and organizations. Therefore, the focus of this study is to the firm level problems as these problems can be solved by the firm using its own potentials, resources and appropriate method to improve the organizational performance (Kassaneh & Workalemahu, 2018).

2.2. Definitions of Important Terminologies

Line Balancing is leveling the workload across all processes in a value stream to remove bottlenecks and excess capacity (Yemane et al., 2020).Work Line balancing is all about arranging a production line so that there is an even flow of production from one work station to the next. Work Line balancing is also a successful tool to reduce bottleneck by balancing the task time of each work station so that there are no delays and nobody is overburden with their task (Bagshaw, 2020). Industry Performance improvements arising from increased manufacturing integration continues to be one of the primary competitive issues in current days. Performance measurement is defined as the process of quantifying the efficiency and effectiveness of action (Tangen, 2004).

Manufacturing can be defined as the application of physical and/or chemical processes to alter the geometry, properties, and/or appearance of a given starting material to make parts or products(Raphael, 2022). Performance is the valued productive output of a system in the form of goods and services. The actual fulfillment of the goods or services requirement is thought of in terms of units of performance. Measurement is the first step in controlling and improving performance (Cherkos, 2016). Performance improvement is critical for companies to remain competitive and aimed at operations, i.e. the way that organizations produce goods and services (Grünberg, 2007). Possibly the two most important performance measures of a factory are cycle time and work-in-process. Cycle time is the time that a job spends within a system. The average cycle time is denoted by CT. Work-in-process is the number of jobs within a system that are either undergoing processing or waiting in a queue for processing. The average work-in- process is denoted by WIP (Suparyanto dan Rosad (2015, 2020).

These are reasons to use Performance Improvement at Company level. At an aggregated, level the Manufacturing industry accounts for a large part of the Swedish Gross Domestic Product (GDP), 22% implies that at least 10% of the GDP is a potential for decreased costs, if the improvement potential in manufacturing is 50%. This increased potential of profit can be assessed with performance improvement tools (Grünberg, 2007).

Manufacturing performance can be classifies as effectiveness and efficiency. Effectiveness means attaining objectives. Effectiveness in a business enhances income, which in turn leads the business to more competitiveness (Tesfaye, 2009). Line balancing is a way to minimize imbalance workloads between workers to achieve the desired output. Balancing may be achieved by rearrangement of the workstations or by adding machines and workers at some of workstations. This process is intended to reduce waiting time to a minimum, and try to equalize standard time of each operation (Addis, 2020).

Simulation modeling is a common paradigm for analyzing complex systems. This simulation model then proceeds to experiment with the system, guided by a prescribed set of goals, such as improved system design, cost–benefit analysis, sensitivity to design parameters, and so on. Modeling is the enterprise of devising a simplified representation of a complex system with the goal of providing and Predictions of the system’s performance measures (metrics) of interest (Yemane et al., 2020).

Conclusions from the researcher's results are that many people who say we are discussing productivity are missing the whole issue of performance. Performance is a much broader term than productivity, although they are strongly related. Cost is a central component of performance, but it also includes other non-cost competitive objectives such as reliability, flexibility, quality, and speed. Modeling and simulation are potential tools for analyzing and studying shoe assembly lines in the footwear industry.

2.3. Overview of Performance Improvement and Line Balancing Techniques

Faced with ever-increasing challenges such as the globalization, increased world competition, and increased customer expectations, companies are pursuing strategies to improve their performance and reduce their costs. Discrete-event modeling and simulation (DES) is a popular tool in widely varying fields for identifying and answering questions about the effects of changes on processes (Sci et al., 2015). Performance of a manufacturing firm can be defined in various ways depending on the questions in mind when one inquires about a firm‘s performance. From a socio-economic perspective, profit is the most common measure of a firm‘s performance. Other indicators include internal rate of return, productivity, superior quality and reliability, flexibility, efficiency, effectiveness, capacity utilization, growth of output and net present value, and market share (Cherkos, 2014). Performance should be improved. At the operative level, performance improvement is about identifying value streams and reducing waste. Definitions of waste and losses, e.g. downtime and rework, are included in most Performance Improvement methods (Grünberg, 2007).

Performance measurement is a process of assessing progress toward achieving predetermined goals, including information on the efficiency with which resources are transformed into goods and services (outputs), the quality of those outputs (how well they are delivered to clients and the extent to which clients are satisfied) and outcomes (the results of a program activity compared to its intended purpose), and the effectiveness of government operations in terms of their specific contributions to program objectives. In contrast, performance measurement endorses a process perspective where the focus is on the internal process of quantifying the effectiveness and the efficiency of action with a set of metrics(*Hermela*, 2016). The manufacturing lead time (MLT) of a product is the total time required to process the product through the manufacturing plant(N. Mulugeta, 2014).

Line balancing is mainly an arrangement of production line for even and smooth flow of production units from one workstation to the next. It utilizes the division of labour principle to assign the work elements to the workstations so that all stations have nearly an equal amount of work to do. Each workman is required to perform at his workstation an assign amount of work timely and repeatedly on each of the production unit as it passes the station(Ahmed, 2015). Balancing the work line focused on processes eliminates waste associated with changeovers, quality defects, process control, factory layout, and machine down- time (Bagshaw, 2020). One of the processes in typical footwear manufacturing facility is stitching. Stitching is a very manual operation, which heavily depends on operator. It is consisting of sequential processes, requires higher operator skills and relatively needs longer time compared to other shoes processing. Stitching line serve as assembly process to form upper-part of footwear(Chen, 2014).

In Conclusion, of the researcher's results is the elimination of non-value-added activities and correct assembly of the production line are the researcher's recommendations in order to improve production performance, efficiency, and idle time. In a sewing production line, the operator often performs the majority of the manual labor. In comparison to other shoe processing, this entails a number of steps, high operator skill requirements, and a considerable amount of time. The seam line serves as the assembly procedure to produce the upper part of the shoe. Utilizing simulation tools to address issues with line bottlenecks will increase production efficiency.

2.4. Line Balancing (Production Leveling)

Now a days, companies assemble more than one model in the same line mainly to meet the demands of its customers on continuous basis, which necessitates the use of mixed-model assembly line balancing (Sivasankaran & Shahabudeen, 2016). Line balancing: Assembly line balancing is the problem of assigning various tasks to workstations, while optimizing one or more objectives without violating any restrictions imposed on the line. ALBP has been an active field of research over the past decades due to its relevancy to diversified industries such as garment, footwear and electronics (Akter & Hossain, 2017). Line balancing is also can be defined as the allocation of sequential work activities into a line called work stations in order to achieve best utilization of labor and equipment thus minimizing idle time. In addition, balancing may be achieved by rearrangement of the workstations and by equalizing the workload among assemblers so that, all operations take about the same amount of time. Furthermore, line balancing benefits an assembly area in many ways, as it minimizes the amount of workers and workstation, which can reduce cost and space for the assembly area. Line balancing also benefits in a way that it can identify the process which causes bottleneck and standardization of work between the operators can ease the bottleneck problem (Munizzi, 2013).

The process of balancing these assembly lines consists in finding an appropriate line balance, meaning that every operations assigned to some workstation must have their precedence constraints and further restrictions satisfied and it can only be accepted only if the station time of neither workstation exceeds the cycle time(Tiago, Covas, & Gomes, 2014). Line balancing is one of the major factors in improving production efficiency, WIP (work-in-process) position, and cycle time performance. A good line balance enables: Better utilization of production resources, such as operator hours or machine usage hours, less accumulation of WIP in the line and smaller production cycle time for the line (Sheu & Chen, 2008). Balancing method is very essential to make the production flow almost smoother compare to the previous layout. Considering working distance, type of machines and efficiency, workers who have extra time to work after completing their works, have been shared their work to complete the bottleneck processes (Shumon et al., 2010). Assembly Line Balancing or simply Line Balancing (LB) is the problem of assigning operations to workstations along an assembly line in such a way that the assignment be optimal in some sense (Manaye, 2021).

A production line is a set of sequential process established on an industrial shop floor. A production process or a manufacturing process is the transformation of raw materials or components into finished products. The stages in a production process involve procurement, fabrication, assembly, testing, packaging and distribution. The production or manufacturing lines in industries can be categories into three type's i.e. automated production lines, semi-automated production lines and manual production lines. The nature of a production line depends on the complexity of the manufacturing parts, the production volume, the sensitivity of the product and cost. Industries' management plan and layout their production lines according to specific production requirements (Subramaniam et al., 2008).

During the assembly process, the product traverses the assembly line, station by station, while in each workstation a fixed predetermined set of tasks is performed. Each task is an atomic working unit, which usually requires specific machinery and skill. The assembly line design involves the assignment of these tasks into the work- stations, subject to given precedence relationships among the tasks (Elia & Choudhary, 2014). The main objective of line balancing is to distribute the task evenly over the workstation so that idle time of man of machine can be minimized. Line balancing aims for grouping the facilities or workers in an efficient pattern in order to; obtain an optimum or most efficient balance of the capacities and flows of the production or assembly processes (Manaye, 2021). Line balancing also benefits in a way that it can identify the process which causes bottleneck and standardization of work between the operators can ease the bottleneck problem (Munizzi, 2013).

In Conclusion, the researcher focused on the assembly line and sustainable assembly line, which are the main bottlenecks in shoe manufacturing, and presented simulation modeling and performance analysis using Arena simulation software to solve the assembly line balancing problem (ALBP) in various situations to improve efficiency in the stitching and lasting shoe production line.

2.5. Detecting Bottleneck in a Production Line

Footwear industry involves process cutting, stitching and assembly. The speed of cutting and assembly processes is higher than stitching, and that is why this operation is considered a bottleneck in the footwear industry. As a result, to solve that bottleneck problem some companies send the pieces to other firms for stitching. The rest uses more labor, machines or apply further strategies to make the cycle time similar to the rest of the lines (Sadeghi et al., 2015).

Bottleneck detection in manufacturing is the first and most essential step to improve overall manufacturing capacity. According to the first step taken to identify a bottleneck is the observation of the company's production system (A. Mulugeta, 2020). Therefore, process bottlenecks can be detected based on cycle time, machine utilization, work in process and waiting time (queue length). Bottleneck detection and elimination methods have been studied since the industrial revolution, since detection of a bottleneck in a production system is a complex task. In the literature, there have been numerous studies about current bottleneck detection methods which can be divided into two categories as analytical and simulation-based (Gundogar et al., 2016). Analytical methods yield satisfactory and reasonable results for long-term analyses but they are not suitable for short-term analyses, since they can give misleading results in short time intervals. Analytical approaches are not as sufficiently applicable as simulation based methods for real manufacturing processes due to highly complicated dynamic/stochastic structure of the problem. On Simulation, methods are widely applied to investigate and estimate bottleneck problems in a workflow. The aim of the current study is to improve the flow of products by reducing bottlenecks in production line using simulation tools (Gundogar et al., 2016). The production line has been balanced considering the bottleneck processes and balancing process where the balancing process has shared the excess time to the bottleneck process. The basic objective of line balancing is to achieve efficient utilization of manpower (Addis, 2020).

In conclusion, it has been established that production line bottlenecks are one of the primary reasons for productivity lags. The use of fixed manufacturing resources may be improved, system throughput can be increased, and total production costs can be decreased by accurately and effectively detecting bottlenecks.

2.6. Types of Assembly Line Model

Manual assembly lines can be designed to deal with variations in assembled products. Depending on the type of product, three types of assembly lines can be distinguished: single model, batch model and mixed model. When product differentiation is difficult, the batch or multiple models are the right model. A mixed model line is used for smooth production and when there is no product differentiation, a single model line is the most suitable model.

2.6.1. Single Assembly Model

In its traditional form, assembly lines were used for high volume production of a single commodity. Nowadays, products without any variation can seldom attract sufficient customers to allow for a profitable utilization of the assembly system. Advanced production technologies enable automated setup operations at negligible setup times and costs(N. Mulugeta, 2011).

Assembly Line Balancing (ALB) is one way to achieve that Principle of interchangeability and division of labour brought in the concept of assembly line, primary aim of the assembly line was to facilitate mass production, standardization, simplification and specialization(Journal et al., 2013). Single line Model can be described as a line that combines a single model. This line produces many units of an unchanged product. The tasks performed at each station are the same for all units. Products with strong demand are destined for this line (Yemane, 2017).

2.6.2. Mixed-Model Line

In practical, many items do not have sufficient demand to justify separate assembly line, but family of separate product might. We can use multiple product line to match the variable demand; however, advantage of inventory reduction is lost. Just-in-time manufacturing brings considerable focus on production of variety of models on the same assembly line, so is the need for Mixed-Model Assembly Line Balancing (MALB)(N. Mulugeta, 2011). Mixed model line: - Mixed model line is producing more than one model. They are made simultaneously on the same line. Once a model is running at a station, other products are made in other seasons. Therefore, each station is equipped to perform various operations necessary to produce any model that moves through it. Many consumer products are assembled in Mixed Model (Yemane, 2017).

2.6.3. Multi-Model Line

In multi-model production, the homogeneity of assembled products and their production processes is not sufficient to allow for facultative production sequences. In order to avoid setup times and costs the assembly is organized in batches. This leads to a short-term lot-sizing problem, which groups models to batches and decides on their assembly sequence. Especially if lot sizes are large, the line balance can in principle be determined separately for each model, as the significance of setup times between batches is comparatively small. However, also in multi- model production a certain degree of similarity in production processes should be inherent(N. Mulugeta, 2014).

The selected case company Anbassa Shoe shear company has four divisions in the production department; Cutting, stitching, lasting and finishing. In the cutting room, Reinforcement, lower and upper leather, EVA sheet and various parts are cut according to the design specification. At the assembly line, the different upper parts of the shoes are glued together and joined together, as a permanent assembly line, the upper part of the shoe and the outer layer are assembled together. Roller chain conveyors aid material movement in the line so the line cannot produce different product models at the same time. Because of this, the assembly line can be considered as a multi-model assembly line as the different models produced on this line follow a batch production system.

To have higher efficiency of the line this sequencing is important because various products may have considerable different task times. Based on the type of sequencing three categories of products arise.

- ✓ Single model assembly line: single model is assembled repeatedly, or one assembly line is complicated to a single model.
- ✓ Mixed-model assembly line: Where in the assembly line produces units of various models in an arbitrarily intermediate sequence.
- ✓ Multi-model assembly line: Where in the assembly line produces a sequence of batches of each model. Each batch contains a unit of only one model or a group of very similar models.

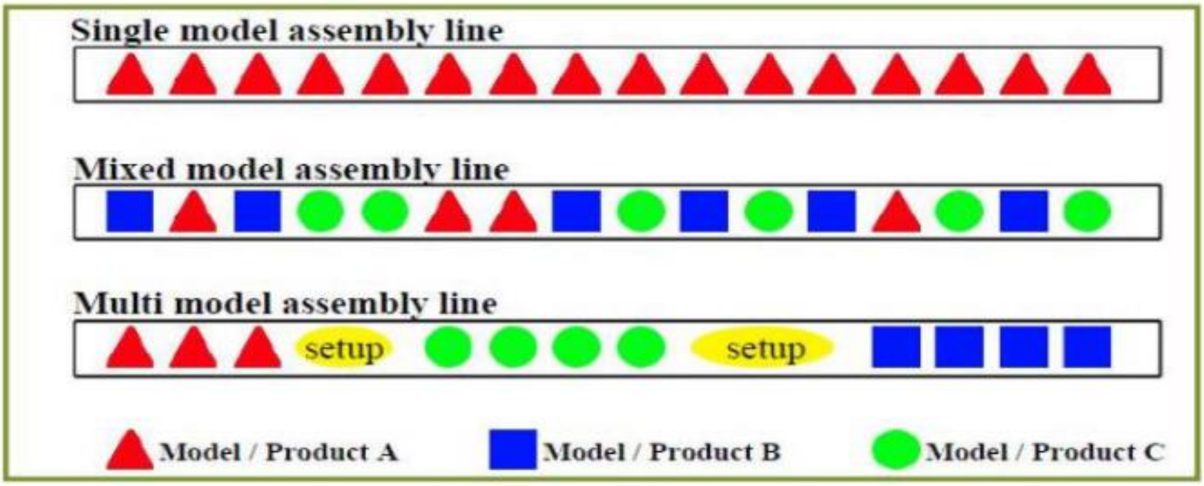

Figure:2. 1. Assembly line for single and multiple models(Melkamu, 2021).

Conclusion of the researcher's findings in this assembly line balancing by selection of production line model based on product type and numerous research conducted throughout the production output of each product performance evaluation and without taking limitations like precedence relations into consideration.

2.7. Line Balancing Problem

For a given a set of manufacturing tasks and a specified cycle time, the classical line balancing problem consists of assigning each task to a workstation such that: (1) each workstation can complete its assigned set of tasks within the desired cycle time, (2) the precedence constraints among the tasks are satisfied, and (3) the number of workstations is minimized. The precedence relations among activities in a line balancing problem present a significant challenge for students in formulating and implementing an optimization model for this problem (Ragsdale & Brown, 2004). Line balancing operates under two circumstances:

1. **Precedence Constraint:** Products cannot progress to other station if it doesn't complete necessary task at that station. It should not across other station because certain part needs to be performed before other activities.
2. **Cycle time Restriction:** Cycle time is maximum time for products spend in every workstation. Different workstation has different cycle time.

2.8. Key Terms in Line Balancing Technique

There is range of terms used in assembly line balancing system. Each of them has their meaning and purposes.

Table:2. 1. Key Terms in Line Balancing Technique

S. No.	Key term	Description	Measure figure
1	Cycle Time	Maximum amount of time allowed at each station. This can be found by dividing required units to production time available per day. This is the time expressed in minutes between two simultaneous products coming of the end of production line.	Time
2	Lead Time	Summation of production times along the assembly line.	Time
3	Bottleneck	Delay in transmission that slow down the production rate. This can be overcome by balancing the line.	OEE
4	Task Precedence	It is the sequence by which tasks are carried out. It can be represented by nodes or graph. In assembly line the products have to obey this rule. The product cannot be moved to the next station if it doesn't complete at the previous station	#unit in queue
5	Idle time	A period when system is not in used but is available.	Time
6	Productivity	Defined as ratio of output over input. Productivity depends on several factors such as workers skills, jobs method and machine used.	Output per input
7	Takt times:	The time needed by competent worker or unattended machine to perform a task. This is usually expressed in minutes.	Time
8	Work station:	A physical area where a worker with tools / one or more machines or unattended machines such as robot perform specific task in a production line.	Worker with tools per each task
9	Downtime	Downtime explained as the time that is non-value added. (Setup time, make-ready time, breakage, planned maintenance etc…).	Time
10	Line efficiency	Total minutes produced by the line *100 /total minutes attended by all operators	

Conclusion of the above Research on line-scale performance improvement involves analyzing the contents of articles published in international journals and researchers discussing performance improvement through line-scale techniques. The literature sample includes articles published in international journals that specifically focus on the performance improvement of linear balancing techniques.

2.9. Line Balance Efficiency

Line balancing is very effective technique in improving productivity; for example in Bangladeshi garment industry labor productivity was increased by 22% with the application of line balancing techniques (Yemane et al., 2020). In order to solve a line balancing procedure, many researches has come up with similar procedures. This is the procedures listed by (Munizzi, 2013).

I. Drawing Precedence Diagram: Precedence diagram needs to be drawn to demonstrate a relationship between workstations. Certain process begins when previous process was done.

II. Determining Cycle Time: Cycle time is longest time allowed at each station. This can be expressed by this formula:

This means the product needs to leave the workstations before it reaches its cycle time.

Cycle time (CT) = $\frac{\text{Total Opratinon Time}}{\text{Quantity of Production Produced}}$ …………………… (1)

III. Assigning tasks to workstation: The tasks distributions should be taken after completing a time cycle. It is good to allocate tasks to workstation in the order of longest task times.

NO. Of workstations (N) = $\frac{\sum \textit{Task Time}}{\text{Cycle Time}}$ …………………………… (2)

IV. The long-term effect of balancing decisions means that the objectives need to be carefully chosen considering the strategic goals of the enterprise. However, measuring and predicting the cost of operating a line over months or years and the profits achieved by selling the products assembled is complex and besides it is very likely to involve big errors, it has big costs associated. A usual surrogate objective consists in maximizing the line utilization which is measured by the line efficiency E(Tiago, Covas, Gomes, et al., 2014). The formula is given by:

Line efficiency (E) = $\frac{\textit{Total Work Content}}{\text{Number of Workstations x Longest Operation}} * 100$ ………… (3)

Conclusion of line balance is the modification of the capacity of a line ladder for a particular model mix. The number of tasks and the number of individual capacities in the line segments establish the capacity of the line hierarchy. The number of materials, the rate at which the materials are produced, and the rate routings according to which the materials are produced determines the model mix. It is described by experts as line balancing," which is the leveling of the workload across all operations in a line to eliminate blockage and surplus capacity.

2.10. Performance

All companies strive for better performance, since a high performance level means greater competitiveness, which in turn generates more money. However, there are an extensive number of changes and improvement methods described in many different research fields. Moreover, a number of issues, which are linked to these Performance Improvement Methods, have been identified (Grünberg, 2007). Performance of a manufacturing firm can be defined in various ways depending on the questions in mind when we inquire to know about a firm's performance. From a socio-economic perspective, profit is the most common measure of a firm's performance. Other indicators include internal rate of return, productivity, superior quality and reliability, flexibility, efficiency, effectiveness, capacity utilization, growth of output and net present value, and market share. In another way, manufacturing performance is defined as the relationship between the quality and quantity of physical outputs in relation to inputs used in the production process. This definition of manufacturing performance reflects the basic rationale for a production system, which is to produce something of value (Cherkos, 2016).

In the production system, the resources (raw materials, humans, machines, equipment, etc.) are always limited. Manufacturing companies need to produce cost-effective final products in a short lead-time failure to do this may result in a lack of competitiveness and ultimately to the demise of the organization(A. Mulugeta, 2020).

2.11. Key Performance Indicators

Key performance indicators (KPIs) are criteria that help to evaluate the performance of a system. They can be used as an important decision-making tool for the manufacturing process or operations. They can also assist industrial decision-makers in making their decisions more effective and efficient (Moktadir et al., 2021). List out Key performance indicators are: -Throughput rate, Flow time (also known as transit time or lead time), Cycle time, Processing time, Work in process and cost.

2.12. Manufacturing Performance Measurement

A performance measure is defined as a metric used to quantify the efficiency and/or effectiveness of an action. Performance Measurement System (PMS) is defined as the set of metrics used to quantify the efficiency and effectiveness of action. A successful PMS is a set of performance measures that provides the company with useful information that helps to manage, control, plan and perform the activities undertaken in the company (Tangen, 2004). Therefore, the basic concept of performance measurement involves (a) planning and meeting established operating goals/standards; (b) detecting deviations from planned levels of performance; and (c) restoring performance to the planned levels or achieving new levels of performance. Performance measures help to understand and improve one's performance. If an activity cannot be measured, it cannot be controlled, it cannot be managed, and eventually it cannot be improved; i.e., without dependable measurements, intelligent decisions cannot be made. Hence, performance measurement is a prerequisite to performance improvement (Cherkos, 2016).

In order to find more appropriate performance measurement and improvement methods and cope with these significant competitive issues of complex management practices, increasing globalization and product differentiation, dynamic customer need a number of researches have been conducted (Kassaneh & Workalemahu, 2018).

Throughout history, performance measures have been used to assess the success of organizations. To achieve sustainable business success in the demanding world marketplace, a company must use relevant performance measures. Performance measures of manufacturing systems are: Manufacturing lead time (MLT), Work in process (WIP), Machine utilization, Throughput, Capacity, Flexibility, Quality and Cost (N. Mulugeta, 2014).

I. Manufacturing Lead Time

Manufacturing is a transformation process that converts raw materials into quality products and that the process of manufacturing consists of a sequence of machining and assembly operations. In between these operations, non-value adding operations are performed. Ideally, we would want to eliminate these wasteful operations or at least minimize the time that a part spends in a manufacturing system. There are two variants of lead time: Manufacturing lead time (MLT) and Total lead lime (TLT)(N. Mulugeta, 2014).

The manufacturing lead time (MLT):- is the sum of setup time, processing time, and non-operation time. Production lead-time (PLT) is the sum of design time, manufacturing planning time, manufacturing control time, and MLT (Jaff & Ivanov, 2015). Factors of manufacturing lead time are Process time, Setup and move time, Transfer batch sizes, Variability, Work station utilisation, Factor interaction, queue, wait-in-batch and wait-to-match time (Jaff & Ivanov, 2015).

The total lead time (TLT) of a product is the total time elapsed from the instant at which raw materials are ordered until the instant the finished product is delivered. Ideally, MLT should be equal to the actual machining and assembly time. This is possible with zero inventories, zero material handling, zero setup time, zero defects, zero breakdowns and a batch size of one. The TLT is a complex quantity since it involves procurement, vendor, manufacturing; engineering, tooling and customer lead times. Here we focus on manufacturing lead time (MLT)(N. Mulugeta, 2011).

Components of manufacturing lead time: When we focus on manufacturing lead time, we assume that raw materials are currently in stock (the procurement lead time is zero and we have made these items before, we have the design, the process plan and the necessary equipment in hand). The five components that comprise manufacturing lead time are: standard time, process time, setup time, activity time, and queue time.

Standard Methodology

Standard methodology, involving both direct and synthetic measurement procedures such as time study, work sampling, standard data, predetermined time system and physiological measures, are the measurement tools available to current industrial engineer. From this work measurement tools time study is selected for this study because of ease of use and mostly applicable in manufacturing industries. Average worker: the typical worker, or a worker representative of all workers normally performing the work under study (Manaye, 2019).

Developing standard time

The following procedures and equations have been adopted from (Manaye, 2019).

1. Take individual time observation for each task.

2. Determine the number of cycles to be timed using a formula with 95% confidence level and 5% accuracy level.

3. If the value of N is more than the sample taken, additional sample has to be taken again.

4. Calculate average actual time by the following formula.

$$\text{Tav} = \frac{Total\ time}{Number\ of\ sample} \text{……………………………………………………….….Eq. (4)}$$

5. Find normal time with respect to rating factor (wasting-house system of rating SECC) using. Normal time = average actual time *performance rating factor …………….Eq. (5)

6. Calculate the standard time in consideration to allowance. Using

Standard time = normal time + allowance…………………………………eq. (6)

7. Allowance: fixed allowance (personal and fatigue), variable allowance, contingency allowance, and special allowance. Personal allowance: for physical needs like drinking water, taking tea, visiting toilet, and trip to dressing room, Mostly 5% Fatigue allowance: for physical or mental tiredness. Common figure is 4%. (ILO1992), Variable allowance: add for relaxation. Mostly from (2-3%), Contingency allowance: added for unexpected item of work or delay (1-5%), Special allowance: periodic activity allowance (like maintenance of machine). Not more than 5%, and Allowance range = (15 - 20%).

8. For having 95% confidence level with ±5% accuracy in time study N=

The Standard Time is the product of three factors:

- ✓ **Observed time**: The time measured to complete the task. The exact amount of time that the operation process is completed and also during record the processing time it's better to record 10 times to 15 times of the single given process (Melkamu, 2021).

As the observed time is one of the factors used in determining the standard time, it can be derived from the following formulae (*Chegg*, n.d.):

Standard time= (Observed Time) *(Rating Factor) (1+PFD Allowance) …………Eq (7)

The other formulae which can be used is:

$$\text{Standard Time} = \text{Normal Time} + \text{Allowance}$$

where $\text{Normal Time} = \text{Average Time} \times \text{Rating Factor}$ Thus, the formulae of the observed time can be taken out of the standard time formulae.

The formulae used for determining the observed time is:

$$\text{Observed Time} = \frac{\text{Standard Time}}{(\text{Rating Factor})(1+\text{PFD Allowance})}$$ ……………………………… Eq (8)

Performance rating: is the value describing the rate at which an operator is performing and a value of 100 is given for a standard rate at normal condition, but there is less in normal conditions in any manufacturing company sectors and most of the company used as the standard performance rating is between 85 % - 100% with it depend on the existed conditions of the sectors. Now it was time to rate the operator at what performance level he was doing the job, seeing his movement and work speed and the performance of the workers it depends and determined through unskilled, semiskilled and skilled of the workers(Melkamu, 2021).

- ✓ <u>Personal, fatigue, and delay (PFD) allowance</u>.

Basic time = observed time *rating/standard rating

Table:2. 2. Performance rating calculation example

Observed time (min)	Rating	Basic time
0.16	*120	= 0.20
0.20	*100	= 0.20
0.25	*75	= 0.20
0.16min*125/100 = 0.20		

The basic time (0.20 minutes in the example) represents the time would take to perform if the operative were working at the standard rate, instead of the faster, one actually observed (0.16min). If the operative were judged to be, working more slowly than the standard, a basic time less than the selected time would be arrived at.

For example: 0.25min*80/100 = 0.20min

Standard Rating and Standard Performance

Rating**: -**is the assessment of workers rate of working relative to the observer's concept of rate corresponding to standard pace. Workers will naturally achieve without over exertion as an average over the working day or shift provided that they know and adhere to the specified method or provided that they are motivated to apply themselves to their work. The unskilled operative puts in a lot of unnecessary movements, which the experienced operative has long since eliminated.

Table:2. 3.The Commonly Used Rating Scale REF: introduction to work study – (ILO, 1992)

Rating Scale	Description
0	No activity
50	Very slow; clumsy; fumbling movements; operative appears half – asleep with no interest in the job.
75	Steady; deliberate; unhurried performance; as of a worker not on piecework but under proper supervision; looks slow; but time is not being internationally wasted while under observation.
100 "Standard rate"	Brisk, business like performance, as of an average qualified worker on piecework, necessary standard of quality and accuracy achieved with confidence.
125	Very fast, operative exhibits a high degree of assurance, dexterity and co-ordination of movement, well above that of an average worker.
150	Exceptionally fast, requires intense effort and concentration, and is us-likely to be kept up for long periods, a performance achieved only by a few outstanding workers.

i. **Processing time:** Processing time is the actual time spent on processing the manufacturing operation like machining, etc. Queuing and transport times account for the rest of the manufacturing lead time.

ii. **Setup time:** Setup time or changeover time is the time required by a machine or a system manufacturing one product type to switch to another product type. The setup time generally includes time required for fixing, tool changing and preparing the work piece. To minimize the setup time and costs, a batch of products is manufactured after a single setup. However, large batch size results in high inventory levels.

iii. **Move time:** The moving of work pieces could be within the machine shop, within a factory, across factories or between various subcontracted processes performed by the vendors. Small batch sizes imply more number of moves between machine processes for the same production target. The need then would be for a smart material handling system that can make a large number of deliveries of small loads in a short time. The best material handling is no material handling and optimal move time is zero move time. Three ways to reduce transport times: creating versatile computer-controlled machine centres with automatic tool changers capable of performing a variety of processing operations, adapting product layouts or cellular layouts based on group technology principles, and using more efficient transfer mechanism such as belt conveyors, forklifts, chutes and smart AGVs that can make faster delivery of unit loads.

iv. **Queuing time:** Queuing times or waiting time before the resources such as machine centres, AGVs, etc., are the longest elements that make up the MLT. Queues occur before machine centres and AGVs because there are almost always jobs waiting to be processed by these resources. The queue length is proportional to the amount of work in process (WIP). The three contributory factors for long queues include inadequate capacity, erratic flow and poor part release policies.

v. **Work in Process (WIP):** Work in process (WIP) is the amount of semi-finished product currently resident on the factory floor. A semi-finished product is either being processed or is waiting for the next processing operation. Inventories are also seen as the insurance buffer against various uncertainties induced by delayed supplies, machine breakdowns, absenteeism and uncertain customer orders. Inventory is the evidence of poor design, poor forecasting, poor coordination and poor operation of the manufacturing system. WIP should be low.

vi. **Machine Utilization:** High machine utilization is assumed to be good because it amortizes the cost of the machinery faster. Idle time is supposed to be bad since high-priced equipment does not produce anything. Trade off, which one would benefit business more? Idle machine asset or idle inventory asset. Effective resource utilization is to run the machine to manufacture exactly the right quantity of exactly the right things at exactly the right time.

vii. **Throughput:** For a manufacturing system, the throughput is generally expressed as an hourly or daily production rate (i.e., the number of parts produced per hour or day). The reciprocal of the throughput or production rate is the production time per unit of the product. For transfer lines the throughput approximates the reciprocal of the cycle time (transfer time longest operation time).

viii. **Capacity utilizations:** The term capacity, or plant capacity, is used to define the maximum possible output of the transformation process the plant is able to produce over some specified duration. For continuous plant, the duration is 24 hours a day, 7 days a week, whereas for an automobile plant the capacity is defined over a shift period.

$$capacity\ utlization\ = \frac{\text{Actual output (AO)}}{potential\ out\ put(PO)} \ldots\ldots\ldots\ldots\ldots\ldots\ldots\ldots \text{Eq.(9)}$$

ix. **Flexibility:** A flexible system is one that is able to respond to change, and flexibility is the ability of the system to respond effectively to change. Flexibility is fundamental to achieve competitiveness. In general, high degree of flexibility requires higher levels of automation and more investments. However, such a system will be an adapting organism capable of surviving in uncertain and changing markets. Changing circumstances include both internal and external changes. Internal changes or disturbances include breakdown of equipment, variability in processing time, work absenteeism and quality problems. External changes are typically changes in design, demand and product mix. The ability to cope with internal changes requires a degree of redundancy in the system, whereas the ability to cope with external changes requires that the system should be versatile and capable of producing a wide variety of part types with minimum changeover times and costs to switch from one product to another.

x. **Quality:** Maintenance of high quality requires conscious efforts in various stages in design and manufacture. The effects of total quality control (TQC) are “fewer rework labour hours” and “less material waste” in addition to higher quality of finished goods. Thus good quality is not expensive but actually increases productivity, because so many costs such as rework, scrap, inspection, customer returns and warranty costs are all avoided with quality improvement. Continual improvement is a must since what was good last year would not make the grade this year.

xi. **Cost:** This includes decreasing the total cost of production by reducing value adding cost, non-value adding cost, holding cost, waiting cost, material handling cost, and other costs (Mulugeta, 2014).

2.13. Modeling and Simulation in Line Balancing

Modeling and simulation is a problem-solving methodology for analyzing complex systems (Hailemariam, 2009). The term “Simulation” refers to a broad collection of methods and applications to mimic the behavior of a real system. Simulation is a particular approach to studying models, which are fundamentally experiential or experimental. Simulation can be used to model both conceptual and existing systems (A. Mulugeta, 2020). The model can be used to:

- Analyze current operations and identify problem area, e.g. bottlenecks,
- Test various scenarios for improvement,
- Design new manufacturing systems.

Purposes, simulations are better than real data analysis. With real data, due to the very complex interactions in large systems, it is almost impossible to know exactly what real-world process caused a particular measured situation. In a simulation, the analyst controls all the factors making up the data and can manipulate them systematically to see directly how specific problems and assumptions affect the analysis. Because simulation software keeps track of statistics about model elements, performance can be evaluated by analyzing the model data (Hailemariam, 2009).

Simulation is one of several alternative methods of analyzing systems. Another technique is the use of mathematical analysis. Analytical modeling involves building a system description using some formal, mathematical notation. Unfortunately mathematical analysis is limited to a relatively small number of simple systems and the opportunity to represent manufacturing systems in this way is felt to be limited (N. Mulugeta, 2011).

Simulation in general is to pretend that one deals with a real thing while really working with an imitation. The imitation is a computer model of the simulated reality. It is very costly, dangerous and often impossible to make experiments with real systems. So that models are very important to describe reality, experimenting with them can save money, suffering and even time. This is done by developing a simulation model of the system. The model is based on a set of assumptions on the real system behavior, and on the workload driving the system. A correct and validated simulation model in fact can substitute the real system as long as the underlying assumptions are met.

In general, simulation is a practical methodology for understanding the high-level dynamics of a complex manufacturing system. Simulation has several strengths including:

- Time compression: the potential to simulate years of real system operation in a much shorter time,
- Component integration: the ability to integrate complex system components to study their interactions,
- Risk avoidance: hypothetical or potentially dangerous systems can be studied without the financial or physical risks that may be involved in building and studying a real system,
- Physical scaling: the ability to study much larger or smaller versions of a system,
- Repeatability: the ability to study different systems in identical environments or the same system in different environments, and
- Control: everything in a simulated environment can be precisely monitored and exactly controlled.

On the other hand, simulation has a weakness to imitate the actual manufacturing process one hundred percent for the inconsistent variables, which cause a percentage of an error. As well, it does not take into account human error or skills which are difficult to measure; therefore, it is considered as qualitative data (A. Mulugeta, 2020).

Concluded that simulation's long-standing flaws Model preparation because each simulation model reflects a different system, the solutions cannot be used to examine other choices; there is not a solution that works in every circumstance. As a result, alternatives can be prepared. They produce solutions to queries about particular conditions by using simulation models and experiments.

2.14. Application of Simulation Modeling in Manufacturing Processes

Applications of simulation can be categorized broadly into two. The first one is the so-called man-in-the-loop simulations that are used for training and/or entertainment. The second category includes the design and analysis of objects and manufacturing processes. It is the technical category in which engineers and operations researchers are most commonly associated with simulation (A. Mulugeta, 2020).

Based on state of the system simulation can be categorized as using either a continuous or discrete time representation. Systems may have discrete or continuous state. In some systems, the state changes all the time, not just at the time of some discrete events. For example, the water level in a reservoir with given in and outflows may change all the time. In such cases, "continuous simulation" is more appropriate. Discrete event simulation has applications in a wide range of sectors including automotive, healthcare, defense, electronics, pharmaceuticals, food and beverages, packaging, construction, footwear manufacturing and logistics. Manufacturing, industrial and service sectors have been the most common fields of simulation applications (N. Mulugeta, 2011).

2.15. Conceptual Framework

A conceptual framework is an analytical tool with several variations and contexts. It can be applied in different categories of work where an overall picture is needed. It is used to make conceptual distinctions and organize ideas. A conceptual framework illustrates the expected relationship between your variables. It defines the relevant objectives for your research process and maps out how they come together to draw coherent conclusions. In this study, improving the Performance of the Footwear Manufacturing Industry is the dependent variable with Line Balancing problems of dependent variables and the independent variables are line efficiency, setup time, work-in-process inventory, throughput, and cycle time, as shown in table 2.2.

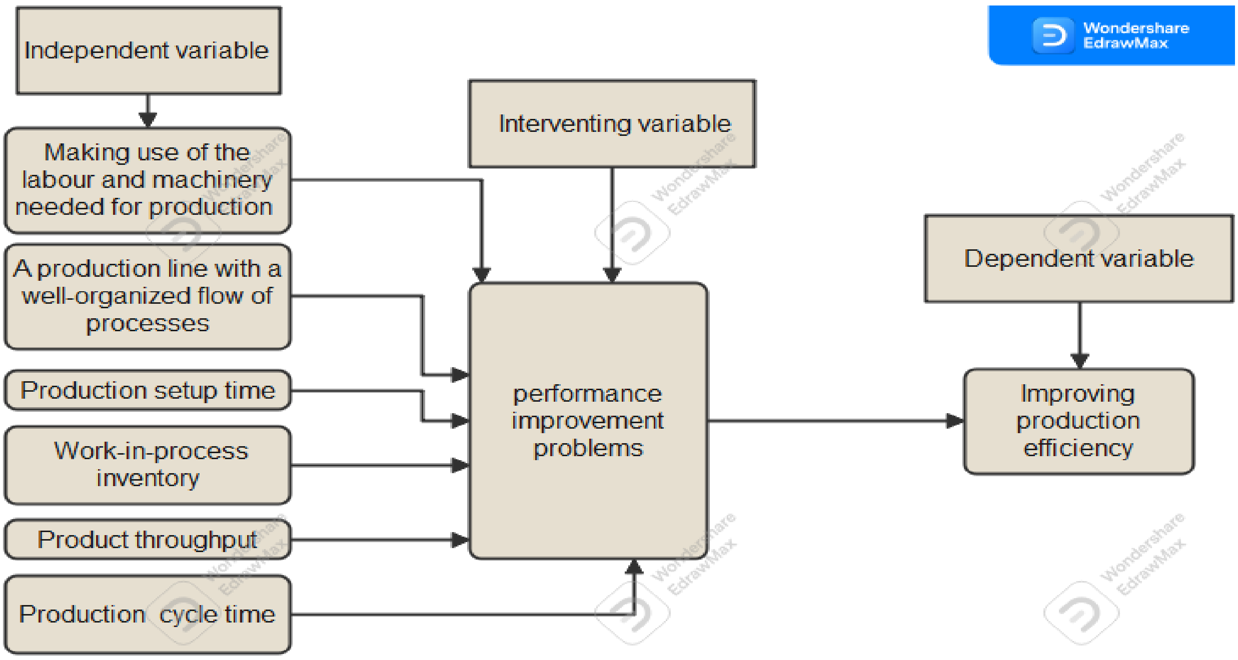

Figure:2. 2. Conceptual framework for production performance improvement (Source own)

In general, it should be noted that some of the conceptual frameworks that are now utilized in the field of performance assessment have only been briefly examined in this section.

2.16. Literature Summary and Gaps

2.16.1. Literature Summery

In the literature, parts of fundamental practices and ideas regarding performance improvement and line-balancing techniques have been discussed in response to the first research question. However, the studies carried out to expose the relationship between line balancing efficiency and improvements in business performance are limited to the footwear industry. Therefore, this research to improve production performance and different authors about performance improvement and line balancing to suggests different ideas and propose optimizations mode. It shows table 2.4 below.

Table:2. 4. Summary of research outcomes and publisher

Sr. No.	Author and publisher	Research title	Objective/ Description	Performance improvement technique	Finding	Research Approach
1	Grunberg.T, 2007	A Method To Support Performance Improvement In Industrial Operations	Develop and evaluate a method, which supports performance improvement in industrial operations.	Operation research	Scientifically evaluated Performance Improvement Method.	Research paper
2	Cherkos ,2016	Company-wide Process-based Performance Evaluation in Ethiopian Leather Footwear Industry	Assessing the performance of Ethiopian LFI and then specifically identifying the critical company-wide process-based performance problems, which later on need special attention to bring improvement in the sector.	SQC tools	The Ethiopian foot wear factories are highly recommended to focus on the identified and summarized process based problems as these are internal factors in which the firms can easily solve than the external sector wise factors.	Case study
3	Md. Niat & Kazi, 2021	Assembly Line Balancing to Improve Productivity	Improving overall efficiency of single model assembly line by reducing the non-value added activates, cycle time and distribution of work load at each workstation by line balancing.	work shearing method	Improving overall efficiency of single model assembly line by reducing the non-value added activities, cycle time and distribution of work load at each work station by line balancing	Research Journal
4	James &Yung, 2021	Simulation Modeling and Analysis for Stitching Line of Footwear Industry	To construct simulation model for stitching line of footwear factory and Justifying that line configuration has better impact to performance parameter through experimental simulation.	Simulation model	Factorial design analysis shows that the usage of 2-lines is more beneficial than 4-lines as it yields higher Unit per Man Hour (UPMH).	Case study
5	H.Jay & R.Barry, 2006		Maximizing line throughput, minimizing the number of stations, maintaining a balance of work across stations, satisfying delivery rates and accommodating product mix changes.	Literature		Literature
6	Wu,2017	A simulation-based approach for solving assembly line balancing problem	To balance the assembly line, the first and foremost task is to improve the production efficiency, to increase the profits of enterprises, and to reduce the production cycle; Secondly, the balanced assembly line can improve product quality.	A simulation based approach Mathematical model	Beat time and the number of stations based on the assembly line to optimize the layout to improve production efficiency.	Article
7	Parisa,2015	Balancing and lot-sizing mixed-model lines in the footwear industry.	To consider a new and advanced (stitching) line and devising balancing and lot-sizing solution methods to au5tomatically find good results in a short time To keep an exact module in the algorithm for balancing makes it more flexible and easier to be adapted to model extensions.	approximate methods	Impact of having deferent lots in production the initial maximum amount for each lot is changed and a Tabu Search based procedure	Research paper

8	Mohamed, et al., 2017	Line Balancing Techniques To Improve Productivity.	To improve overall efficiency of single model assembly line by reducing the bottleneck activities, cycle time and distribution of work load at each workstation by line balancing, using line balancing techniques.	work sharing method	Using code blocks (c++) based on statistical techniques is an effective method for balancing the complicated production lines in the real industrial cases.	Research Journal
9	Lim, 2002	Improving productivity through line balancing.	To improve the productivity of a manufacturing company by improving the line balancing of one of its assembly lines.	Simulation Model	The robustness of these solutions against the varyingly important Parameters should also be considered.	Research Journal
10	Garoma & Mulugeta, 2021	Modeling and Performance Analysis of Manufacturing Systems in Footwear Industry.	To solve the assembly line balancing problem (ALBP) with different scenarios to improve the efficiencies in footwear industry by concentrating on the stitching assembly line and lasting assembly line, which lines are the major bottleneck section in footwear production.	Arena simulation software	Improvement of assembly line balance efficiency in the production systems.	Research Journal
11	Cherkos ,2014	Performance Analysis and Improvement of Ethiopian Leather Footwear Factories.	To assess the performance of Ethiopian leather footwear factories, analyses the existing performance practices and propose appropriate performance improvement method to improve its global competitiveness.	Develop an implementation guideline	Develop performance measurement framework/scorecards and its implementation guideline	Research paper
12	Mulugeta, 2014	Assembly line modeling and simulation of footwear manufacturing.	To identify ways by which the Performance of footwear manufacturing process could be enhanced leading to a cost effective and efficient system.	Simulation and modeling	Different scenarios are proposed to solve observed problems of the existing manufacturing System for moccasin shoe product type.	Research paper
13	A.Habib,et al.,2015	Performance Improvement by Scheduling Techniques.	To improve the performance of the case company using scheduling techniques.	Sequencing rules and Johnson's algorithms	Reduction of machine idle time &make span	Case study
14	Mulugeta A, 2020	Production Performance Improvement by Simulation of a Footwear Manufacturing System	To explore the bottleneck causes of capacity underutilization, identify appropriate approaches for performance improvement, and experiment with the validity of the approaches using simulation.	Simulation and modeling	Different scenarios are proposed to solve observed problems of the existing manufacturing System for Tikur Abbay Shoe S.C.	Research paper
15	Moti Melkamu, 2021	Enhancing the productivity Of the Footwear Industry Through Work Measurement and Line Balancing Techniques	To enhance the productivity of the footwear industry through work measurement and line balancing techniques in the case study of the ASSC.	Flex Sim 2021 software	Reduced total of unwanted movement distance with a time, cycle time, number of operation (station), and number of the labour on Anbessa shoe shear company.	Research Paper

Based on the above research, objectives and improvement methods to solve line-balancing problems were further examined and evaluated by using the following performance improvement analysis. Such as simulation software and modeling, Develop an implementation guideline, a work sharing method, operation research (mathematical modeling), and SQC tools. Accordingly, different related researches have been done in the manufacturing system modeling and performance analysis areas, and these researches have been properly reviewed. Reviewing all of them is difficult, but the author has tried to review and discuss some of them, which are published and presented in different journals, case studies, and thesis papers. The revision and discussion are based on areas addressed in the past and methods used.

2.16.2. Literature Gaps

In order to identify where the gap is, this research study classifies it into two categories: the knowledge gap in literature in the field of performance improvement through line balancing and the shoe factory implication practice gap. In order to reduce the number of stations while satisfying cycle time, precedence, location, distance minimization, and station-type constraints, many researchers studied performance or productivity improvement using simulation software, work shearing methods, and operation research on single model and moccasin shoe multi-model shoe factories. A simulation model developed by simulation can create a well-balanced line that has the flexibility to hit targeted throughput consistently. Moreover, an optimization model developed using simulation software provided insight into the cost-effectiveness of the proposed simulation models in all of the above departments.

Therefore this research try to fill the gap that are not considered in manufacturing system modeling and line performance so it is believed that the research will add some value to the existing knowledge. Literature gaps are assembly line operations, where it can identify processing time, system bottlenecks, run different model type schedules, minimize idle time at each workstation and assembly line data at a time, which is an untouched area of the subject matter by any other researcher in a multi-model production line for non-moccasin shoe production. Improve line performance targets with batch-model lines (multiple parallel lines) preferred in order to meet the variety of products that are highly demanded per year and to solve bottlenecks of the cutting, stitching, and finishing sections.

2.17. Overview of Anbessa Shoe Share Company

The Ethiopian leather and leather products industry has existed since the 1920s and dominated the country's limited manufactured exports until the 1990s. Foreigners, mainly Armenians, originally owned almost all firms in this sector. The first shoe factory, Darmar, was founded in 1927, and the first tannery (Asco) was established in 1925. Anbessa Shoe Share Company is the oldest shoe manufacturing enterprise in Ethiopia.

An Italian expatriate established the company in the 1930s. It obtained a measure of goodwill by the 1950s, when it was known by the name DARMAR. It introduced industrial machinery and made shoes available for men, women, and children. In the mid-1970s, the manufacturing facilities were nationalized by the Derg regime. The company was privatized again in 2012 and purchased by the current owner, Ato TedlaYizengaw. At the time of privatization, the company had 800 employees and was making significant losses.

Now the company is profitable, has expanded its workforce to 1,340, and has increased production because of restructuring, machinery upgrades, and improvements in systems and production layout. Anbessa's manufacturing facility is located in Addis Ababa and has about 33 outlets locally. Its main products are leather shoes (casual, military, and safety shoes), leather articles (bags, wallets, and belts), and outsoles. It serves both the domestic and export markets. Anbessa is a market leader, commanding approximately 65–70% of the local shoe retail business. It also contributes significantly to the generation of foreign currency for the country by exporting shoes to different parts of the world like the USA, EU, Middle East, Asia, and Africa.

The company is about 4 years away from completing a manufacturing expansion project, which will result in the current plant operations moving to a new site in the Akaki/Kaliti area. The new plant will be compliant with international best practices, thereby enhancing export potential. It will also improve production efficiency, capacity, and health and safety standards for staff. The new plant will enable the company to increase production as follows: Shoes: from 3,500 pairs per day to 10,000 per day, Handbags: from 20 to 120 pieces per day; belts: from 150 to 500 pieces per day.

The company is currently engaged mainly in the Lideta branch in the production of quality moccasin and non-moccasin men's shoes, children's shoes, and women's shoes for both the local and export markets, and the company has a wide range of shoes in a variety of styles and colors. ASSC has 720 employees, and it has an installed production capacity of 3500 pairs of leather shoes per day (single shift) in the old factory.

Anbessa Shoe Share Company uses both local and imported raw materials. Its local suppliers are Dire, Mojo, and Ethiopia Tannery for leather products; Kangaroo and Kadisco for foam and some chemicals; The Company sells its products both locally and internationally. It has its own distribution center for the local market in Addis Ababa and in the regions. The main competitors of the company are Peacock Shoe, Tikur Abaye, Shoe Share Factory, Tesfaye Beyene/Jamaica Shoe, Sheba Shoe Factory, Ras Dashen Shoe Factory, New Wing Shoe Factory, Bostex Shoe Factory, Huajine Shoe Factory, Ramsey, Kangaroo, Olibert Shoe Factory, Ethio Leather Shoe Factory, Modern Zege Shoe Factory, Crystal Shoe Share Factory, Wallia Leather and leather products, etc. This competition is vital for the company to produce quality products that can compete in the global market. Anbessa Shoe Share Company has a number of major production lines: cutting, stitching, lasting, bottoming, and finishing. Different works are performed in each line.

2.17.1. Cutting Production Line

Cutting of different shoe components is done by modern hydraulic cutting machines, and the parts to be cut are full grain cow leather for the upper, sheep lining leather, heel counter (Thermo Fortex), toe puff (Thermo Telex), and foam (spongy) components for a pair of shoes. The cutting process requires first preparing the material, then putting the die on the material, and finally pressing the die using the machine. The process flow diagram of cutting department illustrated below.

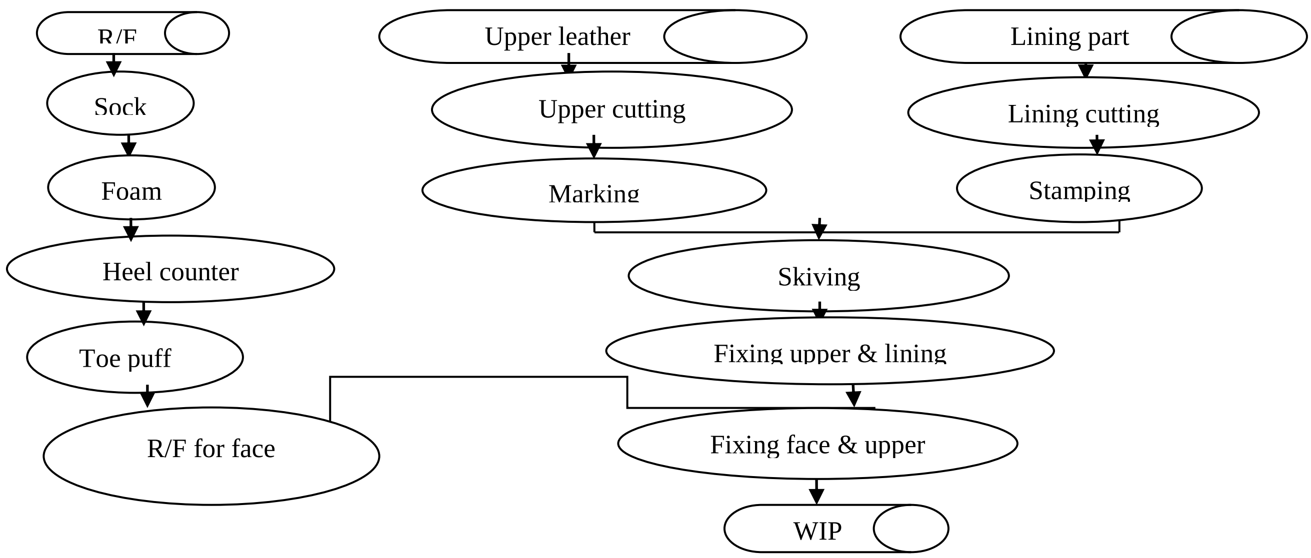

Figure:2. 3. Non-moccasin shoe cutting process flow diagram.

2.17.2. Stitching Production Line

Different types of flatbed, post-bed, and zigzag machines do the stitching of different components of the upper parts of shoes. Parts of shoes referred to as the vamp, tongue, apron, toecap, counter, and quarter stitched together. Every worker stitches one component at a time. The process flow diagram of the stitching department is illustrated below.

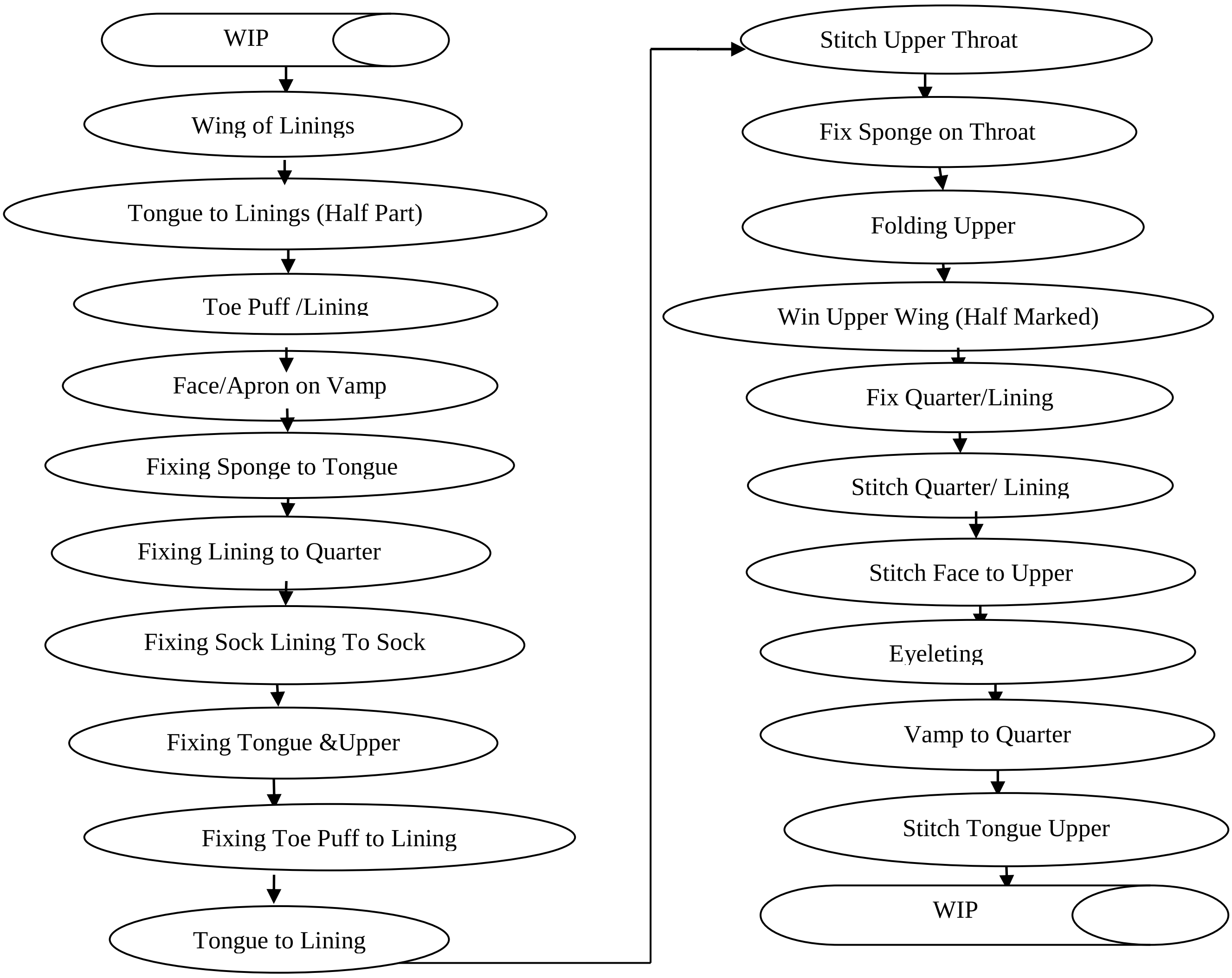

Figure:2. 4.Non-moccasin shoe stitching process flow diagram

2.17.3. Lasting Production Line

Automatic counter molding machines toe and side lasting machines does shaping the upper to the last. The main work performed in this department is the attaching of the upper, sole, insole, and other parts together. The process flow diagram of lasting department illustrated below.

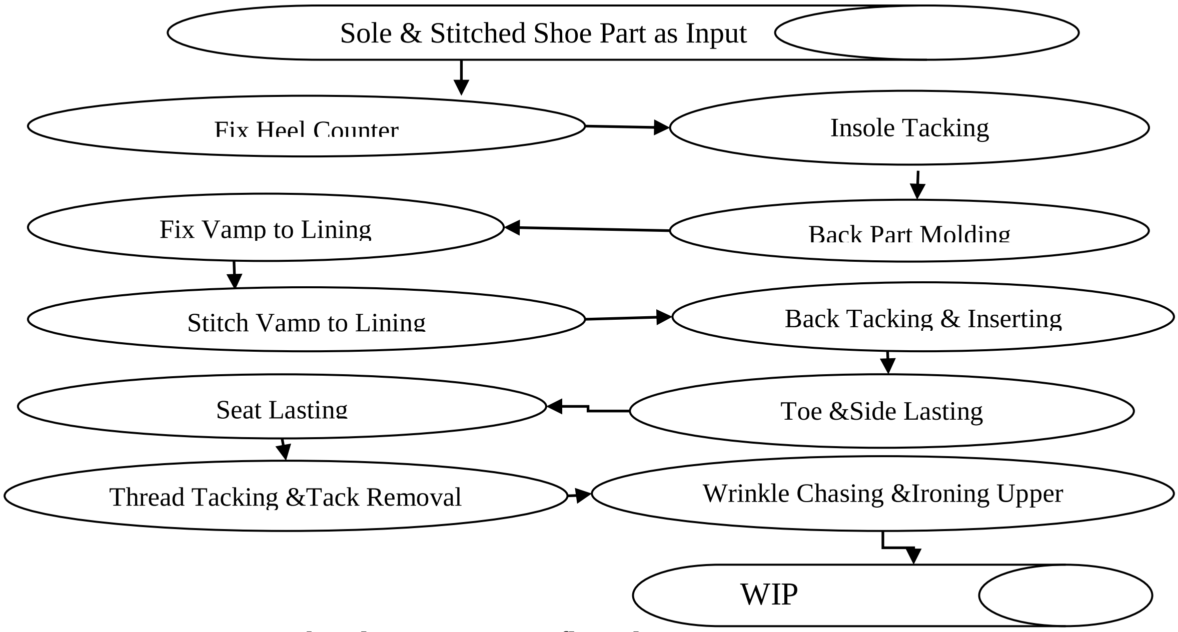

Figure:2. 5. Non-moccasin shoe lasting process flow diagram

2.17.4. Finishing and Packing Production Line

Bottoming Out: This is a process of attaching the lasted upper to the sole unit, attaching with modern roughing; sole attaching, pressing machines, and finishing processes comprise trimming, polishing, shoe lacing, and packing. The process flow diagram of the finishing department is illustrated below.

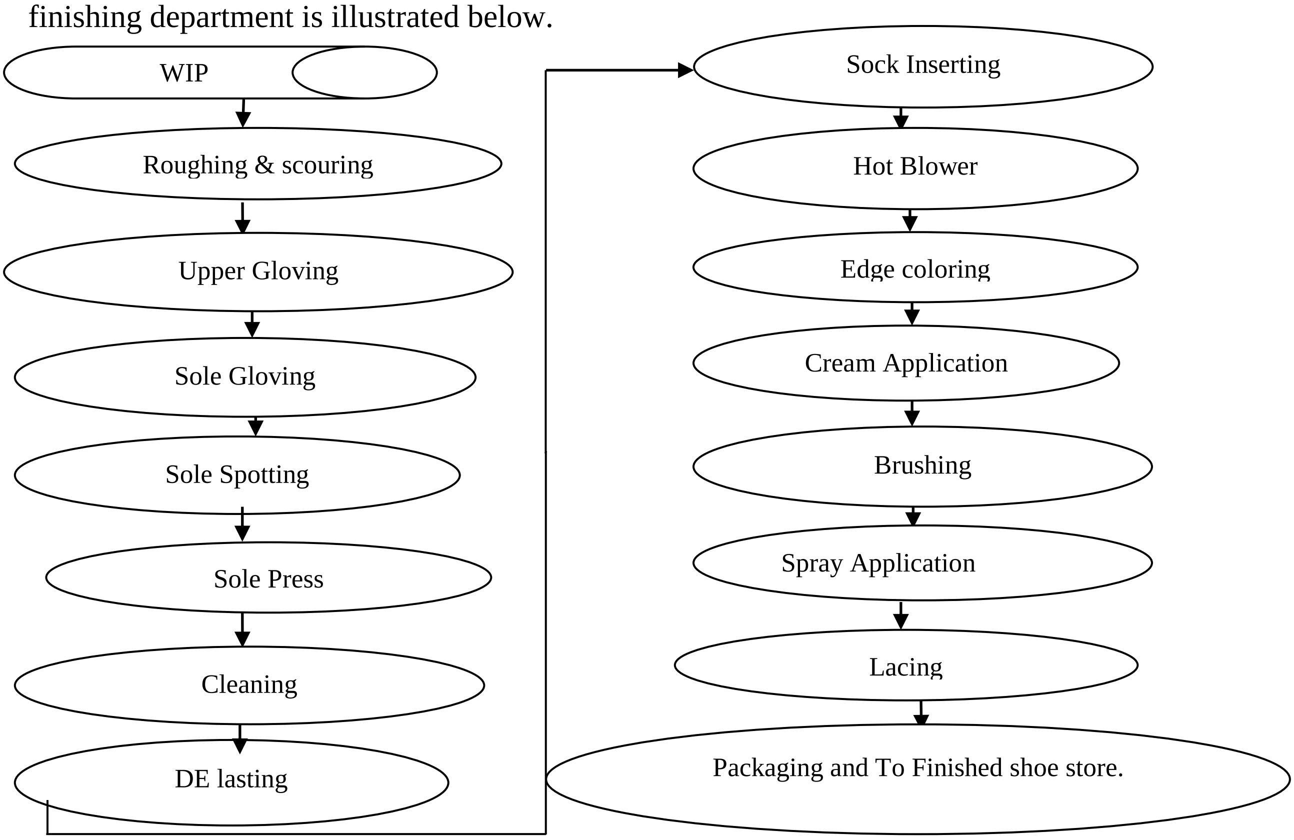

Figure:2. 6. Non-moccasin shoe packing/Finishing process flow diagram

Chapter Three

3. Research Design and Methodology

3.1. Introduction

This chapter discusses research methodology and details the general research design used to collect the data. There are two standard ways of gathering information from Anbessa Shoe Sharing Company for empirical research: Primary sources such as direct observation, measurement, and assessment, and secondary sources such as monthly and quarterly production reports of the company under review a quantitative approach was used for both data collection and data analysis. It is important to identify and understand the research approaches to be undertaken because they influence the research instruments to be employed and the ultimate goal of the thesis. In addition, its selection should be based on the problem of interest, the resources available, the skills and training of the researcher, and the integration of the following methods used to achieve the objectives of this paper.

3.2. Research Design

A research design is a structural framework for the many research methodologies and approaches that a researcher uses. The research design is divided into two separate views, namely Quantitative Research Design and Qualitative Research Design, taking into account its dynamics. Additionally, there are four essential aspects of research design: generalization, neutrality, validity, and reliability. A researcher should also grasp exactly how their project will fit within the research design. Consequently, the type of research I use in this study is quantitative research.

Different ideas and models of authors on performance improvement and line balancing techniques are assessed, gaps are identified, and opinions and solutions are discussed. Books as well as electronic information sources and the internet to obtain articles and journals are assessed to gain information on performance improvement and line-balancing techniques. The focus area of the data collection and review is the problems associated with line balancing techniques, their total losses of product on firm performance, and the proposed solutions to these problems.

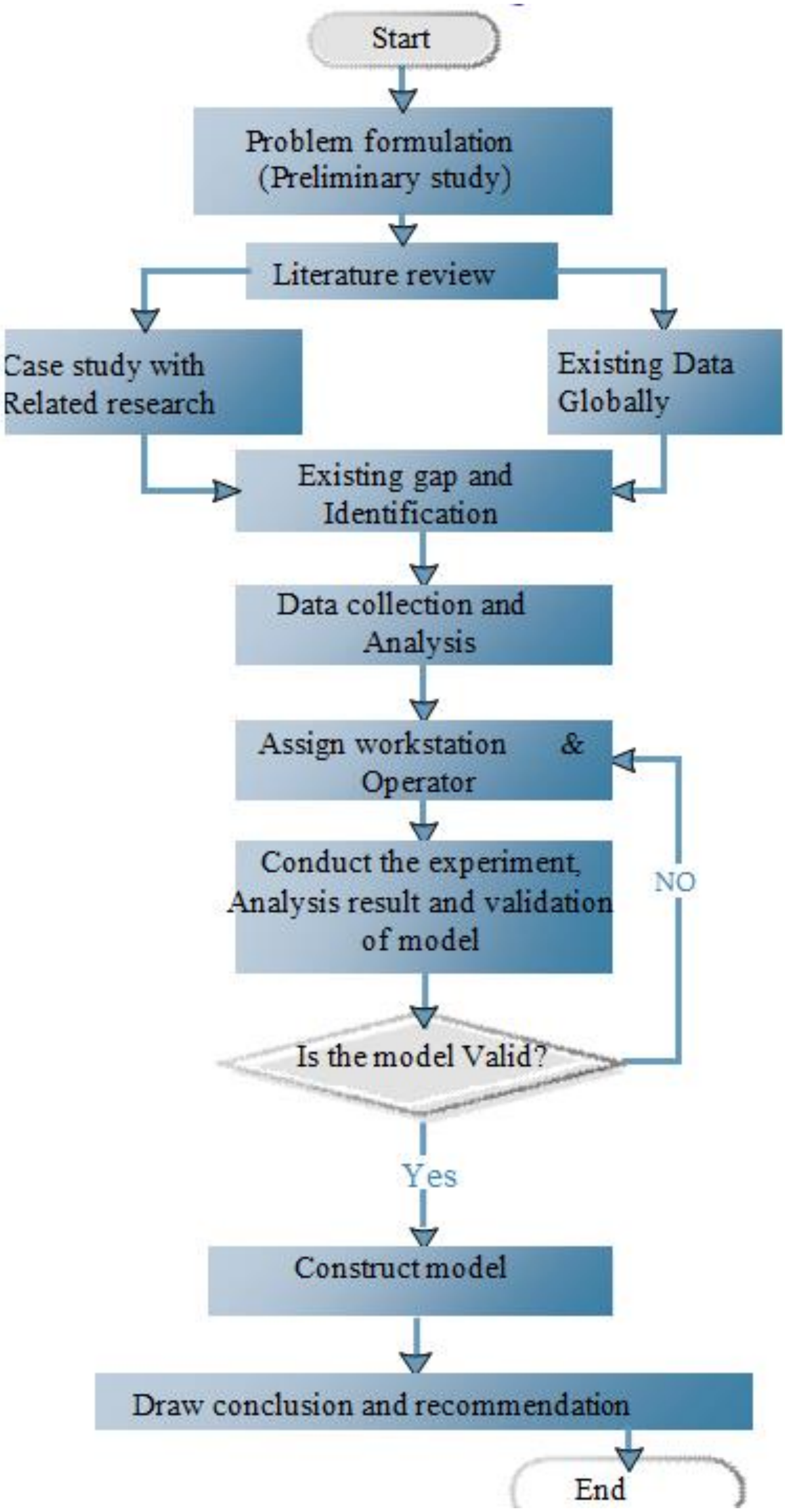
Start
Problem formulation
(Preliminary study)
Literature review
Case study with
Related research
Existing Data
Globally
Existing gap and
Identification
Data collection and
Analysis
Assign workstation &
Operator
Conduct the experiment,
Analysis result and validation
of model
NO
Is the model Valid?
Yes
Construct model
Draw conclusion and recommendation
End

Figure:3. 1. Research Framework

3.3. Data Collection Method

Different types of data are found and used as research process input. Both primary and secondary data collection techniques are used in this research methodology.

B. Primary Data

Primary data is observing the case company physically and speaking with several accountable parties, including the production manager, line supervisors, and supervisors of the case company, during an interview that takes the shape of a dialogue constitute primary data. To reduce the number of workstations, idle time, and assembly line data, additional data was gathered on processing speed, system bottlenecks, and various model-type schedules.

1. Direct observation

In order to identify the key elements that affect the case company's capacity for competition, direct observation was carried out by travelling to the location. Recorded information included information on worker motion, the production flow process, worker working conditions, the amount of time it takes a department to perform a task, a bottleneck area, daily objectives, and the actual output of the organization. Processing time is the key data required for manufacturing system modeling, the actual processing time of each work element recorded using stopwatch. Snapback or repetitive stopwatch reading and recording methods are used. The stopwatch is started at the beginning of each element. At the end of each element, the watch is read and the hand is snapped back to zero.

2. Interviews

The interview guide is designed to allow flexibility and generate responses and issues for further probing and clarification. Conducting key informant interviews is a loosely structured qualitative in-depth interview with people who are considered particularly knowledgeable about the topic of interest. In this research, key informants were selected from Anbessa shoe Share Company (ASSC) general manager, factory coordinator, line supervisor and supervisor.

C. Secondary Data

Secondary data from organisations and associations is what the researcher tries to gather r ecent data related to the cause company (such as policy and strategy, capacity utilisation, production and sales volume, export value, employee creation and wage, etc.) in the form of a study and journal from various organisations and associations like UNIDO, LIDI, an d ELIA. In the first stage of the study, an extensive survey has been conducted (to understand the existing concepts, arguments, methods and advancements on performance improvement) with a particular focus on the problems and improvement activities of manufacturing industry. This is conducted using the following secondary data sources:

- Academic sources - The academic sources consist of books, journal articles and graduate report on various aspects of the performance improvement.
- Official sources – it includes studies and previous surveys of the manufacturing industries in Ethiopia, conducted by government and non- government bodies.
- Public sources - The public sources consist of articles from local and foreign newspapers, magazines and websites

Data from previously worked researches Even though there are no as such sufficiently of researches in the footwear-manufacturing sector, there are some researches worked especially in the scholars. The problems raised by these studies can be used as secondary data for this research. Accordingly, the research conducted by different scholars and the thesis works conducted at different times by different individuals can be taken as a document to gather some data about the performance improvement and line balancing related problems in the footwear manufacturing area, especially the research conducted by the Industrial Engineering students for their master’s program.

Conclusions, the study was unable to include all of the footwear manufacturing companies that can be found around the nation due to time constraints. Thus, the researcher only took into account the companies that were based in ASSC and that exported their goods to Europe, the U.S., and other nations, as well as the factories' seniority, experience, and ability to easily access data. The ASSC was taken into account for this research, taking into account the research design, anticipated response rate, survey cost, and available time.

3.4. Data and Model Validation and Verification

The assessment of the sample size is the most important methodological component of a research study for accurately drawing generalizations about the population or study outcomes. Random sampling of observations is taken at irregular or random intervals. The number of observations affects the time study for the desired level of accuracy. Sufficient number of observations is conducted; an inadequate number of observations will fail to predict the result. Experience has shown that a 95% confidence level and a 5% significance level are sufficient for a time study. Therefore, using a stopwatch, the time is recorded, and the number of observations is determined as follows.

In accordance with the typical normal distribution, z = 1.65 (for a degree of confidence of 95%), d = 0.05 (because it is desired to know the real proportion within 5%), and P = 0.009 are the estimated proportion of the population that exhibits the feature. $N = 1.65^2 * 0.009 * (1-0.009) / 0.05^2$. The operation time should ideally be conducted with at least ten (10) observation cycles in order to conduct a reliable scheduling analysis.

N=2.7225*0.009(0.991)/0.0025

Sample size (N) =<u>10</u>

Model Validation and Verification: - One of the most important steps of simulation modeling is validation and verification (Sargent et al., 2010). If the model does not reflect the real system, the results of the model will have a negative impact on the reliability and quality of the decision to be made. Therefore, to accurately reflect the nature of the product line, it has been verified and validated. Verification is the process of ensuring that the arena model behaves as intended according to the assumptions made. Generally, it assesses the correctness of the model. Different methods have been applied to verify the model.

- One easy method of verification is to allow only a single entity to enter the system and follow that entity to be sure that the model logic and data are correct.
- Checking how the model behaves under extreme conditions.
- Code verification: when arena simulation runs, the SIMAN code for all models can be viewed using the Run/SIMAN/View menu option.
- The simulation model is verified by checking the conformance of its output with some factory laws. little’s laws

Through put=1/cycle time

The following are various validation techniques used:

- Animation: The model's operational behavior is displayed graphically as it moves through time. E.g., the movements of parts through a factory during a simulation run are shown graphically.
- Comparisons to other valid models: Various results (e.g., outputs) of the simulation model being validated are compared to the results of other valid models.
- Degenerate test: the degeneracy of the model's behavior is tested by appropriate selection of the values of the input and internal parameters.
- Event validation: The "events" of occurrences in the simulation model are compared to those in the real system to determine if they are similar.
- Extreme condition tests: The model structure and outputs should be plausible for any extreme and unlikely combination of levels of factors in the system.
- Historical data validation: If historical data exist (e.g., data collected on a system specifically for building and testing a model), part of the data is used to build the model, and the remaining data are used to determine (test) whether the model behaves as the system does.
- Parameter variability: sensitivity analysis consists of changing the values of the input and internal parameters of a model to determine the effect on the model's behavior or output.
- Documentation: Documentation on model verification and validation is usually critical in convincing users of the "correctness" of a model and its results and should be included in the simulation model documentation

3.5. Ethical consideration

The School of Mechanical and Industrial Engineering at the Addis Ababa Institute of Technology (AAiT) granted authorization for the study under ethical consideration. The School of Mechanical and Industrial Engineering addressed official letters to A Case of Study at Anbessa Shoe Share Company. There consider different conditions during this research study for both of the company and workers. During the study processing and collecting data system, it needs consideration in the case of the existence of different peoples and it needs to be respectful of the existing differences and work environment (attitude, interest, religion, culture, etc.) of the employees and the rules of the company.

Human considerations: The operating system of the workforce is deemed effective through the specifications of operators during their working hours. The company employs workers with a variety of viewpoints and physical make-ups. This study therefore takes into account enough room for movement, which is related to workers' body stances.

Preserve the standards: Consistently hold all operations to the same high standards that you would expect given the workers' standard compensation and performance evaluations.

Quality of the products: Ensure the existing products of the company to improve their competitiveness.

3.6. Input Data Analysis and Presentation

The raw data on the current working conditions were collected, objectively examined, and then appraised. Production/operations management uses quantitative methods (POM software) to calculate sample size, average time, and sample standard deviation for each stochastic process at the appropriate degree of confidence. The input analyzer tools in Arena should be used with a sample size of 10. Nonetheless, 25 data sets were used for processing in order to boost the quality of the input data. The sample sizes produced the necessary p values for the distribution summary (A. Mulugeta, 2020). The sample data was adjusted to a suitable probability distribution and sent into the arena input analyzer, which then suggested the parameters that would best match the data. Considering the study's findings,

After being gathered, both primary and secondary data are examined in accordance with the study's goals. In order to display the data gathered from the companies in a succinct and meaningful manner, descriptive analysis that represents and interprets the data using tables is also made to analyze the data collected from the companies. Percentages are used to demonstrate the respondents' attitudes toward line balancing techniques.

The manufacturing line is modeled using Arena simulation software, while optimization model creation is done using Opt Quest software. Eventually, a simulation model was created based on the following fundamental processes: formulation of the problem, data collection and model definition, formulation and building of the model, model verification and validation, experimentation, and analysis. An improved model will be created after testing and analysis.

Chapter Four

4. Data Analysis and Presentation

4.1. Data Collection And Presentations

This study focused on a shoe manufacturing line and measured the current production performance of the case company using primary and secondary data collection methods. Output analysis is the analysis of data generated by the simulation model. Its purpose is to predict system performance or to compare the performance of two or more alternative system designs. The analysis of results predicts the performance of the initial model and looks for weaknesses. Therefore, based on the output of the simulation model, the performance parameters are analyzed for the existing manufacturing system so as to determine the cost-benefit analysis improvement model that is developed based on the constraints of the material saved, the number of workers, the number of available machines, and so on. Daily production hours are allocated to four conditions to achieve cycle time reduction, WIP reduction, cost reduction, and profit maximization.

4.2. Product Selection Criteria

To do this research, I mainly used direct observation and measurement methods to collect the necessary data gathered.

- ✓ The process flow diagram of the cutting, stitching, lasting and finishing department.
- ✓ The type of machines required for each process identified.
- ✓ The number of employee assigned at each workstation identified.
- ✓ The production report of the respective lines of daily, monthly data collected.

The case company produces more than two hundred models per year, but it is difficult to solve all the product models, so the priority in the product selection criteria based on the basic types of products have high demand in the market, product complexity (components) and long workstations. It is important to identify one or more products among the most important in product line performance evaluation methods.

Table:4. 1. Shoe model category based on high demand in the market per year

S. No.	Men		Woman		Children	
	Model	Product Qty.	Model	Product Qty.	Model	Product Qty.
1	WR179101	42,511	G4439101	84,796	C32021	16,186
2	Eligin	36,473	ETH Y 04	18,550	C33031	8,924
3	AI2014	34,576	BC6011	10,088	C32041	7,492
4	2340	33,308	960B	9,116	CO8011	2,634
5	4107	30,263	B82014	6,466	C63031	2,118
6	AO2014	16,815	BD6011	4,260	C36011	1,365

The above table shows WR 179101, Eligin, and AI2014 for Gents G4439101 for ladies and C32021 for children's shoes are prioritized/ selected, because that product has high demand in the market per year.

Table:4. 2. Shoe model category based on Product complexity.

S. No.	Men		Woman		Children	
	Model	Component	Model	Component	Model	Component
1	WR179101	26	G4439101	16	C32021	24
2	Eligin	20	ETH Y 04	26	C33031	26
3	AI2014	22	BC6011	16	C32041	20
4	2340	16				

The above table shows AI2014, Eligin, and WR 179101for Gents G4439101 and ETH Y 04 for women and C33031 andC32021 for children shoes are prioritized / selected, because that product has high component. However, no more deference in the table 4.1 selected Models so to select WR 179101, Eligin, and AI2014 for Gents G4439101 for women and C32021 for children's shoes is prioritized/ selected.

Table:4. 3. Shoe model category based on long number of workstations.

S. No.	Men		Woman		Children	
	Model	No. Workstation	Model	No. Workstation	Model	No. Workstation
1	WR179101	49	G4439101	28	C32021	46
2	Eligin	32	ETH Y 04	26	C33031	32
3	AI2014	41	BC6011	32	C38012	40
4	2340	36				
5	4107	32				

The above table shows Given that the product has a lengthy workspace, the following shoes are prioritized or chosen: WR 179101, AI2014, 2340, and Eligin for Gents; G4439101 and BC6011 for Women; C32021 and C38012 for Children's Shoes. However, while taking into account table 4.1 and 4.2 high priorities, including this table, the models that were ultimately chosen were WR 179101, AI2014, and Eligin for Gents, G4439101 and for Women and C32021 for Children's Shoes. All shoe models are compared based on market share, consumer demand, the number of components, and the number of workstations in order to determine the basic product.

Therefore, the basic products, which are mostly, produced in production line, selected in the above criteria such WR 179101, Eligin and AI2014 for Gents, G4439101 for women and C32021 for children. These products are produced most of the time in the production line and due to this it is assumed that good conclusion about the production line can be deduced from the output of production line model. After the above data has collected, measurements of the following times are done: For each activity, a number of observations were taken to measure process time using stopwatch. The setup time, loading and unloading time added to have the entire process time of each processes. The arrival time of entities to production line measured. The existing number of workstations identified and type of inputs for each identified.

The company usually follows a make to order batch production system for its both local and export market. In stitching section, line balancing means allowance of operations or jobs based on the objective of minimizing the amount time as well as the work in process and thus increasing production capacity. Production capacity in a line 1000 pairs per day but the actual production under installed capacity therefore to selected four production lines in the sample shows table 4.4 below.

Table:4. 4. Daily production volume of the company

Date	**Line 1**	**Line 2**	**Line 3**	**Line 4**	**Total out put**
3/1/2021	580	500	303	510	1893
3/3/2021	605	500	277	319	1701
3/4/2021	500	500	95	438	1533
3/5/2021	330	300	190	320	1140
3/6/2021	360	200	336	478	1374
3/7/2021	500	250	450	471	1671
3/8/2021	500	400	358	165	1423
3/9/2021	800	500	453	174	1927
3/10/2021	750	250	585	474	2059
3/11/2021	1000	300	296	450	2046
3/12/2021	600	500	345	262	1707
3/13/2021	650	500	215	266	1631
3/14/2021	600	500	370	360	1830
3/15/2021	610	500	116	428	1654
3/16/2021	460	400	230	380	1470
3/17/2021	600	400	222	340	1562
3/18/2021	460	400	316	396	1572
3/20/2021	340	250	326	280	1196
3/21/2021	460	400	352	400	1612
3/22/2021	500	400	379	500	1779
3/23/2021	480	300	377	560	1717
3/24/2021	290	200	369	550	1409
3/25/2021	380	200	590	396	1566
3/26/2021	500	375	483	650	2008
3/27/2021	230	200	384	280	1094
3/28/2021	400	300	398	303	1401
3/29/2021	630	500	195	502	1827
3/30/2021	500	300	273	414	1487
3/31/2021	410	300	220	385	1315
Total	15025	10625	9503	11451	46604
Average	518.1	366.379	327.69	394.862069	1607/4= 401.75

Table 4.4 shows productions for each line involved in production variation of various models in various products output, but the real product is different despite the same line capacity.

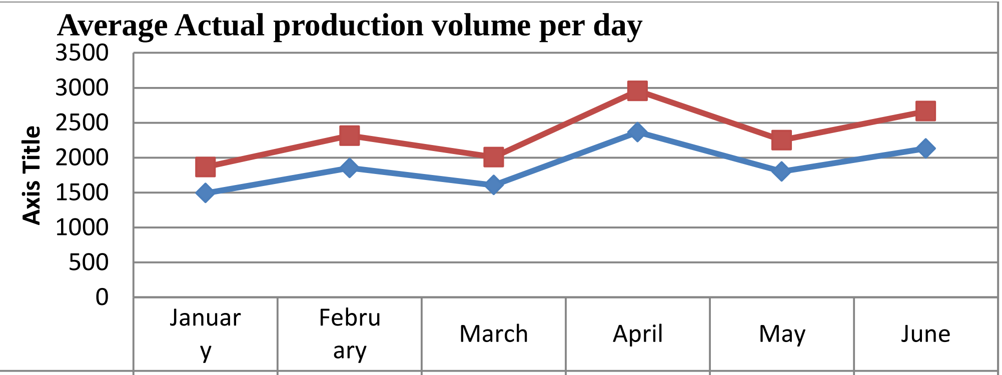

	Januar y	Febru ary	March	April	May	June
Average daily product per line	373.125	463.1	401.75	591.2	450.1	532.95
Production volume per day	1492.5	1852.4	1,607	2364.8	1800.4	2131.8

Figure:4. 1. Actual production volume per day for the company from (January – June) 2021 G.C Historical data.

From the above Figure 4.1: One: we can how the production volume of the company changes even with consecutive day. As the result of this, the capacity utilization the company changes from day to day. The average capacity utilization with respect to the Actual and planed capacity can be calculated as follows.

Capacity utilization = (Actual output (AO))/ (potential output (PO))……………Eq. (9)

=2,834 per day /4,852 day =**59 %**

The capacity utilization there is a need to work more jobs in relation to the market to get more shares. This can be achieved in several ways. Performance improvement at the core business function of the company, which is the production department, will bring a big step improvement in reducing manufacturing costs. Reducing manufacturing cost will decrease market price of the product. When the market price of the product decreases, buying capacity of customer will increase. Then the company's market share will increase. This will in turn increase production output. When the production output increases, capacity utilization will also increase.

4.3. Data Collection Process

In a simulation task, the ultimate use of input data is to drive the simulation model. This process includes the collection of input data, the analysis of input data, and the use of input data in a simulation model. The following data were collected for the development of a simulation model of footwear manufacturing: Factory capacity

- number of tasks
- Processing time for each task
- Priorities between processes

- Arrival frequency of entities or time between arrivals of each assembly line
- Manning level for each task
- Conveyor length and speed
- Working hours

These input data may be obtained from historical records or collected in real time. The collection of input data is often the most difficult process involved in conducting a simulation modeling and analysis task. Initially, data collection begins by identifying and observing the different operations done on each assembly line. After observing all operations or tasks that are done on the assembly lines, we define individual work elements for each workstation. Individual work element is a minimum rational work element having a specific limited objective. Based on this, the numbers of tasks on each assembly line are determined, and the processing time for each task is collected and presented in the following tables below; all processing times and arrival frequencies were found to be probabilistic rather than deterministic. The processing time was defined as the time span from entry to the station to the end of process completion, excluding the times of stoppages, rework, and queues. Sometimes workers are going upstream ahead of the conveyor and picking up the WIP from the moving conveyor. This makes difficult and complex the data collection process. Processing time for each task was measured in seconds and was taken using a digital stopwatch at every workstation. The number of data collection points in these five types of models is one for each process recording.

The description of the two methods outlined below, with illustrations, should provide sufficient information as to how each method of reading and recording operates. Continuous Stopwatch Reading and Recording the stopwatch is started at the beginning of the first element of the job description and runs continuously until the study is completed. At the end of each element, in turn, the particular reading of the watch is recorded for the corresponding element.

Snapback or Repetitive Stopwatch Reading and Recording the stopwatch is started at the beginning of each element. At the end of each element, the watch is read and the hand is snapped back to zero. It starts again for the next element.

The collected raw data for each process of the assembly line is offered as follows:

After the selection of models, we measure each activity 10 times based on the sample size of the WR-17-9101 model, which depends on the line, numbers of operators, and total production in the data. Observation time (OT) Seconds. Appendix A

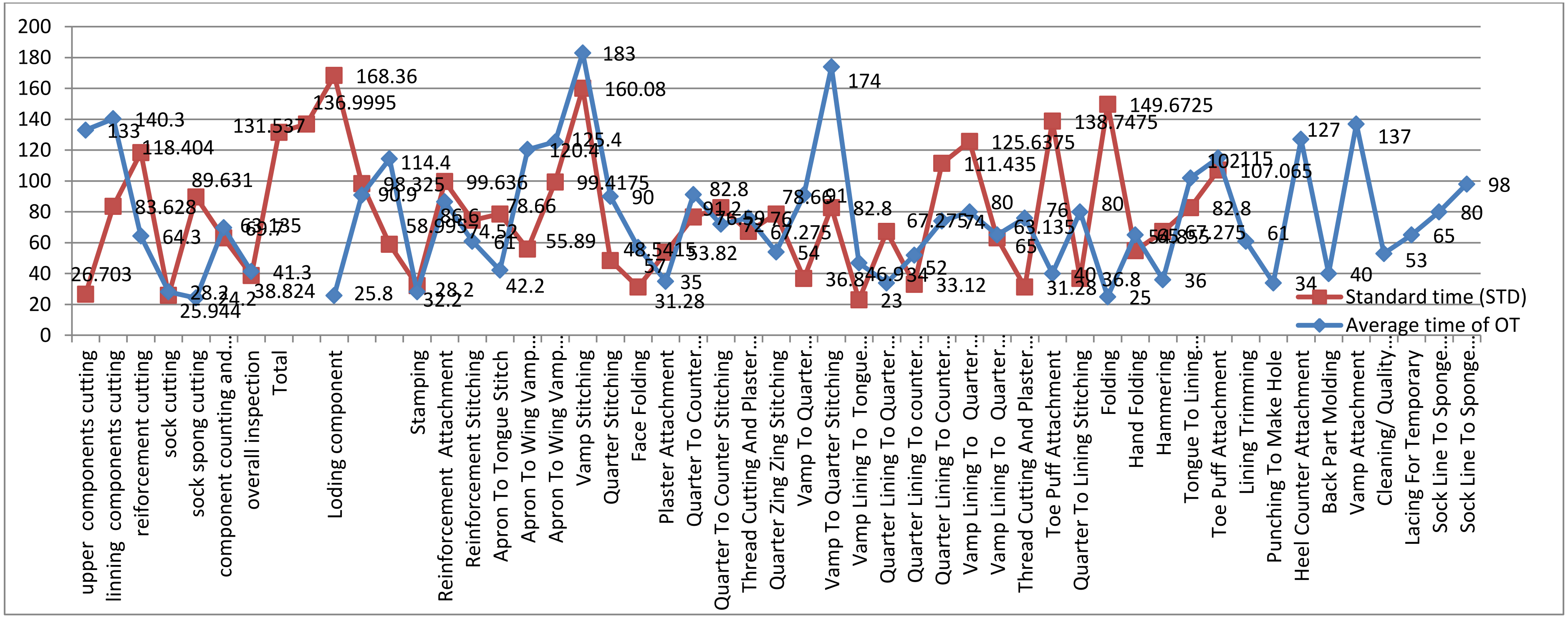

Figure:4. 2. Production Cycle time

From the above figure, observed time refers to the amount of time needed to execute a specific task. This is one of the variables taken into account while determining standard time. Standard time is the amount of time needed for a certain task to be completed with the aid of a suggested method by a typical qualified worker operating at a typical speed.

4.4. Data Analysis

Under this data analysis, to analysis the following activities:- Cycle time ,Performance rating, Basic time ,Allowance or factors ,Number of operator , Number of machine ,Working hours (regular), Standard allowed minutes(SAM), Total minute produced by an operator , Total minute attended by an operator , Total minute produced by the line ,Total minute attended by the line, Efficiency calculation of operator, Efficiency calculation of line, Average line efficiency, Factory capacity and Production capacity.

Stitching section has four lines; they are list the following;

Line 1: (WR-17 9101)

Line 2: (G443, Elgin)

Line 3: (C32021)

Line 4: (AI2014)

4.4.1. Stitching section (line 1) WR-179101

For this line, select the following models from the above list: Working Time = 480 minutes/day = 28,800 seconds

Total time taken for one pair = 5095 sec.

Bottle neck sec = 168.36sec

Based on the existing data

Conveyor Speed = 28.8 cm/min

Conveyor full cycle rotation time recording Stopwatch and refers to privies machine rotation performance of 208.333 min and to calculate

Conveyor rotation per day = working time/full cycle rotation time

=480 min/208.33min

=2.3 is number of rotation per day

The numbers of trolleys are 115

115* 2.3 = 264 pairs, but the last rotation is not completely finished (finished to 50%, 75%, and 100%).

Table:4. 5. Example of finish rate last rotation is not completely finished in specific date by different internal problem.

Daily Stitching Productivity follow-up										**Stitched Upper**					
Date	**Line**	**Factory**	**P.Wo No.**	**Model**	**Color**	**Wo Qt**	**Total Finished Qt**	**Day-1**	**Day-2**	**Day-3**	**Day-4**	**Day-5**	**Day-6**	**Finish Rate**	**Order Status**
1-Nov	Line 1	Akaki	4475	WR-17 9101	Black	1000	753	43	80	270	270	90		75 %	open
1-Nov	Line 2	Akaki	4474	Sport shoe	Black	1000	98	80	18					10%	open
1-Nov	Line 2	Akaki	4456	Sport shoe	Black	1000	480	100	380					48%	open
2-Nov	Line 2	Akaki	4457	Sport shoe	Black	1000	1000	20	280	130	154	206	210	100%	closed
3-Nov	Line 1	Akaki	4486	Eligin	Brown	1000	811	241	94	192	280	4		81%	open
3-Nov	Line 3	Akaki	4523	C32021	Black	1000	998	266	287	433	12			100%	open
6-Nov	Line 3	Akaki	4526	B82014	Black	1000	289	160	117	12				29%	open
8-Nov	Line 1	Akaki	4485	G4439101	Black	1000	350	198	150	2				35%	open
8-Nov	Line 3	Akaki	4532	B82014	Black	1000	1000	170	647	169	14			100%	closed
11-Nov	Line 1	Akaki	4484	Eligin	Black	1000	920	28	161	110	197	138	286	92%	open
11-Nov	Line 3	Akaki	4533	C32021	Black	1000	992	114	638	240				99%	closed
14-Nov	Line 1	Akaki	4535	Eligin	Black	1000	1000	270	497	182	51			100%	closed
15-Nov	Line 2	Akaki	4472	Sport shoe	Blue	500	386	271	115					77%	open
16-Nov	Line 1	Akaki	4489	WR-17 9101	Black	1000	468	18	99	172	72	43	64	47%	open
16-Nov	Line 2	Akaki	4508	Sport shoe	Black	500	500	203	297					100%	open
16-Nov	Line 3	Akaki	4548	C32021	Black	1000	1000	367	31	25	567	10		100%	closed
18-Nov	Line 3	Akaki	4550	B82014	Black	1000	1000	289	603	68	40			100%	closed
18-Nov	Line 4	Akaki	4503	AI2014	Brown	500	520	70	240	210				104%	open
18-Nov	Line 4	Akaki	4504	AI2014	Black	500	390	260	130					78%	open
20-Nov	Line 1	Akaki	4456	G4439101	Black	1000	115	115						12%	open
20-Nov	Line 2	Akaki	4483	Sport shoe	Brown	500	418	150	208	60				84%	open
20-Nov	Line 3	Akaki	4551	C32021	Black	1000	996	110	595	281	10			100%	open
21-Nov	Line 2	Akaki	4506	Sport shoe	Brown	250	170	140	30					68%	open
22-Nov	Line 3	Akaki	NF-02	B82014	Black	1000	499	404	95					50%	open
22-Nov	Line 4	Akaki	4525	AI2014	Black	750	200	170	30					27%	open
22-Nov	Line 1	Akaki	NF-02	G4439101	Black	100	60	50	10					60%	open
22-Nov	Line 3	Akaki	4502	B82014	Black	500	80	50	30					16%	open
23-Nov	Line 2	Akaki	4483	Sport shoe	Black	500	0							0%	

Based on the above table in the production average semi-finished product is completed 70% only 30% product is in the progress.

264 pairs * 30% = 79 pairs in progress after one rotation

264 - 79 = 185 pairs/day

Cycle time (CT) = (Total Operation Time)/(Quantity of Production Produced)……… (1)

Table:4. 6. Overall existing assembly line processes and their predecessors

S. No.	Sequence of operation	M/cs, Tools & Equipment	No. of M/cs	No. of worker	Standard time (STD)	Cycle time	predecessors
					NT+AF	ST/No.Lbr	
1	upper components cutting	M/C	1	1	137	137	
2	lining components cutting	M/C	1	1	137	137	1
3	reinforcement cutting	M/C	1	1	66.5	66.5	2
4	sock cutting	M/C	1	1	25.9	25.9	1
5	sock sponge cutting	M/C	1	1	23.6	23.6	3
6	component counting and overall dispatch	Manual		1	64.1	64.1	3

7	overall inspection	Manual		1	37.9	37.9	4
8	Lading component			1	26.7	26.7	5,6
9	Tongue, Quarter, Counter & Collar marking	Manual		2	83.62	41.81	7,8
10	Collar, Quarter, Counter, Eye stay lining & Leather logo A skiving	skiving m/c	1	2	118.4	59.2	9
11	Stamping	Stamp M/C	1	1	25.9	25.9	10
12	Reinforcement Attachment	Manual		1	89.6	89.6	11,3
13	Reinforcement Stitching	SNPB M/C	1	1	63.1	63.1	12
14	Apron To Tongue Stitch	SNPB M/C	1	1	38.8	38.8	13
15	Apron To Wing Vamp Attachment	Manual		2	131.5	65.76	14,15
16	Apron To Wing Vamp Stitching	SNPB M/C	1	2	136.99	68.49	15,3
17	Vamp Stitching	SNPB M/C	1	1	168.36	168.36	17
18	Quarter Stitching	SNPB M/C	1	2	98.3	49.16	10,18
19	Face Folding	SNPB M/C	1	1	58.9	58.9	2,9
20	Plaster Attachment	Manual		1	32.2	32.2	1,19
21	Quarter To Counter Attachment	Manual		2	99.636	49.818	18
22	Quarter To Counter Stitching	SNPB M/C	1	1	74.52	74.52	21
23	Thread Cutting And Plaster Attachment	Manual		1	78.66	78.66	22
24	Quarter Zing Zing Stitching	zigzag M/C	1	1	55.89	55.89	20,23
25	Vamp To Quarter Attachment	Manual		2	99.41	49.705	24
26	Vamp To Quarter Stitching	SNPB M/C	1	2	160.08	80.04	16,26
27	Vamp Lining To Tongue Stitching	SNPB M/C	1	1	48.54	48.54	25
28	Quarter Lining To Quarter Stitching	SNPB M/C	1	1	31.28	31.28	27,33
29	Quarter Lining To counter Attachment	Manual		1	53.82	53.82	28
30	Quarter Lining To Counter Stitching	SNPB M/C	1	1	76.59	76.59	29
31	Vamp Lining To Quarter Attachment	Manual		1	82.8	82.8	30
32	Vamp Lining To Quarter Stitching	Manual		1	67.275	67.275	31
33	Thread Cutting And Plaster Attachment	Manual		1	78.66	78.66	32
34	Toe Puff Attachment	Manual		1	36.8	36.8	34
35	Quarter To Lining Stitching	SNPB M/C	1	1	82.8	82.8	35
36	Folding	SNPB M/C	1	1	23	23	36
37	Hand Folding	Manual		1	67.2	67.2	37
38	Hammering	Equipment m/c	1	1	33.12	33.12	10
39	Tongue To Lining Attachment	Manual		1	111.435	111.435	38
40	Toe Puff Attachment	SNPB M/C	1	2	125.63	62.815	39
41	Lining Trimming	SNPB M/C	1	1	63.135	63.135	40
42	Punching To Make Hole	M/c	1	1	31.28	31.28	41,42
43	Heel Counter Attachment	Manual		2	138.74	69.37	43,44
44	Back Part Molding	Molding M/C	1	1	36.8	36.8	45
45	Vamp Attachment	Manual		2	149	74.5	46,47
46	Cleaning/ Quality Inspecting/	Manual		2	54	27	48
47	Lacing For Temporary	Manual		1	67	67	49,50
48	Sock Line To Sponge Attachment	Manual		1	82	82	51,52
49	Sock Line To Sponge Stitching	SNPB M/C	1	2	107	53.5	53
50	Final QC	Manual		1	18	18	54
51	last loading and insole	Manual		1	42.5	42.5	55,56
52	last cleaning	Manual		1	27	27	57
53	loading upper, toe cap steel	Manual		1	60	60	58,61
54	roughing around center of out sole	Manual		1	29	29	59
55	out sole cleaning	Roughing m/c	1	1	33	33	60
56	attaching insole on last	Manual		1	26	26	62
57	back part molding	M/C	1	1	47.092	47.092	63
58	insert to steam Upper	Back part	1	1	23.805	23.805	64

		molding m/c					
59	insert last and side closing	Manual		1	34.155	34.155	65
60	apply glue on sides of the upper	Manual		1	37.26	37.26	66
61	insert to steam	Manual		2	57.339	28.6695	67
62	creaming on upper and inserting in heat tunnel	Steam and heel seat lasting m/c	1	2	56.948	28.474	68
63	Pounding	Manual		1	31.671	31.671	69
64	in process quality inspection	Pounding m/c	1	1	33.212	33.212	70
65	first level upper roughing	Manual		1	35.5	35.5	71
66	second level upper roughing	Manual		1	33.212	33.212	72
67	first adhesive coating on upper	Manual		1	68.609	68.609	73
68	first adhesive coating on out sole	Manual		1	70.466	70.466	74
69	second adhesive coating on upper and sole	Manual		1	29.704	29.704	
70	sole and upper dryer sole	Manual		1	28.773	28.773	75,76
71	sole and upper re-activator	Dryer m/c	1	2	30.82	15.41	77
72	attaching sole with upper	Re-activator m/c	1	1	46.36	46.36	78
73	attaching sole with upper and pressing	Manual		2	70.01	35.005	79
74	remove temporary shoe lacing	pressing m/c and chiller m/c	1	2	37.36	18.68	80,81
75	de-lasting cleaning	Manual		1	16	16	82
76	cleaning excess glue	De-lasting m/c	1	3	44	14.6	83
77	ironing to remove wrinkle	Excess glue remover m/c	1	2	53	26.5	84
78	painting on over rough place	Ironing m/c	1	2	15	7.5	85
79	apply cream on upper	Manual		1	17	17	86
80	apply glue and insert sock lining	Manual		1	18	18	
81	shoe lacing	Manual		2	28.4	14.2	
82	inserting tissue paper	Manual		3	28.5	9.5	
83	final brushing for shine	Brushing m/c	1	2	16.1	8.05	
84	final quality inspection	Manual		2	22.2	11.1	
85	Arrangement by Model	Manual		2	16.1	8.05	
86	packed and labeling	Manual		1	23.6	23.6	
Overall Total			39	113	5095	4085.3	

From the above time study sheet, the total exist standard time (ST) of the cutting section is 5095sec (84.91minutes) and total labour is 113 with a total cycle time of 4085.3 second (68.08 minutes) From the above table, most of the operation processes are processed by the machine and some operations are processed manually. In addition, the total standard time is 5095sec (84.91minutes) seconds and the total cycle time is 4085.3 second (68.08 minutes) with a maximum cycle time of 168.36 second.

Total cycle time = 4085.3 second (68.08 minutes)

Total standard time (ST) =5095sec (84.91minutes)

Number of Station = 86

Total number of labour = 113

Available time 28800 second

Maximum cycle time = 168.36 second

$$E = \frac{Total\ Work\ Content}{\text{Number of Workstations x Longest Operation}} * 100 \ldots\ldots\ldots\ldots (3)$$

Line efficiency (E) =   (Total Work Content)/(Number of Workstations x Longest Operation)

Line efficiency = 5003/86*168.36 second*100

Line efficiency =**56.85 %**

Total output per day = (number of labor in a line * available time (min) * line efficiency) / total ST)

Output per a day = (113 * 28800 * 0.5685 /5095 second

= **588 pair/day**

Output per labor = total output per day/total number of labor in a line

= 588/113 = **5.2 pairs/ labor/ day**

Plan (target) output is 1000 pairs per day, but the actual output is 588 pairs per day.

Table:4. 7. Work Element Assigned to Station

Workstation	Number of worker	Work element	Task Time (Sec)	Time per Station (Sec)
WS-1	2	1	137.655	
		6	64.216	201.871
WS-2	1	2	137.0455	137.0455
WS-3	3	3	66.654	
		4	25.76	115.874
		5	23.46	
WS-4	2	7	26.703	52.647
		10	25.944	
WS-5		8	82.8	201.204
	5	9	118.404	
WS-6		11	89.631	152.766
	2	12	63.135	
WS-7	1	13	38.824	38.824
WS-8	2	14	131.537	131.537
WS-9	2	15	136.9995	136.9995
WS-10	1	16	168.36	168.36
WS-11	2	17	168.36	168.36
WS-12	1	18	58.995	58.995
WS-13	3	19	32.2	131.836
		20	99.636	
	2	15	74.52	153.18
WS-14		16	78.66	
W-15	3	17	55.89	155.3075
		18	99.4175	
WS-16	3	19	160.08	160.08
WS-17	1	20	48.645	48.645
		21	31.28	161.69
WS-18	3	22	53.82	
		23	76.59	
WS-19	2	24	82.8	150.075
		25	67.275	
WS-20	3	26	78.66	78.66
WS-21		27	36.8	162.4375
	3	33	125.6375	

WS-22	1	28	82.8	82.8
WS-23	1	29	23	23
WS-24	1	30	67.275	67.275
WS-25	1	31	33.12	33.12
WS-26	1	32	111.435	111.435
WS-27	1	34	63.135	63.135
WS-28	3	35	31.28	170.0275
		36	138.7475	
WS-29	1	37	36.8	36.8
WS-30	2	38	149.6725	149.6725
WS-31	2	39	54.855	54.855
WS-32	1	40	67.275	67.275
WS-33	1	41	82.8	189.865
		42	107.065	
W-34	1	43	138.74	138.74
W-35	1	44	36.8	36.8
W-36	2	45	149	203
	2	46	54	
W-37	1	47	67	149
	1	48	82	
W-38	1	49	107	107
W-39	1	50	18	18
	1	51	42.5	69.5
W-40	1	52	27	
W-41	1	53	60	60
W-42	1	54	33	62
	2	55	29	
W-43	1	56	26	26
W-44	1	57	47.092	47.092
W-45	1	58	23.805	23.805
W-45	1	59	34.155	34.155
	1	60	37.26	37.26
W-46	2	61	57.339	57.339
W-47	2	62	56.948	56.948
W-48	1	63	31.671	31.671
W-49	1	64	35.212	35.212
W-50	1	65	35.5	67.92
	1	66	32.42	
W-51	2	67	68.609	68.609
W-52	1	68	70.466	100.17
	1	69	29.704	
W-53	1	70	27.8	61.3
	2	71	33.5	
W-54	1	72	44.8	120.9
	2	73	76.1	
W-55	1	74	34.2	34.2
W-56	1	75	14.8	14.8
W-57	3	76	42.8	42.8
W-58	2	77	57.7	57.7
W-59	2	78	15.3	15.3
W-60	1	79	18.8	67.1
	1	80	17.4	
	2	81	30.9	
W-61	3	82	26.1	26.1
W-62	2	83	14.8	14.8
W-63	2	84	21.5	37.1
	2	85	15.6	

W-64	1	86	25.7	25.7
			5,095	5,095
Bottleneck =168.36sec cycle time in pear loss Number of work station =36 Total time taken for one pair = 5,095 second 168.36*36 = 6,060.96 second In min = 6,060.96 /60 = 101.016 min cycle time The number of rotation per day 480/101.016 = 4.5 rotation			Therefore they produce 115*4.5=517.5 but the last rotation is not complete 575-79= 498 pcs/day Conveyor speed=69.2 cm/min One worker can produce =498/63 pairs/day =7 pairs/day	

The above-mentioned and listed process has a high workstation count, a low capacity per day, and it needs to be merged with other processes in accordance with its requirements to shorten cycle times and ensure a smooth flow of production.

Table:4. 8.To balance WR 179101 process precedence's.

S.no.	sequence of operation	m/cs, tools & equipment	no. of m/cs	no. of worker	before balancing	after balancing	predecessor
1	upper components cutting and component counting and overall dispatch	m/c	1	1	137	147	1 reduce lbr
2	lining components cutting	m/c	1	1	137	105	
3	reinforcement, and sock sponge cutting	m/c	2	2	66.5	60	1 reduce lbr
4	overall inspection	Manual		1	37.9	30	
5	collar, quarter, counter, eye stay lining & leather logo a skiving	skiving m/c	1	1	118.4	100	1 reduce lbr
6	lading component and tongue, quarter, counter & collar marking	Manual		2	201.2	150	1 reduce lbr
7	stamping and reinforcement attachment	skiving m/c	1	1	115.57	106	1 reduce lbr
8	reinforcement stitching	snpb m/c	1	1	63.135	60	
9	apron to tongue stitch	snpb m/c	1	1	38.824	38.824	
10	apron to wing vamp attachment	Manual		1	131.5	96.72	1 reduce lbr
11	apron to wing vamp stitching	snpb m/c	1	2	136.99	65.016	1 lbr add
12	vamp stitching	snpb m/c	1	1	168.36	120	
13	quarter stitching	snpb m/c	1	2	98.325	98.325	
14	face folding and plaster attachment	snpb m/c	1	1	91.195	80	
15	apron to wing vamp attachment and apron to wing vamp stitching	snpb m/c	1	1	183.18	120	
16	quarter to counter attachment and quarter to counter stitching	snpb m/c	1	2	174.156	132.2	1 lbr reduce
17	thread cutting and plaster attachment	Manual		1	78.66	78.66	
18	quarter zing zing stitching and vamp to quarter attachment	zigzag m/c	1	2	98.325	98.325	1 lbr rduced
19	vamp to quarter stitching	snpb m/c	1	2	160.08	110.08	
20	vamp lining to tongue stitching and thread cutting and plaster attachment	Manual		2	127.2	110	
21	quarter lining to quarter stitching	snpb m/c	1	1	31.28	31.28	
22	quarter lining to counter attachment	Manual		1	53.82	53.82	
23	quarter lining to counter stitching	snpb m/c	1	1	76.59	70.464	

24	vamp lining to quarter attachment	Manual		1	82.8	82.8	
25	vamp lining to quarter stitching	Manual		1	67.275	67.275	
26	toe puff attachment	Manual		1	36.8	36.8	
27	quarter to lining stitching	snpb m/c	1	1	82.8	82.8	
28	Folding	snpb m/c	1	1	23	23	
29	hand folding	Manual		1	67.2	67.2	
30	Hammering	equipment m/c	1	1	33.12	33.12	
31	tongue to lining attachment	Manual		1	111.435	95	
32	toe puff attachment	snpb m/c	1	2	125.63	100	
33	lining trimming	snpb m/c	1	1	63.135	63.135	
34	punching to make hole	m/c	1	1	31.28	31.28	
35	heel counter attachment	Manual		2	138.74	108.7475	
36	back part molding	molding m/c	1	1	36.8	36.8	
37	vamp attachment and cleaning/ quality inspecting/	Manual		2	203	160.5	
38	lacing for temporary and sock line to sponge attachment	Manual		2	164	164	
39	sock line to sponge stitching	snpb m/c	1	2	107	107	
40	final qc	Manual		1	18	18	
41	last loading and insole and last cleaning	Manual		2	69.5	69.5	
42	loading upper, toe cap steel	Manual		1	60	60	
43	roughing around center of out sole and out sole cleaning	Manual		2	63	69.5	
44	attaching insole on last	Manual		1	26	26	
45	back part molding	m/c	1	1	47.092	47.092	
46	insert to steam insert	back part molding m/c	1	1	23.805	23.805	
47	first level upper roughing and second level upper roughing	pounding m/c	1	2	68.712	60	
48	first adhesive coating on upper	Manual		1	68.609	55	
49	first adhesive coating on out sole and second adhesive coating on upper and sole	manual		2	100.17	80	
50	sole and upper dryer sole and sole and upper re-activator	dryer m/c	1	2	59.59	60	1 lbr reduce
51	attaching sole with upper and pressing	re-activator m/c	1	2	116.37		1 lbr reduce
52	remove temporary shoe lacing	pressing m/c and chiller m/c	1	2	37.36	37.36	
53	de-lasting cleaning	manual		1	16	16	
54	cleaning excess glue	de-lasting m/c	1	2	44	44	1 lbr reduce
55	ironing to remove wrinkle	excess glue remover m/c	1	2	53	53	
56	painting on over rough place	ironing m/c	1	2	15	15	
57	apply cream on upper	manual		1	17	17	
58	apply glue and insert sock lining	manual		1	18	18	
59	shoe lacing	manual		2	28.4	28.4	
60	inserting tissue paper	manual		2	28.5	28.5	1 lbr reduce
61	final brushing for shine	brushing m/c	1	2	16.1	16.1	

62	final quality inspection	manual		2	22.2	22.2	
63	arrangement by model	manual		2	16.1	16.1	
64	packed and labeling	manual		1	23.6	23.6	
	Total		36	102	5095	4225.3285	

after balancing bottle neck = 120 sec number of work stations =64 total time taken for one pair=4225.3285 sec 120*64=4224 sec in min=4224 sec sec/60=70.4 min	the number of rotation per day 480/70.4= 7 rotation therefore the produce 115*7 = 810 pairs/day but 810 -79= 731 pairs/day conveyor speed = 4000 cm/70.4 min = 57 cm/min one worker can produce = 731/64= 11 pairs/day

The above-mentioned and listed process has a high cycle time, a low capacity per day, and it requires more laborers. It should be compared to other processes in order to reduce cycle time and ensure that the manufacturing process runs smoothly. Based on the differences between before and after blanching in the aforementioned tables, the number of workstations, and historically declining production costs. According to the time research sheet above, after blanching standard time (ST) is 4,225.328 seconds, the labor involved is 102 people, and the cycle time as a whole is 3,193.4 seconds. According to the table above, certain procedures are handled manually while the majority of processes are automated. Moreover, the overall cycle time is 3,193.4 seconds, with maximum cycle duration of 120 seconds.

The total standard time (ST) is 4225.3 seconds

Total cycle time = 3,193.4 seconds

Number of Station = 64

Total number of labour = 94

Available time 28800 second

Maximum cycle time = 120 second

$$E = \frac{Total\ Work\ Content}{\text{Number of Workstations x Longest Operation}} * 100 \ldots\ldots\ldots\ldots (3)$$

Line efficiency (E) = (Total Work Content)/ (Number of Workstations x Longest Operation)

Line efficiency = 4225.328/64*120 second*100

Line efficiency = **63.25 %**

Total output per day = (number of labour in a line * available time (min) * line efficiency) / total ST)

Output per a day = (102 * 28800 * 0.6325 /4225.328 second

= **793 pair/day**

Output per labour = total output per day/total number of labour in a line

= 793/102 = **9 pairs/ labour/ day**

Table:4. 9. Workstation arrangements and its results

	Before blanching	After blanching	Difference
Line efficiency	56.85%	63.25%	6.40%
Number of employees	113	102	11
Number of work station	86	64	22.00
Cycle Time	4,085.3	3,193.4	891.90
Total out put	588 pair/day	793 pair/day	205.00

The summary of the preceding table shows how to save money while implementing line-balancing techniques. 3000, 2200, and 1,180 ETB are the salaries for operators or preparation employees (skilled, semiskilled, and unskilled) and Standard case business cost is one shoe (1000 EB).

Assumesion one operator salary=2000*11=22,000 EB per month

Shoe cost =1000*205 = 205,000 EB

Total cost= 22,000+205,000

=**227,000 EB**

To save 227,000 EB per month, line-balancing measures should finally be used.

4.5. Inter Arrival Distribution

According on the sort of input each manufacturing line uses, the case company's production lines are divided into four groups. The first group consists of insole cutting, sock liner cutting, toe puff cutting, counter cutting, and upper cutting. For a maximum of 140 pairs per operator per day, raw materials are given to cutting operators in this sector.

Stitching and preparation are covered in the second segment. The output from the cutting section is part of the input to this step. Entities arrive in this portion in batches; nonetheless, the conveyor is loaded in pairs. The lasting section's input is formed from the stitching section's output. The stitching section's outputs are first moved to a station for waiting before being temporarily stored in the lasting part.

The durable production line is included in the third section. A portion of the output from the stitching section or collected uppers from the temporary storage serves as the input for the long-lasting production line. Finally, outsoles that have been prepared or obtained from the market make up the inputs for the finishing phase, along with lasted uppers from the lasting portion. The lasting section's completion times determine the starting and packing section's arrival times.

The cutting section inter-arrival time inputs are displayed in Table 4:10. In batches of 140 pairs, 250 pairs, 90 pairs, 80 pairs, and 65 pairs, respectively, the following materials are being delivered: top leather, lining leather, toe puff material, counter material, insole material, and sock lining leather.

Table:4. 10. Inter Arrival Distribution

Create - Basic Process

	Name	Entity Type	Type	Expression	Units	Entities per Arrival	Max Arrivals	First Creation
1	Upper Leather arrival	Upper	Expression	POIS(Mean)	Minutes	140	Infinite	0.0
2	Lining Leather arrival	Lining	Expression	BETA(Beta , Alpha)	Minutes	250	Infinite	0.0
3	Reinforcement	Reinforsment	Expression	WEIB(Beta , Alpha)	Minutes	90	Infinite	0.0
4	Heel puff Material	Heel puff	Expression	TRIA(Min , Mode , Max)	Minutes	80	Infinite	0.0
5	Compo[illegible]	[illegible]	Expression	BETA(Beta , Alpha)	Minutes	65	Infinite	0.0

Reinforcement material arrival

4.6. Fitting Input Data to Arena in Put Analyzer

The input analyzer tool created by Arena analyzed the data, and the outcomes were utilized to establish the type function's value. The input analyzer supplied the probability distribution type and value entered in the Arena processing time. In order to calculate the sample size, sample average, standard deviation of each process for a 95% confidence level and a 5% significance level, POM software was used to analyze the collected process time of each activity before the data were fitted into distribution functions. For more information, see Appendix B. Because process times vary from station to station, the sample sizes for each step are different, leading to additional observations being made.

Using input analyzer, the process time was statically analyzed to choose the optimum statically distribution function for simulation modeling and identify the parameters that best suit the data. A standard ASCII (American Standard Code for Information Interchange) text file in free format containing the data is first created using notepad before the input distribution is fitted into the data. Every simulation run of the models took into account the six-month efficiency of each equipment and worker, and the average daily efficiency was taken to determine the real processing time for each employee. Average processing time divided by actual processing time (average efficiency of employee). Where, for the best fit of the probability distribution function, Average process time is the average process time of each activity. In order to make it clear that beta is the distribution with the fewest square error and is thus chosen, the following fit all summary arranges the distribution from smallest to biggest square error.

Fit All Summary

Data File: C:\Users\ayalew\Desktop\Txt 1.txt 1.txt

Function	Sq Error
Poisson	0.0869
Beta	0.0935
Uniform	0.137
Erlang	0.147
Exponential	0.147
Gamma	0.158
Lognormal	0.164
Weibull	0.165
Normal	0.187
Triangular	0.216

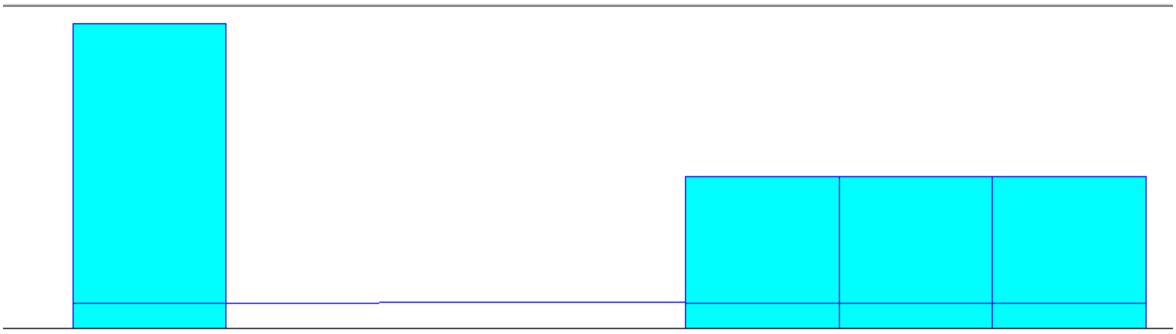

Figure:4. 3. Distribution graph for upper component cutting, stitching and lasting process.

Distribution Summary

Distribution: Poisson

Expression: POIS (133)

Square Error: 0.086894

Data Summary

Number of Data Points= 5

Min Data Value = 130

Max Data Value = 136

Sample Mean = 133

Sample Std Dev = 2.83

Histogram Summary

Histogram Range = 130 to 137

Number of Intervals = 7

Hence, the null hypothesis was accepted that the sample data came from the same population and that the same techniques were utilized to gather data for the remainder of the process duration. The upper component cutting process's p-value was more than the

Table:4. 11. Input analyzer result WR17-9101

S.NO.	Process name	Best Fit distribution	square error
Cutting Department Operations			
1	upper components cutting	POIS (133)	0.086894
2	lining components cutting	138 + 5 * BETA (0.508, 0.433)	0.046970
3	reinforcement cutting	61.5 + WEIB(3.19, 1.41)	0.044372
4	sock cutting	TRIA(25.5, 29, 29.5)	0.066122
5	sock sponge cutting	22.5 + EXPO(1.5)	0.064497
6	component counting and overall dispatch	65.5 + 10 * BETA(0, 0)	0.100000
7	overall inspection	NORM(41.3, 1.85)	0.065286
Stitching Department Operation			
8	Lading upper component	84.5 + 11 * BETA(0.543, 0.543)	0.089193
9	Tongue, Quarter, Counter & Collar marking	110 + 10 * BETA(0.506, 0.526)	0.083991
10	Collar, Quarter, Counter, Eye stay lining & Leather logo A skiving	26.5 + 4 * BETA(0.552, 0.747)	0.006960
11	Stamping	84.5 + EXPO(2.1)	0.043232
12	Reinforcement Attachment	59.5 + 3 * BETA(0.625, 0.625)	0.004634
13	Reinforcement Stitching	39.5 + 6 * BETA(1.06, 1.22)	0.032622
14	Apron To Tongue Stitch	115 + 11 * BETA(0.677, 0.585)	0.173079
15	Apron To Wing Vamp Attachment	124 + GAMM(0.663, 2.87)	0.011748
16	Apron To Wing Vamp Stitching	178 + 9 * BETA(0.986, 0.739)	0.070849
17	Vamp Stitching	85.5 + 9 * BETA(0.512, 0.512)	0.078578
18	Quarter Stitching	53.5 + 7 * BETA(0.181, 0.181)	0.120995
19	Face Folding	31.5 + 8 * BETA(0.904, 1.06)	0.150812
20	Plaster Attachment	POIS(91.2)	0.087550
21	Quarter To Counter Attachment	69.5 + 6 * BETA(0.71, 0.923)	0.065392
22	Quarter To Counter Stitching	73.5 + 5 * BETA(0.817, 0.841)	0.125617
23	Thread Cutting And Plaster Attachment	UNIF(51.5, 56.5)	0.000000
24	Quarter Zing Zing Stitching	87.5 + 8 * BETA(0.904, 1.06)	0.150812
25	Vamp To Quarter Attachment	170 + 9 * BETA(0.566, 0.566)	0.156765
26	Vamp To Quarter Stitching	UNIF(44.5, 49.5)	0.000000
27	Vamp Lining To Tongue Stitching	TRIA(31.5, 35, 35.5)	0.066122
28	Quarter Lining To Quarter Stitching	UNIF(44.5, 49.5)	0.000000
29	Quarter Lining To counter Attachment	69.5 + 8 * BETA(0.8, 0.623)	0.150732
30	Quarter Lining To Counter Stitching	UNIF(76.5, 83.5)	0.057143
31	Vamp Lining To Quarter Attachment	UNIF(62.5, 67.5)	0.000000
32	Vamp Lining To Quarter Stitching	71.5 + 9 * BETA(0.513, 0.513)	0.078578
33	Thread Cutting And Plaster Attachment	37.5 + 5 * BETA(0.841, 0.817)	0.125617
34	Toe Puff Attachment	78.5 + LOGN(1.51, 1.3)	0.042476
35	Quarter To Lining Stitching	23.5 + 3 * BETA(0.625, 0.625)	0.004634
36	Folding	63.5 + LOGN(1.51, 1.3)	0.042476
37	Hand Folding	TRIA(33.5, 36, 38.5)	0.201600
38	Hammering	96.5 + 10 * BETA(0.706, 0.634)	0.068216

39	Tongue To Lining Attachment	110 + 11 * BETA(0.445, 0.445)	0.089964
40	Toe Puff Attachment	59.5 + 3 * BETA(0.625, 0.625)	0.004634
41	Lining Trimming	UNIF(31.5, 36.5)	0.000000
42	Punching To Make Hole	125 + WEIB(2.78, 1.53)	0.090176
43	Heel Counter Attachment	37.5 + LOGN(2.5, 3.42)	0.054485
44	Back Part Molding	133 + 8 * BETA(0.37, 0.288)	0.080733
45	Vamp Attachment	51.5 + LOGN(1.51, 1.3)	0.042476
46	Cleaning/ Quality Inspecting/	59.5 + 11 * BETA(0.39, 0.39)	0.096205
47	Lacing For Temporary	75.5 + 11 * BETA(0.7, 0.874)	0.170779
48	Sock Line To Sponge Attachment	87.5 + 17 * BETA(0.261, 0.161)	0.074966
49	Sock Line To Sponge Stitching	TRIA(25.5, 29, 29.5)	0.066122
50	Final QC	14.5 + 4 * BETA(0.901, 0.995)	0.007483
Lasting Department Operations			
51	last loading and insole	65.5 + 10 * BETA(0, 0)	0.100000
52	last cleaning	37.5 + 7 * BETA(1.44, 1.36)	0.053315
53	loading upper, toe cap steel	52.5 + 5 * BETA(1.51, 1.51)	0.015532
54	Roughing around center of out sole	33.5 + 5 * BETA(1.26, 1.6)	0.023662
55	out sole cleaning	29.5 + 6 * BETA(1.12, 0.976)	0.031666
56	attaching insole on last	NORM(28.7, 2.97)	0.202024
57	back part molding	NORM(45.5, 1.12)	0.036742
58	insert to steam Upper	16.5 + 12 * BETA(1.04, 0.933)	0.035540
59	insert last and side closing	34.5 + 4 * BETA(0.893, 0.755)	0.000370
60	apply glue on sides of the upper	34.5 + 3 * BETA(0.766, 0.766)	0.008939
61	insert to steam	53.5 + 4 * BETA(1.87, 2.09)	0.010753
62	creaming on upper and inserting in heat tunnel	58.5 + 7 * BETA(1.42, 1.5)	0.011104
63	Pounding	20.5 + 13 * BETA(1.5, 0.628)	0.115913
64	in process quality inspection	34.5 + 3 * BETA(2.11, 1.86)	0.001231
65	first level upper roughing	32.5 + 4 * BETA(1.86, 2.25)	0.000813
66	second level upper roughing	34.5 + 4 * BETA(0.868, 1.3)	0.014664
67	first adhesive coating on upper	TRIA(59.5, 63.4, 65.5)	0.029293
68	first adhesive coating on out sole	TRIA(61.5, 65.5, 66.5)	0.010000
69	second adhesive coating on upper and sole	25.5 + 5 * BETA(1.19, 0.671)	0.002475
70	sole and upper dryer sole	NORM(27.8, 1.33)	0.022458
71	sole and upper re-activator	30.5 + 6 * BETA(1.15, 1.15)	0.067916
72	attaching sole with upper	TRIA(41.5, 45.4, 47.5)	0.058353
73	attaching sole with upper and pressing	81.5 + WEIB(3.49, 1.84)	0.034252
74	remove temporary shoe lacing	32.5 + GAMM(0.512, 3.32)	0.00636
75	de-lasting cleaning	TRIA(12.5, 15.4, 16.5)	0.009569
76	cleaning excess glue	39.5 + 6 * BETA(1.57, 1.29)	0.024616
Finishing & Packing Department Operations			
77	ironing to remove wrinkle	53.5 + 8 * BETA(0.394, 0.356)	0.044116
78	painting on over rough place	13.5 + 3 * BETA(1.31, 0.875)	0.001747
79	apply cream on upper	17.5 + 3 * BETA(1.11, 1.45)	0.001798
80	apply glue and insert sock lining	15.5 + ERLA(0.38, 5)	0.001574
81	shoe lacing	28.5 + LOGN(2.41, 1.8)	0.047330
82	inserting tissue paper	23.5 + 5 * BETA(1.58, 1.44)	0.013611
83	final brushing for shine	TRIA(12.5, 15.4, 16.5)	0.009569
84	final quality inspection	UNIF(19.5, 23.5)	0.050000
85	Arrangement by Model	13.5 + GAMM(0.5, 4.2)	0.006349
86	packed and labeling	TRIA(22.5, 26.1, 28.5)	0.006421

Chapter Five

5. Model Development for Simulation

5.1. Introduction

The model development was started with the transactions of the entity, the location of the workstations, the generation of a path network and resources, a demonstration of the arrival, and processing programming. The initial model representing all the activities that involve cutting, stitching, and lasting department manufacturing processes was modeled to imitate the real system. There are different software programs that can be used for the simulation model development of any system. It differs based on flexibility, ease of use, appropriateness, etc. Simulink 8, Enterprise Dynamics, Witness, Arena TM, etc. are among some of the software programs used to simulate any system.

All software has a different version that is updated every time. In this thesis, cracked Arena 14.0 simulation software was used for modeling the production lines and Opt Quest software was used for optimization model development. This software was selected due to its availability, flexibility, ease of use, unlimited entity creation capability, and appropriateness for discrete types of simulation.

5.2. Modeling Assumptions

The three production lines are cutting, stitching, and lasting. There are distinct inputs and outputs for each line. The following presumptions were made as a result: The individual parts of the shoes are not regarded as distinct entities. Modeling and analysis are done individually for each production line.

- One pair of shoes' worth of raw materials is viewed as a single unit.
- For a durable line model, bottoming and finishing techniques are incorporated.
- There is always working in front of each workstation, preventing it from going hungry.
- The action plan/work instruction (push) production system is known as a production line.

With the help of the output of those chosen items, manufacturing line efficiency is evaluated overall. The modeling technique in this work followed the fundamental processes of issue characterization and study design, data gathering and model definition, model formulation and construction, model verification and validation, experimentation, and analysis.

5.3. Formulating a Problem and a Study Plan

Analyzing the problem and goal setting is the first stage in the problem formulation phase of simulation model construction. Decisions need to be made in a number of fundamental modeling process domains at this stage. The interest problem is the first area that needs decision-making. Inadequate use of production resources, including machinery and labor, as well as an unstructured flow of operations in the production lines, are the main issues addressed in this thesis. It happens when manufacturing lines have poor throughput, large work-in-process, low efficiency, and long cycle times. Simulation-based performance analysis of the company's manufacturing line is the study's main goal. Finally, an enhanced performance suggested model is created. To be asked certain questions

- How can the performance of the production line be improved?
- How can bottleneck of the production line be identified?
- How can develop appropriate optimization model that assigns work elements to workstations such that assembly cost is minimize of the case company?

5.4. Data Collection and Model Definition

First, in this stage, the core items are chosen whose production lines will be modeled. Hence, the fundamental goods, which are mostly created in production lines, were chosen based on criteria such WR 179101, Eligin, and AI2014 for men, G4439101 for women, and C32021 for children. Because these items are often manufactured in a small number of production lines, it is presumable that useful information about the production line may be gleaned from the output of their production line model. The following information is collected for each basic product after the basic items have been chosen: Number of resources required for each product.

- Each product's production procedures are identified, as well as the order of operations that each one requires.
- Following the collection of the aforementioned data, the following times are measured:
- Processing time, cycle time between sub-activities, and arrival intervals.
- Period of machine failure.
- Product manufacturing costs.

5.5. Model Formulation and Construction

Three manufacturing lines cutting, stitching, and lasting are independently modeled; modeling the current production lines for basic items is beneficial to enhance the flexibility of the suggested model and to provide results that are more dependable. Except on Saturday, when they only work in the morning, ASSC has six working days with eight hours of labor every day. On occasion, they are also available on Sunday and Saturday afternoons.

The fundamental components for ARENA modules were utilized to design the model. These modules are selected from panels in the project bar and consist of the flowchart and data items that specify the process to be emulated. Modules with flowcharts are used to describe the model's dynamic processes. They are referred to as nodes or locations that serve as the origin or destination of entities inside the model. In the spreadsheet view of the model, data modules are a collection of objects that specify the properties of different process elements, including queues and resources, among others.

5.5.1. Cutting Production Line Model

The fundamental processes included cutting of several components, including upper and lining leather, the heel counter, the toe puff and foam, and prefabrication. Raw materials like leather, lining, and reinforcement are loaded, and the finished products are prefabricated parts for various components. The entities in the cutting section are the reinforcement loaded, lining, and leather. The amount of leather needed for each pair of shoes is taken into account while evaluating these raw materials, not their square footage. A variety of arena flow modules was included in the building of this simulation model. Create module is used as the starting point for entities entry into a simulation model, to integrated over all cutting model, upper leather, lining leather, toe puff, heel counter and foam entities are created based on a time between arrivals.

- To assign new values for entity types, entity sequences, arrival times, and process times, utilize the Assign module.
- The station module designates a station as the actual or logical site of processing.
- The simulation's primary processing mechanism, the process module determines how long it takes each activity to be completed.
- The Decide module enables decision-making based on a proportion of waste raw material.
- Entities in a simulation model have a Dispose module as their endpoint.

- The exit module onto the designated hand truck releases the entity's cells.
- The simulation model's record module is used to gather information about each entity's cycle time, flow time, and output.
- The set of objects in the spreadsheet view of the model that specify the properties of various process elements are referred to as data modules.
- In a simulation, the entity module defines the different entity kinds and their starting image values.
- Changes to the ranking criteria for a particular queue may be made using the queue module. The default-ranking rule for all queues is First In, First Out.
- The resource module describes the resources in the simulation system, as well as their capacity, availability, failures, and stated states.
- Variable modules are used to specify worker and machine productivity.
- The set module defines the resource sets that are assigned to each process.
- The busy, idle, and failure states of a resource are defined using the State Set module.

Therefore, over all integrated models Existing for each activity listed below.

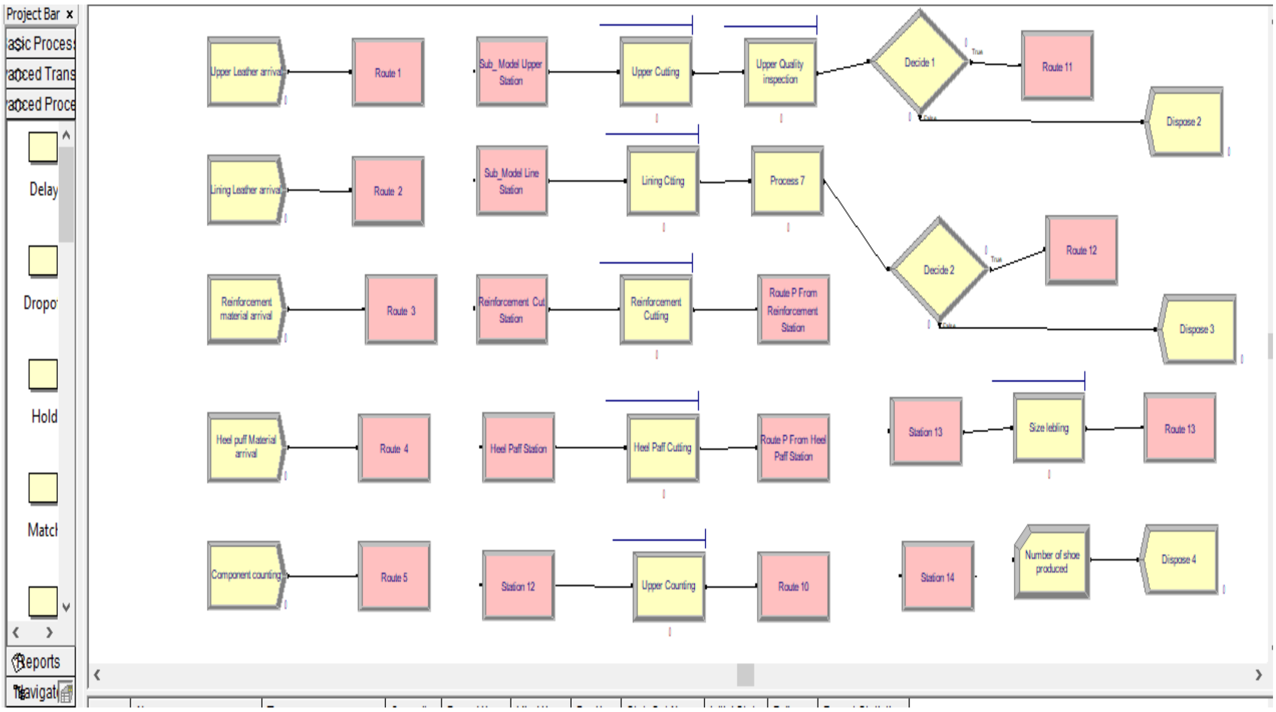

Figure: 5. 1. Over all integrated models existing for each activity cutting section (source: Own)

In order to create the overall integrated model for cutting section seen in the figure below, the sub models were combined with other flow modules.

5.5.2. Stitching Production Line Model

To create the upper in this style, many parts, including the lining, quarter, vamp, toecap, face, tongue, and heel counter, are sewn together. It will be challenging to think of each component as a separate entity because a single pair of shoes is made up of several components. In addition to the following flow and data modules, other flow and data modules utilized in the development of cutting production lines are employed in the construction of this simulation model. An entity is given access to one or more conveyor cells so they can travel between stations with the use of an access module.

- ✓ Convey modules transport objects from their present station location to a predetermined destination station by moving them along a conveyor. The conveyor's speed (defined in the Conveyor module) and the distance between the stations determine how long it will take to move an entity between two stations (specified in the Segment module).
- ✓ To specify the order in which entities should go through the model, utilize the sequence module. The stations that an entity will visit are listed in an ordered list in a succession.
- ✓ The segment module of a conveyor defines the separation between two stations in its segment set, and the conveyor module permits the creation of an accumulating conveyor for entity movement between stations.
- ✓ The flat belt conveyor on the stitching line is 16 meters long and is laid out in a U shape. It rotates completely in an average of 110 cm per seconds, resulting in an average conveyor velocity of 0.8 meter/second

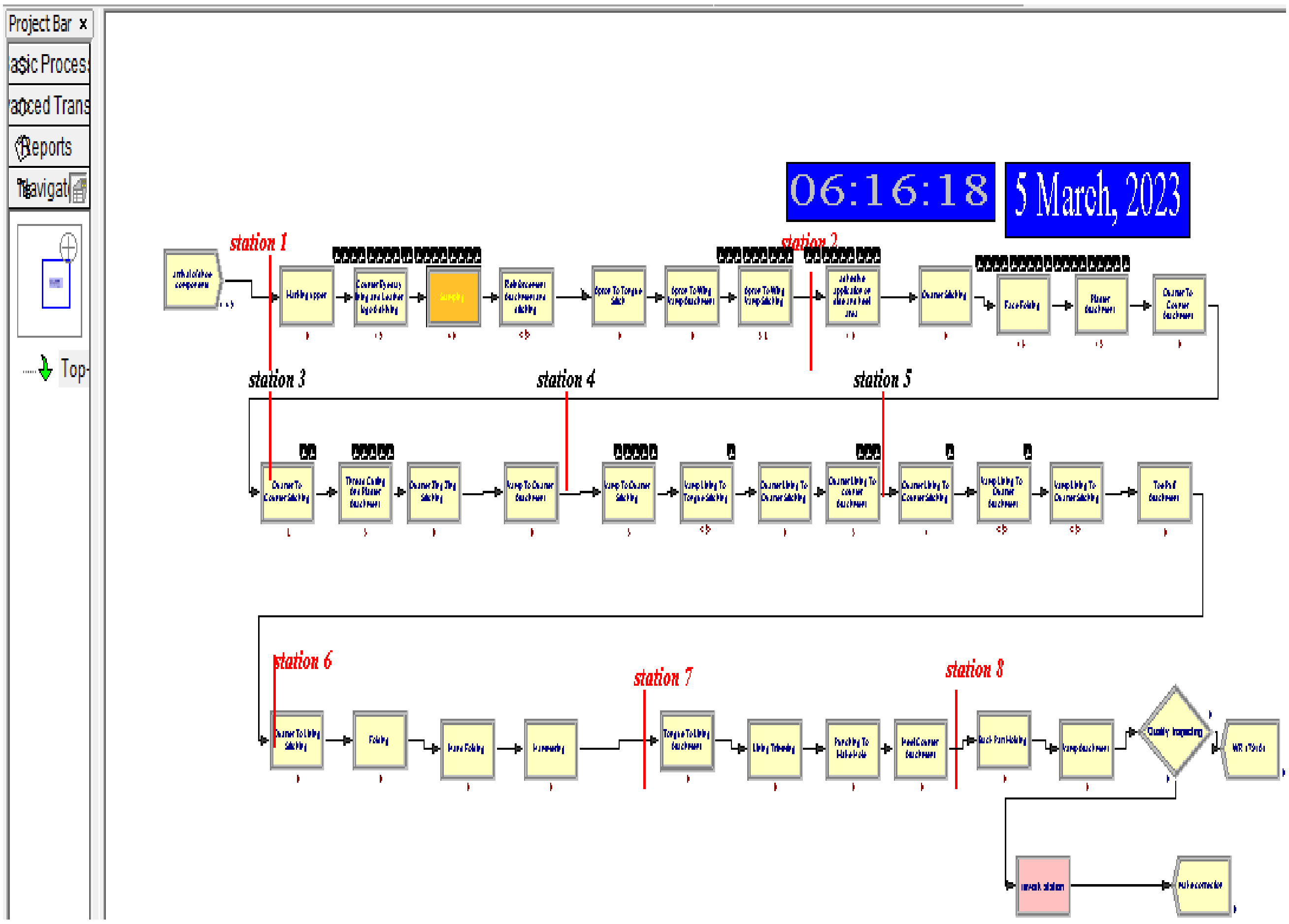

Figure: 5. 2. Existing Stitching production line model (source:Own)

The key performance indicators of stitching model

- Overall production is the number of components stitch per day (8 hours).
- Cycle time was calculated using the formula (0.9 meter per seconds)/(stitched upper part, Number Out+1).
- Work in process
- Absolute worth of the work-in-progress (456 -stithed upper part. Number Out).
- Efficiency was determined using the formula (stitched upper part.NumberOut)*100/.

5.5.3. Lasting Production Line Model

For building the cutting line and stitching line for this simulation model, data and flow modules were employed. In the lasting line, the finished product is made up of the upper, sole, and insole. Hence, the top, sole, and insole that are needed for a single pair are treated as a single unit. Final line also features a 16-meter-long flat belt conveyor that is configured in a U shape, with an average speed of 0.8 meter per second.

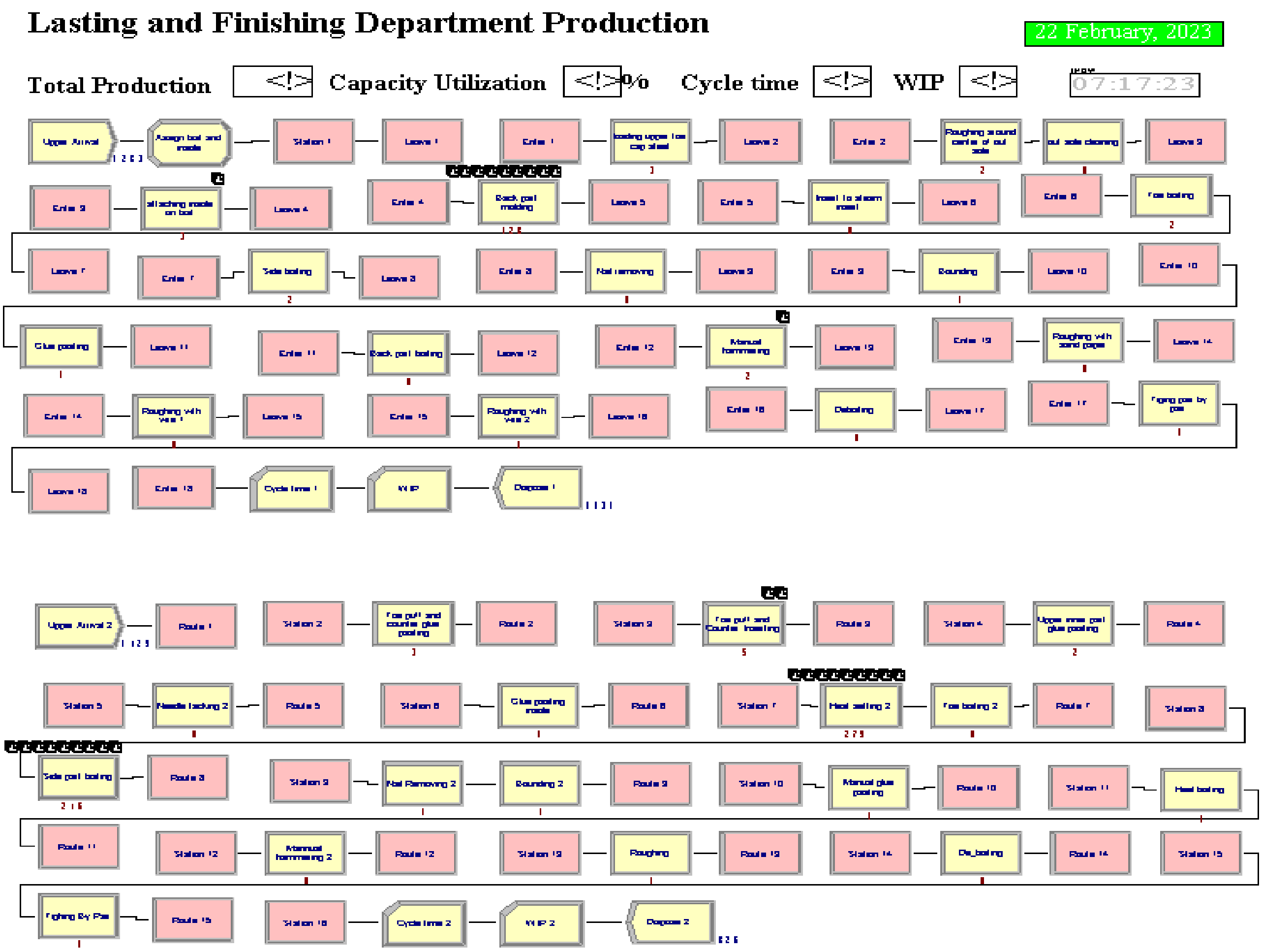

Figure: 5. 3. Existing areana simulation lasting and finishing model

- Overall production is how many pairs of shoes are made in a day (8 hours).
- Cycle time: This expression was used to compute cycle time: (seconds / (finished shoe portion NumberOut+1).
- Work-in-progress - Absolute value of finished shoe part #450.
- "Out" (number).
- The phrase "cycle time" (the output of the finished shoe) was used to calculate efficiency.

Run Length

The analyst with the help of a well-designed simulation replication can obtain the statistical data from simulation runs. To get accurate statistics, it is important to minimize both the quantity and duration of replications. The model must execute an initial set of replications to compute the sample average, standard deviation, and confidence interval before deciding on the number of replications.

Simulation models typically have probabilistic input distributions. Naturally, the output performance measurements will vary to some extent as a function of the input variability. It is improper for the simulation practitioner to suggest any particular course of action based on the findings from a single simulation run or replication because the output metrics exhibit some fluctuation. Choosing a starting number of replications is the first step in the replication analysis procedure. Next, at a certain degree of confidence, the summary statistics from this initial set of replications are utilized to determine whether additional replications are necessary. The summary statistics and replication formulas for the process must be updated if extra replications are necessary.

In the cutting, stitching, lasting, finishing, and packing processes, Table 5.1 displays the average output and standard deviation for 10 replications. You may figure out the data's standard error by:

Where t is the probability distribution value for 1-a /2 from table n-1, and s: replication's average standard deviation (it is the amount of dispersion around the mean value that data may exhibit) n: the number of observations included in the sample

The standard error measures how much data may vary from the mean value. The level refers to the degree of assurance with which we intend to undertake our analysis. The level is 1 minus the confidence level, or 0.05, if we want to have 95% confidence in the analysis' findings. We split the level in half since we are interested in the dispersion around both sides of the mean. The replication averages' sample standard deviation can be calculated using the following formula:

$S=\sqrt{}\Sigma xi-xn1n-1$

Table:5. 1. Summarize Simulation results and Number of replications of production section

Number of replications	Cutting	Stitching	Lasting and Finishing
1	500	456	450
2	490	485	480
3	460	455	450
4	478	473	470
5	495	490	485
6	501	498	494
7	497	494	490
8	488	483	480
Mean	460	455	450
Std devotion (s)	2.83	3.81	1.35
Half-width (ho)	2.36	209.97	555.56
$n\cong z1-\alpha/22s2h2$	15.6	15.6	15.6
$n\cong noh02h2$	22	22	22

The starting half-width (ho) is 2.36, 209.97, and 555.56 for the cutting, stitching, lasting, and finishing sections, respectively. The initial replication (no) is 8 for all manufacturing lines. By using the 95% confidence level, which is 1.96 from the z table, and assuming that h = 1.4 for cutting, 8.1 for stitching, 30.5 for lasting and finishing parts, the ultimate half-width can be determined as follows: $n \cong \frac{noho^2}{h^2}$

Where, no is the number of initial replications we had and ho is the half-width.

$n \cong \frac{1.96*2.83^2}{1.4^2}$=30.73/1.96=15 Replications

$n \cong \frac{8*2.36^2}{1.4^2}$=44.5/1.96=22 Replications

To obtain a low tolerable error for the cutting section, 22 replications are performed. The stitching, lasting, and finishing parts all have a comparable amount of replications.

5.6. Model Verification

Verifying a model's behavior to make sure it is as expected given the assumptions made throughout the modeling process is known as model verification. The accuracy of the model is generally evaluated. For the model's verification, various techniques have been used.

- The model logic and data can be easily verified by allowing only one entity to enter the system and then closely monitoring that entity. Allowing just one creature to pass through the entire system in this simulation model had no effect at all.
- To quickly confirm that the model logic and data are accurate, restrict system access to a single entity and then follow it. It made absolutely no difference in this simulation model to permit only one creature to pass through the entire system.
- The simulation model is examined to see if the output complies with some industrial laws.

5.7. Model Validation

Making sure that the simulation model acts exactly like the real system and validating the simulation model by contrasting its results with those of the real system are both parts of the process known as model validation. In this study, historical data validation is one of many validation strategies used. The monthly production report was obtained for this purpose in the event that previous data was available to validate the model; for further information, see the Appendix. As a result, the study question was transformed into null and alternative hypotheses as the first step of the hypothesis testing process.

Are the results of the simulation model runs and the actual amounts produced by each production the same or different?

Nothing to suggest the hypothesis is accepted and correct since Hn=x, the model and actual production amount are same.

Perhaps instead the model and the amount of production actually achieved are not equal, hence the hypothesis is invalid and rejected.

With the following formula, a test statistic was generated from the data:

Table:5. 2. Displays the computed z value for various models.

Production line	Actual Production 23 days				Simulation result (17 replication)	
	Days	µ	δ	Z value	Production X	calculated z value
cutting line	23	250	25.2	± 1.96	255	Z = 1.02
Stitching line	23	233	18.3	± 1.96	240	Z = 1.91
Lasting line	23	216	11.5	± 1.96	220	Z = 1.73

$$z = \frac{x - \mu}{\frac{\sigma}{\sqrt{n}}}$$

Where the reference is to the actual daily production of shoes -Population Standard Deviation, Appendix C.

Where x is the average number of shoes created using simulation models per day, n is the number of observations, and is the population standard deviation.

Two tail samples are assumed, with a 2.5% level of significance and a 95% level of confidence. To compare the simulation findings with the actual output, the July 2021 monthly production report was used. Taking into account the number of working days in the month, 17 replications were used.

For every model Z-value is determined by the formula Z= (255-250)/(25.2/5). Z=1.02; less than 1.96; It fits in the region where 0.475 equals 1.96, hence the null hypothesis is accepted.

Calculating the discrepancy between the simulation output and the real data is another method for model validation. The following formula is used to calculate it:

To fulfill the validity level of the generated model to the actual system, according to (Othman, 2017), the value of the discrepancy between simulation output and actual data must be around 10% or less. Calculating the difference (%) is as follow

$$\text{Difference}(\%) = \frac{\text{Simulation output} - \text{Actual data} * 100\%}{\text{Actual data}}$$

$$\text{Difference}(\%) = \frac{255 - 250 * 100\%}{250} = 2\% \text{ Cutting section}$$

$$\text{Difference}(\%) = \frac{240 - 233 * 100\%}{240} = 2.91\% \text{ stiching section}$$

$$\text{Difference}(\%) = \frac{220 - 216 * 100\%}{216} = 1.85\% \text{ lasting section}$$

As a result, the replication produced by the model and the cutting model utilized can both be used and accepted (value = 2% <10%).

5.8. Findings and Analysis of the Model

How much time the modeler wants to spend simulating is known as the replication length. The model was run 22 times with the time units changed to seconds to exclude any modifications that the software might make throughout the simulation. Employees will get 15 minutes for tea breaks during the eight hours of work. The replication time was set at 7.45 hours in order to accurately duplicate the real production system.

Based on the results of the simulation model, the performance metrics for the current manufacturing system and several suggested scenarios to boost output, cut down on production time, cut down on work-in-progress, boost line balance efficiency, cut down on waiting times, and maximize capacity utilization were examined. The daily target for each production line during regular business hours is 4,452 pairs of shoes.

5.8.1. Outcome of Cutting Section Simulation

The operators are only permitted to cut 280 pairs of upper and lining per business rules. Because each entity has a different arrival rate and processing duration, there are bottlenecks in the cutting portion. According to the simulation results, upper leather is the minimal average number produced in the cutting production section. As a result, the output of the top leather affects how well the production area performs. The average output of the cutting section in terms of incoming entities is shown in Figure 5.1.

According to the results of the current cutting section simulation, 7 workstations are assigned to 20 operators. In the production division, 250-shoe component sets are produced on a daily average, with a capacity utilization rate of 56.6%, a WIP of 179 pairs, and a cycle time of 22 seconds. The upper-quality inspection workstation has a maximum average waiting time of 2228 seconds and a maximum average of 59.46 pairs can wait in the same station at once. For counter cutting (Resource 2), the capacity utilization ranges from 19.01% to 99.59.

5.8.2. Interpreting Stitching Model Run Results

The ideal stitching line model produces, on average, 240 pairs of shoes every day, whereas the real stitching line model. The key performance indicators of the stitching production line were identified and analyzed, revealing that there were 56 workers assigned to 43 workstations, an efficiency of 63.4% for the stitching model as-is, a throughput rate of 25 units per hour, a work-in-process rate of 79 units per day, a cycle time of 125 seconds, and an output of 330 stitched shoe parts at the conclusion of replication.

The identification of bottlenecks, which included the fixing of the wing vamp to the cup, fixing of the sponge to the tongue, fixing of the quarter to the lining, and fixing of the sponge on the sock processes that are severely congested in the stitching line, was made possible by high work-in-process counts at each workstation. The wait time for every pair of shoes is more than the time benefit. The entire wait time is zero, save for the bottleneck operations that are highlighted, because entities at bottleneck stations wait longer than they are processed. When resources are distributed unevenly throughout the stations, assembly line balancing is required to share certain idle resources, such as humans and machinery.

5.8.3. Interpreting the Findings of Lasting and Finishing Running Models

The actual lasting line model had 36 workstations and 50 employees, a 66% efficiency, a throughput rate of 30 units per hour, a work-in-process rate of 65 units per day, a cycle time of 78 seconds, and an output of 240 stitched shoe parts at the end of the day. The ideal model of a lasting line produces an average of 220 pairs of shoes per day. Toe and seat lasting, back tacking and inserting lasts, sock inserting, hot blower operation, and cream application are a few processes that experience significant congestion in the lasting line and are the areas where bottlenecks are discovered using high work in process observed at each workstation process. The wait time for each shoe model exceeds the time-added value. Entities at bottleneck stations thus spend more time waiting than they do being processed, and the identified bottleneck processes have zero cumulative wait time. When resources are distributed unevenly throughout the stations, assembly line balancing is required to share certain idle resources, such as humans and machinery.

5.9. New Model Development

Models will be created using data on the typical process time of employees using a predetermined method, the efficiency of assembly line balance, and the design of effective workstations. The average process time was taken for each activity for the best fit of the probability distribution function. Simulation models cannot accurately simulate production lines without taking into account the process time needed by an average skilled operator, working at a normal pace and performing a specific task using a prescribed method.

The goal of line balancing is to distribute the total workload on the assembly line as evenly as possible among the workers and to reduce resource idleness. It is nearly impossible to achieve perfect balance. Assembly line balancing technique is typically used to identify the bottleneck process and to determine the number of workstations. The assembly line was created based on the daily demand for1000 pairs of shoes and the preferred cycle duration of 60 seconds.

$cycle\ time\ = \frac{total\ production\ time}{demand}$= (28,800seconds/1000 units), CT=28.8 seconds/unit

Developed cutting model.

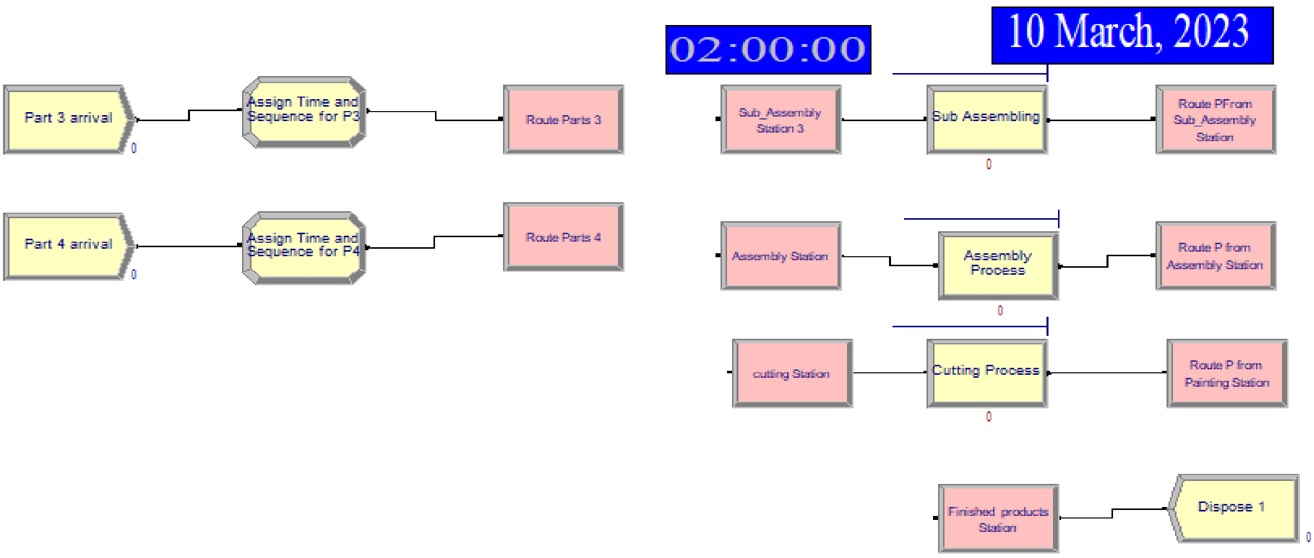

Figure: 5. 4. Developed cutting model.

In the above figure, Different operators at different workstations perform upper and lining cutting. However, it is technically possible to cut the upper and lining part by the same operator at the same workstation.

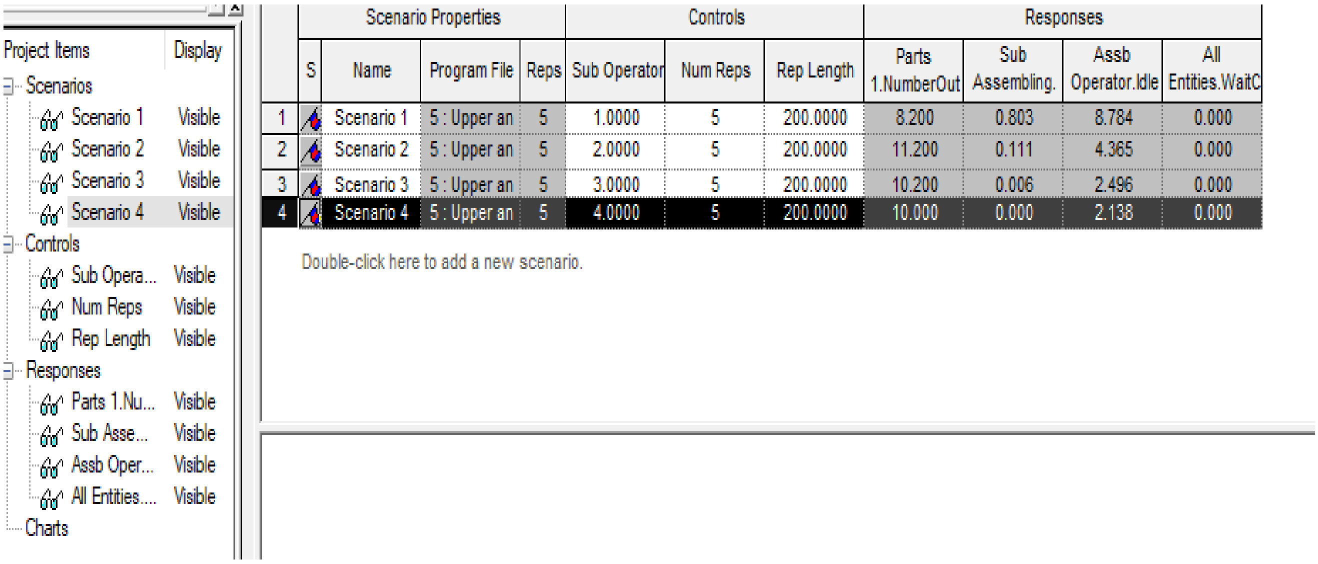

	S	Name	Program File	Reps	Sub Operator	Num Reps	Rep Length	Parts 1.NumberOut	Sub Assembling.	Assb Operator.Idle	All Entities.WaitC
		Scenario Properties			Controls			Responses			
1		Scenario 1	5 : Upper an	5	1.0000	5	200.0000	8.200	0.803	8.784	0.000
2		Scenario 2	5 : Upper an	5	2.0000	5	200.0000	11.200	0.111	4.365	0.000
3		Scenario 3	5 : Upper an	5	3.0000	5	200.0000	10.200	0.006	2.496	0.000
4		Scenario 4	5 : Upper an	5	4.0000	5	200.0000	10.000	0.000	2.138	0.000

Resource

Cost

Idle Cost	Average	Half Width	Minimum Average	Maximum Average
Assb Operator	8.7836	10.68	0.00	18.2430
Painter	11.3651	12.72	0.7439	25.9934
Sub Operator	24.3209	10.24	12.6019	35.2074

Figure: 5. 5. Cutting department Scenario

According to the results of the current cutting section simulation, 7 workstations are assigned to 20 operators. The production section's average daily production output is 2228.56 sets of shoe components, with a capacity utilization rate of 56.6%, 179 pairs of shoes in work-in-progress, and a cycle time of 22 seconds. The upper-quality inspection workstation's maximum average wait time is 3000 seconds, and there can be a maximum of 79 pairs waiting in line at once. Table 4.5, "Cutting production capacity utilization," displays the capacity use of the resources in this area.

Developed Stitching model.

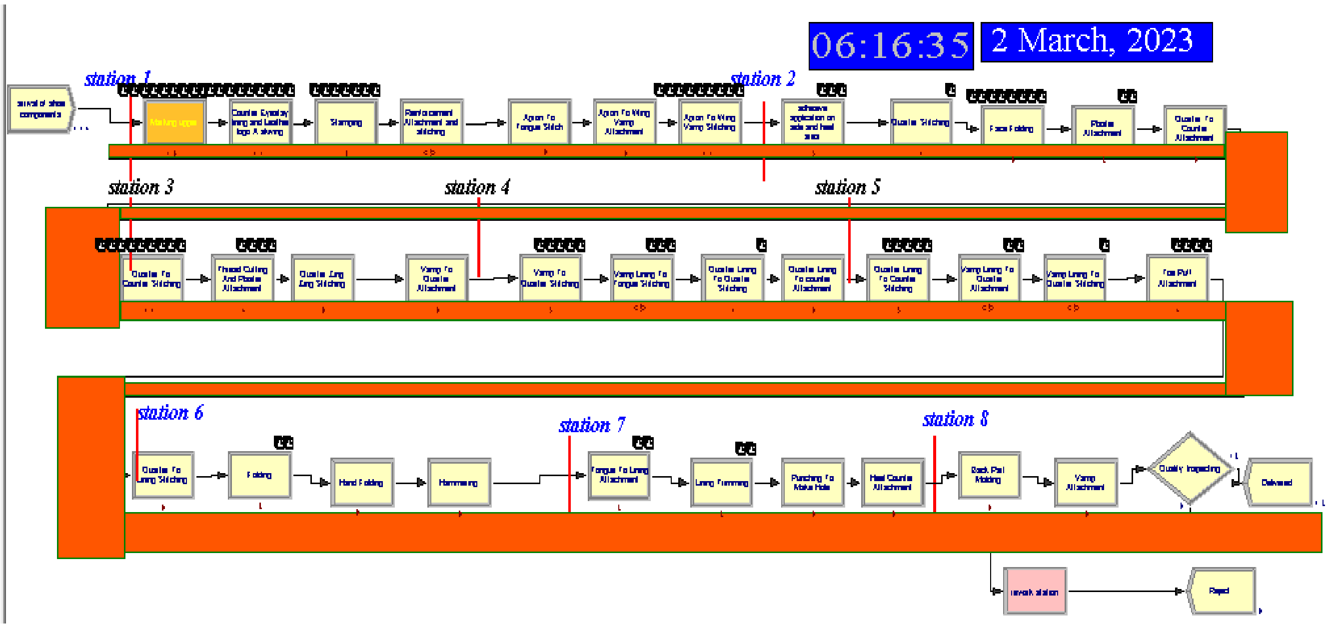

Figure: 5. 6. Developed Stitching model

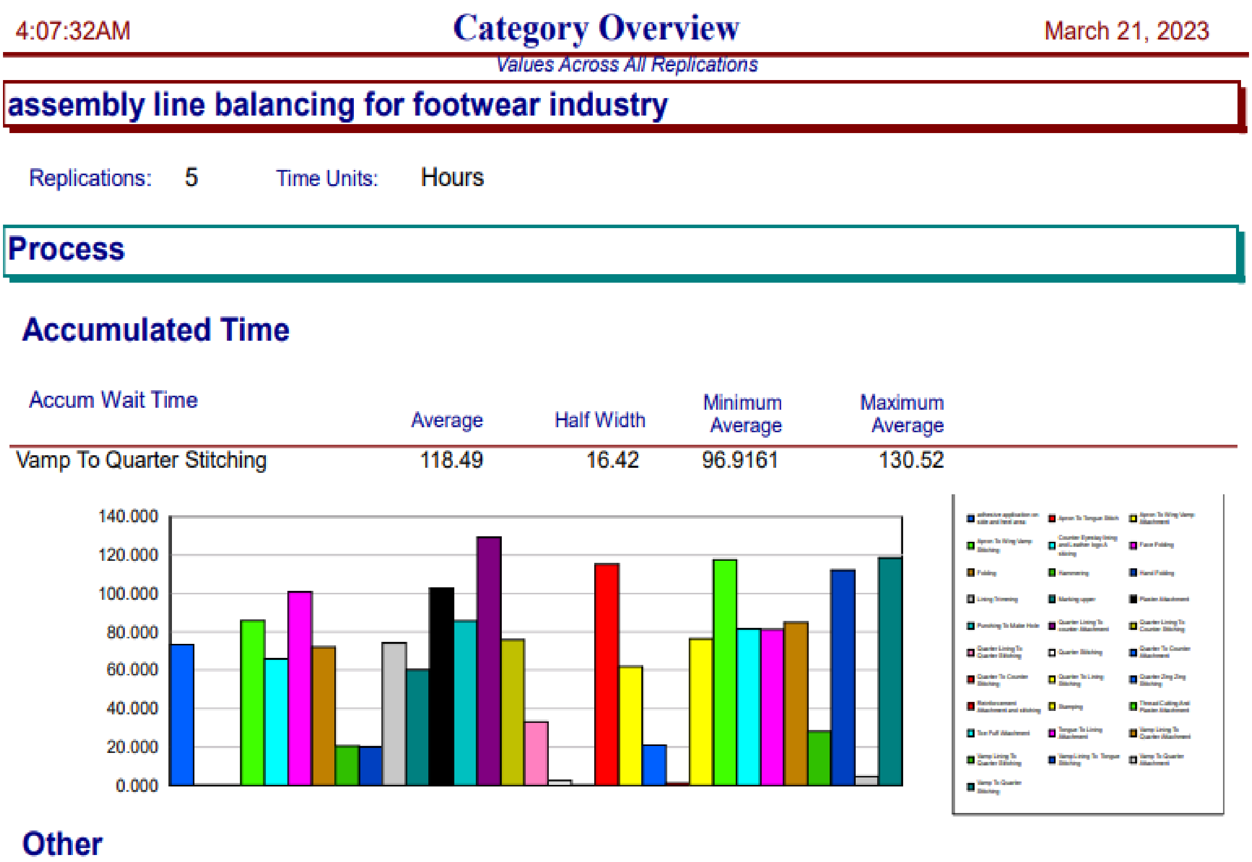

Figure: 5. 7. Stitching production line's capacity

The stitching section's subsequent workstations do not call for the completion of preparation tasks. A WIP that will serve as an input for the stitching part may be created by separating preparation tasks from the stitching area and adding a new section for them.

Figure: 5. 8. Developed Lasting and finishing model

6:30:20AM **Category Overview** March 22, 2023

Values Across All Replications

Lasting Production Line

Replications: 5 Time Units: Seconds

Entity

Other

Number In	Average	Half Width	Minimum Average	Maximum Average
WR17 9101	1368.80	37.26	1318.00	1389.00
WR179101	1514.80	40.07	1472.00	1559.00

Number Out	Average	Half Width	Minimum Average	Maximum Average
WR17 9101	1163.00	2.78	1160.00	1166.00
WR179101	847.80	4.51	844.00	853.00

WIP	Average	Half Width	Minimum Average	Maximum Average	Minimum Value	Maximum Value
WR17 9101	116.45	25.74	82.3623	133.01	0.00	234.00
WR179101	358.36	21.60	332.47	380.12	0.00	715.00

6:30:20AM **Category Overview** March 22, 2023

Values Across All Replications

Lasting Production Line

Replications: 5 Time Units: Seconds

Key Performance Indicators

System	Average
Number Out	2,011

Project Items	Display
Scenarios	
Existing Sc...	Visible
Scenario 1	Visible
Scenario 2	Visible
Scenario 3	Visible
Scenario 4	Visible
Controls	
Toe Lastin...	Visible
Back Part ...	Visible
Responses	
WR17 910...	Visible
Toe lasting...	Visible
Back Part ...	Visible
Cycle time 1	Visible
Cycle time 2	Visible
WIP	Visible
WIP 2	Visible
Charts	

	Scenario Properties				Controls		Responses						
	S	Name	Program File	Reps	Toe Lasting MC	Back Part Lasting MC	WR17 9101.Number	Toe lasting.Queu	Back Part Lasting	Cycle time 1	Cycle time 2	WIP	WIP 2
1		Existing Sce	1 : lasting exs	5	3.0000	1.0000	1163.000	0.000	0.826	22.787	29.942	365.276	378.833
2		Scenario 1	1 : lasting	5	3.0000	1.0000	1163.000	0.000	0.826	22.787	29.942	365.276	378.833
3		Scenario 2	1 : lasting exs	5	3.0000	1.0000	1163.000	0.000	0.826	22.787	29.942	365.276	378.833
4		Scenario 3	1 : lasting exs	5	3.0000	1.0000	1163.000	0.000	0.826	22.787	29.942	365.276	378.833
5		Scenario 4	1 : lasting exs	5	3.0000	1.0000	1163.000	0.000	0.826	22.787	29.942	365.276	378.833

Double-click here to add a new scenario.

Figure: 5. 9. Lasting department Scenario

There are two subunits inside the lasting section. The identical sorts of shoes are produced by both units 1 and 2. The two lasting units could be combined because there was enough floor space. The permanent section supervisor was also consulted about and gave his or her approval for this improvement. Consequently, combining two distinct lasting pieces will have the desired effect.

Efficiency is calculated as (sum of task times) / (cycle time * work station).

Effectiveness as of Now = 65.7%

Efficiency is the product of job times and (cycle time * work station).

Efficiency as of Now = 66%

The efficiency of the assembly line has increased, with the stitching line going from 65.7% to 69.45%, the lasting line going from 66% to 70.1%, and the number of workstations.

In general, underutilization of resources across all sectors and an uneven allocation of work explain why resources are not used effectively. While some of the employees are engaged in value-adding tasks, others are not. In other words, operators spend the majority of their time engaged in non-value-adding tasks like waiting for assignments or making pointless moves on the factory floor. A bottleneck operation is the most fundamental reason for waiting times. When one portion of a process moves more quickly than the other parts, there will be waiting; the processes that follow the slower process must wait for work from the slower process. The capacity utilization report shows that resource usage is unbalanced across all production segments.

5.10. Model Analysis of Results

Based on the initial aims, the proposed model's results were examined. The goals were to increase key performance indicators like throughput, cycle time, WIP, and efficiency. Based on snapshots and the model at the fifth replication, the throughput rate increased, the WIP decreased, and the efficiency of cutting production lines climbed from 56% to 63%. This is as a result of the removal of the bottleneck found at the upper leather cutting and lining leather cutting processes as well as the configuration of the workstation set up in accordance with the intended distance that reduces needless transportation of materials and personnel. The stitching manufacturing line's efficiency went from 65.7% to 69.45%, and the WIP, cycle time, and throughput rate were improved. The line's efficiency increased as a result of the elimination of bottlenecks that were produced during the following operations: sewing the wing vamp to the cup, attaching the sponge to the tongue, attaching the quarter to the lining, and attaching the sponge to the sock. The number of workstations decreased from 86 to 64 and the number of employees decreased from 113 to 101 as a result of the efficiency improving due to relatively smooth assembly line workstation balance and good workstation arrangement in the shop floor. This resulted in a 6.45% increase in efficiency.

Because of the bottlenecks being removed at the toe and seat lasting, back tacking and insertion last, sock inserting, hot blower, and cream application processes, lasting line production line efficiency went from 66% to 70.1%. There are now 33 instead of 36 workstations, and there are now 45 instead of 50 direct workers. Due to the assembly line balance of workstation placement and arrangement, the line's efficiency increased.

5.11. Evaluating an Optimization Model's Output

The last line optimization model, which was developed and reviewed in greater depth here, was used to build a lasting line simulation model. Five scenarios were examined for the best solutions.

The five scenarios are:

- Output amount
- Cycle time reduction
- Work in Process
- Profit maximization
- Cost minimization.

The table below analyzes the lasting line model's costs and benefits.

Table:5. 3. Costs and benefits Analysis

Lasting Model	Total manufacturing costs	Total seals volume	Total gross profit in birr
Model optimized	575,567 Birr	923,645 Birr	348,078 Birr
System currently in place	456,285Birr	725,950 Birr	269,665 Birr
Difference			78,413 Birr
			12%

5.12. A Summary of The Study

Performance analysis and modeling studies pertaining to manufacturing systems have been evaluated. Arena 14.0 simulation software is used in this study as a modeling tool for the selected production lines utilizing basic product kinds. It incorporates processing time, machine failure, workstation layout, and optimization to reveal the cost effectiveness of the produced models. The production lines have been directly observed, and stopwatches have been used to record process time. Production and operation management (POM software for Windows 3) was utilized as a quantitative approach to establish the sample size, average, and sample standard deviation of each process's time study at a 95% level of confidence and 5% accuracy.

The data was then examined, and using the arena input analyzer, a suitable mathematical model was chosen from those that best fit the probabilistic distribution. The model was then validated and verified to make sure it behaved as the real system would, and finally, analysis of the simulation model was carried out.

To be model key performance indicators improved, but this does not mean that productivity improved, so optimization model development for the to be models that give the best and optimum output within the given resources or best alternative resource usage combination aside from its optimum capacity utilization of the resources under the given situation Therefore, using the suggested optimized models, the daily production volume of shoes increased by 9 pairs, resulting in a 12% increase in monthly gross profit.

Chapter Six

6. Conclusion and Recommendations

6.1. Conclusion

For the production lines of Anbessa Shoe Shear, company a manufacturing system model and performance improvement simulation were constructed in this study. Using Arena Simulation 14.0 software, simulation models were created, verified, verified, and assessed. Separate simulation models for cutting, stitching, and continuous production lines were created. Job balance, production costs, and selling prices. According to the study of simulation runs, the manufacturing lines perform poorly in comparison to the degree of performance that was estimated. Owing to the inability to undertake preventative maintenance, an unbalanced distribution of work areas on the assembly line, and insufficient shop floor preparation. In order to save 227,000 EB every month, line-balancing procedures should be employed in order to achieve one of the research's specific goals of minimizing workstations and manufacturing costs.

As a result, for cutting, stitching, and continuous lines, respectively, the efficiency of the suggested model analysis rose by 7%, 3.45%, and 4.1%. Using Opt Quest software, it was possible to compare the suggested model's overall performance characteristics to the current production system and its cost benefit analysis, yielding results of 22.78% and 29.44%, respectively. This led to a 12% increase in the company's gross profit. Therefore, it can be said that the suggested model is beneficial to the business.

6.2. Recommendations

It will be difficult for ASSC to compete in today's competitive market if it continues to face its many productivity-related issues. Hence, in order to improve the current performance of the organization, the researcher suggests that the presented model be used. The following recommendations are made:

- ✓ The company must implement resource optimizations (of materials, equipment, and labor), paying particular attention to how to correctly ensure that all materials are on hand before each production department's schedule.
- ➢ The intended performance level shall be used to balance the assembly line.
- ➢ Pull production strategies outperform push production strategies in terms of reducing bottlenecks brought on by high levels of work in progress.

- Using software for arena simulations, the external supply chain will be further investigated.
- Similar to these already-created models, the remaining three assembly lines will also be modeled.

6.3. Future work

- First of all, it presents a problem to use this model with more precise data and to use actual data to test new configurations and possibly implement one of them.
- These set of machines are accurate edge turning system in all production department.
- By using new technology, which used to make small articles with high quality in terms of folding, gluing and assembling, hot stamping machines.
- Then, it inspires you to keep working in this profession and apply what you have learned there to other industries.

References

Addis, S. (2020). Line Balancing and Layout Model for Productivity Improvement in Leather Footwear Industry. Industrial Engineering Letters. https://doi.org/10.7176/iel/10-2-03

Ahmed, S. (2015). Productivity improvement by line balancing in closing room for the production of footwear PRODUCTIVITY IMPROVEMENT BY LINE BALANCING IN CLOSING ROOM FOR THE PRODUCTION OF FOOTWEAR. January 2005.

Akter, S., & Hossain, K. R. (2017). Analysis on the proper utilization of man and machine to improve the efficiency and a proper line balancing of a sewing line: A case study. International Journal of Scientific & Engineering Research, 8(12), 778–784.

Ali, N. (2018). a Case Study in Productivity Improvement in Footwear Industry. March.

Ayehu, M. (2009). SCHOOL OF GRADUATE STUDIES Simulation Modeling and Performance Analysis of Addis Ababa University Faculty of Technology.

Work Line Balancing and Production Efficiency of Manufacturing Firms in Rivers State, Nigeria, 10 American Journal of Industrial and Business Management 45 (2020). https://doi.org/10.4236/ajibm.2020.101004

Chen, J. C. J., & Chen, J. C. J. (2014). Simulation Modeling and Analysis for Stitching Line of Footwear Industry. International Conference on Industrial Engineering and Operations Management, 1099–1106.

Cherkos, T. (2011). Performance Analysis and Improvement of Ethiopian Leather Footwear Factories : School of Graduate Studies Addis Ababa Institute of Technology Mechanical Engineering Department Industrial Engineering Chair Performance Analysis and Improvement of Ethiopian.

Cherkos, T. (2016). Company-wide Process-based Performance Evaluation in Ethiopian Leather Footwear Industry.

Definition of Observed Time _ Chegg. (n.d.).

Elia, A. K., & Choudhary, D. (2014). Optimization of balancing for a mixed multi model assembly line. 5(4), 631–638.

Grünberg, T. (2007). Performance improvement. In Journal of Infusion Nursing (Vol. 27, Issue 6). https://doi.org/10.1097/00129804-200411000-00002

Gundogar, E., Sari, M., & Kokcam, A. H. (2016). Dynamic bottleneck elimination in mattress manufacturing line using theory of constraints. SpringerPlus, 5(1), 1–15. https://doi.org/10.1186/s40064-016-2947-1

Hailemariam, D. (2009). Mixed Model Assembly Line Balancing Using Simulation Techniques School of Graduate Studies Faculty of Technology Mechanical Engineering Department Mixed Model Assembly Line Balancing Using Simulation Techniques A Case Study in Ambassador Garment and Trade.

Islam, M. S., Sarker, S., & Parvez, M. (2019). Production Efficiency Improvement by Using <i>Tecnomatix</i> Simulation Software and RPWM Line Balancing Technique: A Case Study. American Journal of Industrial and Business Management, 09(04), 809–820. https://doi.org/10.4236/ajibm.2019.94054

Jaff, T., & Ivanov, A. (2015). Manufacturing lead-time reduction and knowledge sharing in the manufacturing sector. Sustainable Design and Manufacturing, 618–629. http://www.inimpact.org

Journal, I., Vol, T., Tech, I. I. Y. M., & Area, I. (2013). Line Balancing Of Single Model. 2(5), 1678–1680.

Kassaneh, T. C., & Workalemahu, R. N. (2018). Performance Measurement and Improvement Method for Leather Footwear Industries. Journal of Engineering, Project, and Production Management, 8(2), 97–104. https://doi.org/10.32738/jeppm.201807.0005

Manaye, M. (2019). Line Balancing Techniques for Productivity Improvement. International Journal of Mechanical and Industrial Technology, 7(June), 89–104. https://www.researchgate.net/publication/333310098

Melkamu, M. (2021). Enhancing the Productivity of the Footwear Industry through Work Measurement and Line Balancing Techniques. (Case in Anbessa Shoe Share Company (ASSC)).

Moktadir, M. A., Mahmud, Y., Banaitis, A., Sarder, T., & Khan, M. R. (2021). Key performance indicators for adopting sustainability practices in footwear supply chains. E a M: Ekonomie a Management, 24(1), 197–213. https://doi.org/10.15240/TUL/001/2021-1-013

Muhammed Selman ERYILMAZa, Ali Osman KUŞAKCIb, H. Gavranovic., & AGraduate, and F. (2012). Analysis Of Shoe Manufacturing Factory By Simulation Of Production Processes. 1(1), 120–127.

Mulugeta, A. (2020). Production Performance Improvement by Simulation of a Footwear Manufacturing System in Tikur Abbay Shoe S.C. ChEg 5243, 4–5.

Mulugeta, N. (2011). Assembly line modeling and simulation of footwear manufacturing (A Case Study on Ramsey Shoe Factory). 137.

Munizzi, J. S. (2013). ASSEMBLY LINE BALANCING IMPROVEMENT: A CASE STUDY IN AN ELECTRONIC INDUSTRY. June.

Oqubay, A. (2015). Curing an Underperformer? Leather and Leather Products. In Made in Africa (Vol. 2011, Issue Fao 2011). https://doi.org/10.1093/acprof:oso/9780198739890.003.0006

Ragsdale, C. T., & Brown, E. C. (2004). On Modeling Line Balancing Problems in Spreadsheets. INFORMS Transactions on Education, 4(2), 45–48. https://doi.org/10.1287/ited.4.2.45

Raphael, B. (2022). Introduction to automation. In Construction and Building Automation. https://doi.org/10.1201/9781003165620-2

Sadeghi, P., António, J., Ferreira, S., Ana, P., Marques, M., & Gomes Viana, M. (2015). Balancing and lot-sizing mixed-model lines in the footwear industry-Master Dissertation.

Sci, J. C., Biol, S., Jilcha, K., Berhan, E., & Sherif, H. (2015). Workers and Machine Performance Modeling in Manufacturing System Using Arena Simulation. 8(4), 185–190. https://doi.org/10.4172/jcsb.1000187

Sheu, D. D., & Chen, J. Y. (2008). Line balance analyses for system assembly lines in an electronic plant. Production Planning and Control, 19(3), 256–264. https://doi.org/10.1080/09537280801966616

Shumon, R. H., Arif-uz-zaman, K., & Rahman, A. (2010). Productivity Improvement through Line Balancing in Apparel Industries. 100–110.

Sivasankaran, P., & Shahabudeen, P. M. (2016). Heuristics for Mixed Model Assembly Line Balancing Problem with Sequencing. Intelligent Information Management, 08(03), 41–65. https://doi.org/10.4236/iim.2016.83005

Performance Measurement and Improvement System in Meat Processing Industries (With Special Reference to Addis Ababa Abattoirs Enterprise). Addis Ababa University Addis Ababa Institute of Technology By : Hermela Solomon Performance Measurement and Improv, (2016) (testimony of Hermela Solomon).

Subramaniam, S. K., Husin, S. H., & Yusop, Y. (2008). Machine efficiency and man power utilization on production lines. 70–76.

Suparyanto dan Rosad (2015. (2020). Manufacturing systems modeling and analysis. In Suparyanto dan Rosad (2015 (Vol. 5, Issue 3).

Tangen, S. (2004). Evaluation and Revision of Performance Measurement Systems. In Royal Institute of Technology Stockholm.

Tesfaye, G. (2009). A Total Manufacturing Solutions Approach to Assess the Performance of Ethiopian Footwear Industry and Suggest Improvement Strategy A Total Manufacturing Solutions Approach to Assess the Performance of Ethiopian Footwear Industry and Suggest Improvement St. MSc Thesis in AAU ETHIOPIA.

Tiago, J., Covas, M., & Gomes, A. M. (2014). Simulation of Assembly Lines Balancing in the footwear industry Report of Preparation for the MSc Dissertation. February.

Tiago, J., Covas, M., Gomes, A. M., & Rebelo, R. (2014). FACULDADE DE ENGENHARIA DA UNIVERSIDADE DO PORTO Production Line Balancing Simulation: A case study in the Footwear Industry.

Yemane, A. (2017). Bottleneck Identification Using Time Study and Simulation Modeling of Apparel Industries. 321–331.

Yemane, A., Gebremicheal, G., Meraha, T., & Hailemicheal, M. (2020). Productivity improvement through line balancing by using simulation modeling (case study almeda garment factory). Journal of Optimization in Industrial Engineering, 13(1), 153–165. https://doi.org/10.22094/JOIE.2019.567816.1565

Appendix A:

Shoe type: WR-17-910					**Time study sheet**														
Shoe product type								**Shoe Model:** WR-17-9101											
Cutting stitching, lasting and finishing section					**Time study observer Bizuayehu Ayalew**														
Number of operations = 48					**Date: 15-25/02/2015 E.C**														
S.No	Sequence of operation	M/cs ,Tools & Equip ment	No. of M/cs	No. of worker	Observation time (OT) Seconds										Average time of OT	Performance rate (PR) 80%_ 110%	Normal time (NT) OT*PR	Allowance factor (AF) 15%	Standard time (STD) NT+AF
					T_1	T_2	T_3	T_4	T_5	T_6	T_7	T_8	T_9	T_{10}					
Cutting Department Operations																			
1	upper components cutting	M/C	1	1	131	135	135	130	134	130	135	13	130	134	133	90%	119	17.9	137
2	lining components cutting	M/C	1	1	144	140	138	138	142	142	140	13	138	142	140.	85%	119	17.8	137
3	reinforcement cutting	M/C	1	1	64	63	64	62	68	64	63	65	62	68	64.3	90%	57.8	8.68	66.5
4	sock cutting	M/C	1	1	30	26	29	29	28	29	26	28	29	28	28.2	80%	22.5	3.384	25.9
5	sock sponge cutting	M/C	1	1	27	24	24	24	23	26	24	23	24	23	24.2	85%	20	3.085	23.6
6	component counting and overall dispatch	Manual		1	66	68	70	75	69	66	68	71	75	69	69.7	80%	55	8.364	64.1
7	overall inspection	Manual		1	42	40	45	41	40	38	42	43	42	40	41.3	80%	33	4.956	37.9
_	Total	_	5	7	_	_	_	_	_	_	_	_	_	_	501	_	428	64.31	493
Stitching Department Operations																			
8	Lading component			1	27	25	23	28	26	26	25	24	28	26	25	90%	23.	3.483	26.70
9	Tongue, Quarter, Counter & Collar marking	Manual		2	100	95	84	92	88	90	95	85	92	88	90	80%	72	10.9	83.62
10	Collar, Quarter, Counter, Eye stay lining & Leather logo A skiving	skiving m/c	1	2	120	112	115	110	115	119	112	116	110	115	114	90%	102	15.4	118.4
11	Stamping	Stamp M/C	1	1	28	29	29	27	28	27	29	30	27	28	28	80%	22	3.384	25.944
12	Reinforcement Attachment	Manual		1	88	90	85	85	85	87	90	86	85	85	86	90%	77	11.69	89.631
13	Reinforcement Stitching	SNPB M/C	1	1	61	62	60	62	60	60	62	61	62	60	61	90%	54	8.235	63.135
14	Apron To Tongue Stitch	SNPB	1	1	44	42	40	45	40	43	42	41	45	40	42	80%	337	5.064	38.824

		M/C													2				
15	Apron To Wing Vamp Attachment	Manual		2	121	122	124	120	115	120	122	12	120	115	120	95%	114	17.15	131.537
16	Apron To Wing Vamp Stitching	SNPB M/C	1	2	128	125	124	126	124	127	125	12	126	124	125	95%	119	17.86	136.99
17	Vamp Stitching	SNPB M/C	1	1	185	182	177	185	186	184	182	178	185	186	183	80%	146	21.96	168.36
18	Quarter Stitching	SNPB M/C	1	2	93	94	87	90	86	92	94	88	90	86	90	95%	85	12.82	98.325
19	Face Folding	SNPB M/C	1	1	55	54	56	60	60	54	54	57	60	60	57	90%	51	7.695	58.995
20	Plaster Attachment	Manual		1	40	32	35	34	34	39	32	36	34	34	35	80%	28	4.2	32.2
21	Quarter To Counter Attachment	Manual		2	94	88	87	97	90	93	88	88	97	90	91	95%	86	12.99	99.636
22	Quarter To Counter Stitching	SNPB M/C	1	1	75	70	70	75	70	74	70	71	75	70	72	90%	64	9.72	74.52
23	Thread Cutting And Plaster Attachment	Manual		1	79	74	75	74	78	78	74	76	74	78	76	90%	68	10.26	78.66
24	Quarter Zing Zing Stitching	zigezag M/C	1	1	56	53	53	56	52	55	53	54	56	52	54	90%	48	7.29	55.89
25	Vamp To Quarter Attachment	Manual		2	91	88	89	95	92	90	88	90	95	92	91	95%	86	12.96	99.41
26	Vamp To Quarter Stitching	SNPB M/C	1	2	179	175	169	172	175	178	175	170	172	175	174	80%	139	20.88	160.08
27	Vamp Lining To Tongue Stitching	SNPB M/C	1	1	46	48	45	46	49	45	48	47	46	49	46	90%	42	6.33	48.54
28	Quarter Lining To Quarter Stitching	SNPB M/C	1	1	33	34	33	35	35	32	34	34	35	35	34	80%	27	4.08	31.28
29	Quarter Lining To counter Attachment	Manual		1	52	52	51	52	53	51	52	52	52	53	52	90%	46	7.02	53.82
30	Quarter Lining To Counter Stitching	SNPB M/C	1	1	78	75	73	74	70	77	75	74	74	70	74	90%	66.6	9.99	76.59
31	Vamp Lining To Quarter Attachment	Manual		1	83	80	82	77	78	82	80	83	77	78	80	90%	72	10.8	82.8
32	Vamp Lining To Quarter Stitching	Manual		1	67	67	64	63	64	66	67	65	63	64	65	90%	58	8.775	67.275
33	Thread Cutting And Plaster Attachment	Manual		1	73	78	75	80	74	72	78	76	80	74	76	90%	68	10.26	78.66
34	Toe Puff Attachment	Manual		1	43	40	37	42	38	42	40	38	42	38	40	80%	32	4.8	36.8
35	Quarter To Lining Stitching	SNPB	1	1	80	82	79	79	80	79	82	80	79	80	80	90%	72	10.8	82.8

		M/C																
36	Folding	SNPB M/C	1	1	25	24	24	26	26	24	24	25	26	26	25	80%	20	3	23
37	Hand Folding	Manual		1	68	64	64	65	64	67	64	65	65	64	65	90%	58.	8.775	67.2
38	Hammering	Equipment m/c	1	1	39	36	35	34	36	38	36	36	34	36	36	80%	28	4.32	33.12
39	Tongue To Lining Attachment	Manual		1	105	98	104	97	106	104	98	105	97	106	102	95%	96	14.53	111.435
40	Toe Puff Attachment	SNPB M/C	1	2	119	120	112	110	114	118	120	113	110	114	115	95%	109	16.38	125.63
41	Lining Trimming	SNPB M/C	1	1	61	62	59	62	61	60	62	60	62	61	61	90%	54	8.23	63.135
42	Punching To Make Hole	M/c	1	1	37	32	33	33	35	36	32	34	33	35	34	80%	27	4.08	31.28
43	Heel Counter Attachment	Manual		2	131	126	126	125	127	130	126	127	125	127	127	95%	120	18.09	138.74
44	Back Part Molding	Molding M/C	1	1	39	39	39	45	38	38	39	40	45	38	40	80%	32	4.8	36.8
45	Vamp Attachment	Manual		2	141	135	136	140	133	140	135	137	140	133	137	95%	130	19	149
46	Cleaning/ Quality Inspecting/	Manual		2	53	55	52	52	53	52	55	53	52	53	53	90%	47	7	54
47	Lacing For Temporary	Manual		1	71	68	59	65	62	70	68	60	65	62	65	90%	58	8	67
48	Sock Line To Sponge Attachment	Manual		1	79	82	75	86	78	78	82	76	86	78	80	90%	72	10	82
49	Sock Line To Sponge Stitching	SNPB M/C	1	2	95	104	87	104	100	94	104	88	104	100	98	95%	93	13	107
50	Final QC	Manual		1	15	17	16	18	17	16	15	18	17	15	16	100%	16	2.4	18
	Total		22	56											3220		2878	431	3310
Lasting Department Operations																		
51	last loading and insole	Manual		1	43	40	44	42	38	40	39	42	43	40	41.1	90%	36	5.5	42.5
52	last cleaning	Manual		1	25	27	26	26	25	29	26	27	28	25	26.4	90%	23	3	27
53	loading upper, toe cap steel	Manual		1	54	57	56	55	56	53	55	54	56	54	55	95%	52.25	7.8	60
54	roughing around center of out sole	Manual		1	35	38	37	35	34	35		37	36	34	32.1	80%	25	3	29
55	out sole cleaning	Roughing m/c	1	1	31	33	34	30	35	34	32	30	35	34	32.8	90%	29.52	4	33
56	attaching insole on last	Manual		1	29	20	29	30	29	29	30	30	31	30	28.7	80%	22.96	3	26
57	back part molding	M/C	1	1	46	47	45	43	45	45	46	46	47	45	45.5	90%	40.95	6.142	47.092

58	insert to steam insert	Back part molding m/c	1	1	20	24	17	18	24	26	25	28	21	27	23	90%	20.7	3.105	23.805
59	insert last and side closing	Manual		1	38	37	38		35	36	37	38	35	36	33	90%	29.7	4.455	34.155
60	apply glue on sides of the upper	Manual		1	35	37	36	35	37	35	37	35	36	37	36	90%	32.4	4.86	37.26
61	insert to steam	Manual		2	56	55	54	57	55	56	54	56	55	56	55.4	90%	49.86	7.479	57.339
62	creaming on upper and inserting in heat tunnel	Steam and heel seat lasting m/c	1	2	59	60	62	61	60	63	64	65	62	63	61.9	80%	49.52	7.428	56.948
63	Pounding	Manual			32	30	33	31	32	30	32	33	32	21	30.6	90%	27.54	4.131	31.671
64	in process quality inspection	Pounding m/c	1	1	35	36	37	35	36	37	36	36	37	36	36.1	80%	28.88	4.332	33.212
65	first level upper roughing	Manual		1	35	33	34	35	36	34	35	34	33	34	34.3	90%	30.87	4.630	35.500
66	second level upper roughing	Manual		1	36	35	37	38	37	36	35	37	35	35	36.1	80%	28.88	4.332	33.212
67	first adhesive coating on upper	Manual		1	62	64	60	63	65	63	61	63	63	64	62.8	95%	59.66	8.949	68.609
68	first adhesive coating on out sole	Manual		1	66	65	64	63	64	65	66	65	62	65	64.5	95%	61.275	9.1912	70.466
69	second adhesive coating on upper and sole	Manual		1	30	29	28	27	26	30	30	28	29	30	28.7	90%	25.83	3.8745	29.704
70	sole and upper dryer sole	Manual		1	30	28	29	28	27	25	29	27	28	27	27.8	90%	25.02	3.753	28.773
71	sole and upper re-activator	Dryer m/c	1	2	35	32	34	36	34	32	35	32	31	34	33.5	80%	26.8	4.02	30.82
72	attaching sole with upper	Re-activator m/c	1	1	45	46	47	43	42	45	46	45	43	46	44.8	90%	40.32	6.048	46.36
73	attaching sole with upper and pressing	Manual		2	85	88	84	87	85	83	83	82	85	84	76.1	80%	60.88	9.132	70.01
74	remove temporary shoe lacing	pressing m/c and chiller m/c	1	2	34	33	34	35	36	34	35	34	33	34	34.2	95%	32.49	4.87	37.3
75	de-lasting cleaning	Manual		1	15	15	15	16	14	13	14	15	16	15	14.8	95%	14.06	2.10	16
76	cleaning excess glue	De-lasting m/c	1	3	43	42	45	43	41	40	44	45	43	42	42.8	90%	38.52	5.7	44
			9	32											1038		915.3	137	1052
Finishing & Packing Department Operations																			

Observation time: WR 179101

Process time collected in seconds

Time Study Sheet									
Shoe Product Type					Shoe Model: Wr-17-9101				
Cutting Stitching, Lasting And Finishing Section					Time Study Observer: Bizuayehu Ayalew				
					Date: 15-25/02/2015 E.C				
S.No	Sequence Of Operation	M/Cs ,Tools & Equipment	No. Of M/Cs	No. Of Worker	Average Time Of Ot	Performance Rate (Pr) 80%_100%	Normal Time (Nt) Ot*Pr	Allowance Factor (Af) 15%	Standard Time (Std) Nt+Af
Cutting Department Operations No. Operation (Activity) = 7									
1	Upper Components Cutting	M/C	1	1	133	90%	119	17.9	137
2	Lining Components Cutting	M/C	1	1	140.3	85%	119	17.8	137
3	Reinforcement Cutting	M/C	1	1	64.3	90%	57.8	8.68	66.5
4	Sock Cutting	M/C	1	1	28.2	80%	22.5	3.384	25.9
5	Sock Sponge Cutting	M/C	1	1	24.2	85%	20	3.0855	23.6
6	Component Counting And Overall Dispatch	Manual		1	69.7	80%	55	8.364	64.1
7	Overall Inspection	Manual		1	41.3	80%	33	4.956	37.9
	Total	-	5	7	501	-	428	64.31	493
Stitching Department Operations No. Operation (Activity) =43									
8	Lading Component			1	25.8	90%	23.2	3.483	26.70
9	Tongue, Quarter, Counter & Collar Marking	Manual		2	90.9	80%	72.7	10.9	83.62

10	Collar, Quarter, Counter, Eye Stay Lining & Leather Logo A Skiving	Skiving M/C	1	2	114.4	90%	102	15.4	118.4
11	Stamping	Stamp M/C	1	1	28.2	80%	22.5	3.384	25.944
12	Reinforcement Attachment	Manual		1	86.6	90%	77.9	11.691	89.631
13	Reinforcement Stitching	Snpb M/C	1	1	61	90%	54.9	8.235	63.135
14	Apron To Tongue Stitch	Snpb M/C	1	1	42.2	80%	33.7	5.064	38.824
15	Apron To Wing Vamp Attachment	Manual		2	120.4	95%	114	17.157	131.537
16	Apron To Wing Vamp Stitching	Snpb M/C	1	2	125.4	95%	119	17.8695	136.99
17	Vamp Stitching	Snpb M/C	1	1	183	80%	146	21.96	168.36
18	Quarter Stitching	Snpb M/C	1	2	90	95%	85.5	12.825	98.325
19	Face Folding	Snpb M/C	1	1	57	90%	51.3	7.695	58.995
20	Plaster Attachment	Manual		1	35	80%	28	4.2	32.2
21	Quarter To Counter Attachment	Manual		2	91.2	95%	86.6	12.996	99.636
22	Quarter To Counter Stitching	Snpb M/C	1	1	72	90%	64.8	9.72	74.52
23	Thread Cutting And Plaster Attachment	Manual		1	76	90%	68.4	10.26	78.66
24	Quarter Zing Zing Stitching	Zigzag M/C	1	1	54	90%	48.6	7.29	55.89
25	Vamp To Quarter Attachment	Manual		2	91	95%	86.4	12.9675	99.41
26	Vamp To Quarter Stitching	Snpb M/C	1	2	174	80%	139	20.88	160.08
27	Vamp Lining To Tongue Stitching	Snpb M/C	1	1	46.9	90%	42.2	6.33	48.54
28	Quarter Lining To Quarter Stitching	Snpb M/C	1	1	34	80%	27	4.08	31.28
29	Quarter Lining To Counter Attachment	Manual		1	52	90%	46.8	7.02	53.82
30	Quarter Lining To Counter Stitching	Snpb M/C	1	1	74	90%	66.6	9.99	76.59
31	Vamp Lining To Quarter Attachment	Manual		1	80	90%	72	10.8	82.8
32	Vamp Lining To Quarter Stitching	Manual		1	65	90%	58.5	8.775	67.275
33	Thread Cutting And Plaster Attachment	Manual		1	76	90%	68.4	10.26	78.66

34	Toe Puff Attachment	Manual		1	40	80%	32	4.8	36.8
35	Quarter To Lining Stitching	Snpb M/C	1	1	80	90%	72	10.8	82.8
36	Folding	Snpb M/C	1	1	25	80%	20	3	23
37	Hand Folding	Manual		1	65	90%	58.5	8.775	67.2
38	Hammering	Equipment M/C	1	1	36	80%	28.8	4.32	33.12
39	Tongue To Lining Attachment	Manual		1	102	95%	96.9	14.535	111.435
40	Toe Puff Attachment	Snpb M/C	1	2	115	95%	109	16.38	125.63
41	Lining Trimming	Snpb M/C	1	1	61	90%	54.9	8.23	63.135
42	Punching To Make Hole	M/C	1	1	34	80%	27.2	4.08	31.28
43	Heel Counter Attachment	Manual		2	127	95%	120	18.09	138.74
44	Back Part Molding	Molding M/C	1	1	40	80%	32	4.8	36.8
45	Vamp Attachment	Manual		2	137	95%	130	19	149
46	Cleaning/ Quality Inspecting/	Manual		2	53	90%	47	7	54
47	Lacing For Temporary	Manual		1	65	90%	58	8	67
48	Sock Line To Sponge Attachment	Manual		1	80	90%	72	10	82
49	Sock Line To Sponge Stitching	Snpb M/C	1	2	98	95%	93	13	107
50	Final Qc	Manual		1	16.4	100%	16	2.4	18
	Total		22	56	3220	-	2878	431	3310
Lasting Department Operations No. Operation (Activity) = 26									
51	Last Loading And Insole	Manual		1	41.1	90%	36	5.5	42.5
52	Last Cleaning	Manual		1	26.4	90%	23	3	27
53	Loading Upper, Toe Cap Steel	Manual		1	55	95%	52.25	7.8	60
54	Roughing Around Center Of Out Sole	Manual		1	32.1	80%	25	3	29
55	Out Sole Cleaning	Roughing M/C	1	1	32.8	90%	29.52	4	33

56	Attaching Insole On Last	Manual		1	28.7	80%	22.96	3	26
57	Back Part Molding	M/C	1	1	45.5	90%	40.95	6.1425	47.092
58	Insert To Steam Insert	Back Part Molding M/C	1	1	23	90%	20.7	3.105	23.805
59	Insert Last And Side Closing	Manual		1	33	90%	29.7	4.455	34.155
60	Apply Glue On Sides Of The Upper	Manual		1	36	90%	32.4	4.86	37.26
61	Insert To Steam	Manual		2	55.4	90%	49.86	7.479	57.339
62	Creaming On Upper And Inserting In Heat Tunnel	Steam And Heel Seat Lasting M/C	1	2	61.9	80%	49.52	7.428	56.948
63	Pounding	Manual			30.6	90%	27.54	4.131	31.671
64	In Process Quality Inspection	Pounding M/C	1	1	36.1	80%	28.88	4.332	33.212
65	First Level Upper Roughing	Manual		1	34.3	90%	30.87	4.6305	35.500
66	Second Level Upper Roughing	Manual		1	36.1	80%	28.88	4.332	33.212
67	First Adhesive Coating On Upper	Manual		1	62.8	95%	59.66	8.949	68.609
68	First Adhesive Coating On Out Sole	Manual		1	64.5	95%	61.275	9.1912	70.466
69	Second Adhesive Coating On Upper And Sole	Manual		1	28.7	90%	25.83	3.8745	29.704
70	Sole And Upper Dryer Sole	Manual		1	27.8	90%	25.02	3.753	28.773
71	Sole And Upper Re-Activator	Dryer M/C	1	2	33.5	80%	26.8	4.02	30.82
72	Attaching Sole With Upper	Re-Activator M/C	1	1	44.8	90%	40.32	6.048	46.36
73	Attaching Sole With Upper And Pressing	Manual		2	76.1	80%	60.88	9.132	70.01
74	Remove Temporary Shoe Lacing	Pressing M/C And	1	2	34.2	95%	32.49	4.8735	37.36

		Chiller M/C							
75	De-Lasting Cleaning	Manual		1	14.8	95%	14.06	2.10	16
76	Cleaning Excess Glue	De-Lasting M/C	1	3	42.8	90%	38.52	5.7	44
			9	32	1038	-	915.3	137	1052
Finishing & Packing Department Operations No. Operation (Activity) = 10									
77	Ironing To Remove Wrinkle	Excess Glue Remover M/C	1	2	57.7	80%	46.16	6.92	53
78	Painting On Over Rough Place	Ironing M/C	1	2	15.3	90%	13.77	2.06	15
79	Apply Cream On Upper	Manual		1	18.8	80%	15.04	2.25	17
80	Apply Glue And Insert Sock Lining	Manual		1	17.4	90%	15.66	2.34	18.
81	Shoe Lacing	Manual		2	30.9	80%	24.72	3.70	28.4
82	Inserting Tissue Paper	Manual		3	26.1	95%	24.7	3.71	28.5
83	Final Brushing For Shine	Brushing M/C	1	2	14.8	95%	14.06	2.109	16.1
84	Final Quality Inspection	Manual		2	21.5	90%	19.35	2.90	22.2
85	Arrangement By Model	Manual		2	15.6	90%	14.04	2.10	16.1
86	Packed And Labeling	Manual		1	25.7	80%	20.56	3.08	23.6
Total			3	18	243	-	208	31	239
Overall Total			39	113	5003	-	4430	664	5095

Appendix B: Some of fitting input distribution through the input analyzer

Fit All Summary

Data File: C:\Users\ayalew\Desktop\T.txt 2.txt

Function Sq Error

Beta 0.047

Uniform 0.08

Weibull 0.123

Erlang 0.123

Gamma 0.123

Normal 0.131

Lognormal 0.132

Exponential 0.134

Triangular 0.138

Poisson 0.253

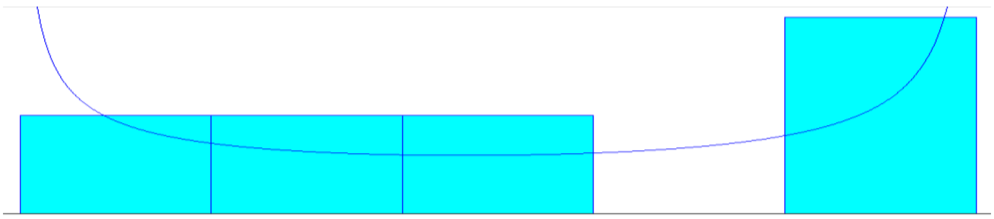

Distribution Summary

Distribution: Beta

Expression: 138 + 5 * BETA(0, 0)

Square Error: 0.046970

Data Summary

Number of Data Points = 5

Min Data Value = 138

Max Data Value = 142

Sample Mean = 140

Sample Std Dev = 1.79

Histogram Summary

Histogram Range = 138 to 143

Number of Intervals = 5

Fit All Summary

Data File: C:\Users\ayalew\Desktop\nn2.txt

Function Sq. Error

Beta 0.0892

Uniform 0.109

Normal 0.123

Poisson 0.127

Exponential 0.128

Erlang 0.128

Weibull 0.13

Gamma 0.133

Triangular 0.146

Lognormal 0.152

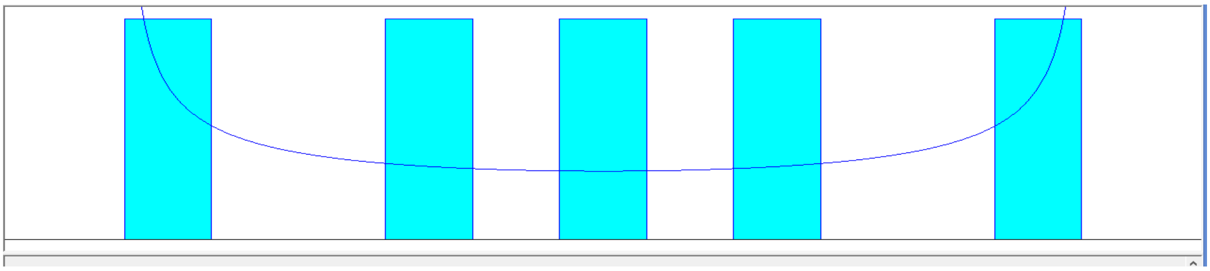

Distribution Summary

Distribution: Beta

Expression: 84.5 + 11 * BETA (0.543, 0.543)

Square Error: 0.089193

Data Summary

Number of Data Points = 5

Min Data Value = 85

Max Data Value = 95

Sample Mean = 90

Sample StdDev = 3.81

Histogram Summary

Histogram Range = 84.5 to 95.5

Number of Intervals = 1

APPENDIX C: Production report June 2021

	Departments	Cutting 1			Stitching line 1			Lasting line 1		
Date	Plan	Actual	WIP	No.of worker	Actual	WIP	No of worker	Actual	WIP	No. of worker
02/06/2021	250	241	9	20	245	5	46	210	40	28
03/06/2021	250	228	72	20	200	100	46	195	55	28
04/06/2021	250	250	0	20	240	40	46	230	70	28
05/06/2021	250	220	30	20	225	75	46	201	99	28
07/07/2021	250	250	0	20	215	85	46	240	60	28
08/06/2021	250	235	15	20	243	57	46	220	80	28

09/06/2021	250	246	34	20	246	54	46	200	100	28
10/06/2021	250	250	44	20	250	50	46	213	87	28
11/06/2021	250	209	91	20	201	99	46	198	102	28
12/06/2021	250	227	73	20	235	65	46	230	70	28
14/06/2021	250	220	80	20	210	90	46	215	85	28
15/06/2021	250	243	27	20	200	100	46	200	100	28
16/06/2021	250	200	100	20	225	75	46	208	92	28
17/06/2021	250	250	47	20	215	85	46	195	105	28
18/06/2021	250	237	63	20	200	100	46	200	100	28
19/06/2021	250	201	29	20	250	40	46	202	98	28
21/06/2021	250	207	23	20	230	70	46	219	81	28
22/06/2021	250	201	99	20	200	100	46	199	101	28
23/06/2021	250	245	25	20	220	80	46	230	70	28
24/06/2021	250	250	43	20	250	49	46	211	89	28
25/06/2021	250	234	66	20	210	90	46	200	100	28
26/06/2021	250	240	40	20	230	70	46	208	92	28
28/06/2021	250	250	10	20	200	100	46	200	100	28
29/06/2021	250	235	65	20	210	90	46	199	101	28
30/06/2021	250	250	44	20	195	105	46	220	80	28
Total	6250	5819	1239		5545	1924		5243	2257	
Average	480.76	447.6	95.3		426.5	148		403.30	173	

APPENDIX E: Input analyzer results for other shoe models

	Shoe models	C32021	G43901	AI2014
NO	Process name	Fit distribution	Fit distribution	Fit distribution
1	Upper component	EXPO(30)	EXPO(30)	NORM(30,0.9)
2	Lining component	NORM(25,0.8)	UNIF(20,25)	EXPO(35)
3	Heel counter cutting	UNIF(25,30)	EXPO(28)	EXPO(32)
4	Toe puff cutting	EXPO(15)	UNIF(20,25)	UNIF(20,28)
5	Reinforcement	NORM(30,1.5)	EXPO(30)	EXPO(25)
6	Stamping	EXPO(10)	EXPO(14)	EXPO(17)
7	Toe puff skiving	UNIF(10,15)	UNIF(10,15)	NORM(20,.89)
8	Heel counter skiving	EXPO(10)	EXPO(20)	EXPO(30)
9	Upper Skiving	NORM(15,0.9)	UNIF(20,25)	UNIF(20,25)
10	Lining skiving	EXPO(13)	EXPO(15)	UNIF(15,20)
11	Fixing of lining With upper	EXPO(25)	UNIF(25,30)	EXPO(35)
12	Upper Marking	TRIA(19,22,25)	TRIA(20,25,30)	NORM(20,1.20

13	Fixing face reinforcement	UNIF(28,32)	EXPO(25)	UNIF(25,30)
14	Stitch lining front part	UNIF(18,22)	NORM(20,1.5)	EXPO(25)
15	Stitch lining back part	UNIF(19,23)	EXPO(21)	UNIF(20,25)
16	Stitch tongue to lining	EXPO(15)	EXPO(20)	EXPO(23)
17	Top line stitching	UNIF(20,25)	EXPO(23)	UNIF(23,28)
18	Fix wing vamp to cup	EXPO(18)	NORM(20,1.5)	EXPO(20)
19	Stitch wing vamp to cup	NORM(25,0.89)	UINF(20,35)	EXPO(30)
20	Fixing sponge to tongue	EXPO(22)	EXPO(25)	TRIA(20,25,30)
21	Fixing Quarter to lining	UNIF(15,18)	TRIA(18,20,22)	UNIF(18,24)
22	Fixing sponge on sock	TRIA(16,18,22)	EXPO(30)	EXPO(20)
23	Stitch vamp to quarter	EXPO(20)	EXPO(25)	EXPO(25)
24	Fixing Toe puff to upper	UNIF(25,30)	UNIF(25,30)	UNIF(30,35)
25	Stitch tongue to upper	EXPO(13)	NORM(20,1.4)	EXPO(23)
26	Stitch lining upper throat	EXPO(19)	EXPO(23)	EXPO(25)
27	Fixing sponge on throat	NORM(15,1.2)	TRIA(18,20,24)	EXPO(20)
28	Folding upper stitched part	NORM(25,1.5)	EXPO(25)	UNIF(25,30)
29	Fixing lining to toe puff	EXPO(18)	NORM(20,1.4)	EXPO(20)
30	Fixing face to lining	TRIA(15,18,20)	EXPO(18)	NORM(20,1.5)
31	Stitch face with lining	EXPO(18)	EXPO(25)	UNIF(20,25)
32	Stitch quarter to lining	EXPO(15)	NORM(20,0.9)	EXPO(30)
33	Trimming excess lining	UNIF(18,22)	EXPO(25)	EXPO(22)
	Shoe models	C32021	G43901	AI2014
NO	Process name	Fit distribution	Fit distribution	Fit distribution
34	hole punching/eyeleting	NORM(22,0.78)	NORM(30,0.89)	UNIF(28,32)
36	Fixing tongue stitch vamp	EXPO(15)	UNIF(25,30)	EXPO(20)
36	Stitch tongue to vamp	UNIF(16,22)	TRIA(20,25,30)	UNIF(25,30)
37	Stitch sock lining to sponge	EXPO(15)	EXPO(25)	EXPO(28)
38	Lacing	TRIA(18,22,24)	UNIF(25,30)	UNIF(22,25,28)
39	Cleaning	EXPO(16)	NORM(20,1.1)	TRIA(16,18,22)
40	inspection	NORM(25,1.9)	UNIF(20,25)	NORM(25,0.9)
41	Sole cleaning	EXPO(25)	EXPO(35)	UNIF(25,30)
42	Insole tacking	UNIF(15,19)	UNIF(28,35)	EXPO(40)
43	Fixing Heel counter	UNIF(12,16)	TRIA(23,26,30)	NORM(25,0.98)
44	Back part molding	TRIA(10,12,14)	EXPO(24)	EXPO(15)
45	Fixing vamp to lining	EXPO(11)	NORM(19,0.89)	UNIF(20,28)
46	Stitching vamp to lining	NORM(15,1.80)	TRIA(25,30,35)	TRIA(23,28,30)
47	Back tacking inserting last	EXPO(13)	EXPO(17)	EXPO(30)
48	Toe & side lasting	EXPO(15)	UNIF(25,25,30)	UNIF(25,30)

49	Side gloving	EXPO(14)	EXPO(20)	EXPO(25)
50	Seat lasting	TRIA(12,14,16)	TRIA(20,25,30)	UNIF(30,40)
51	Tack removal	UNIF(10,15)	EXPO(20)	EXPO(24)
52	Wrinkle chasing ironing	NORM(30,0.89)	EXPO(35)	EXPO(32)
53	Rouging and scouring	NORM(18,1.2)	EXPO(30)	EXPO(19)
54	Upper gloving	EXPO(20)	EXPO(40)	UNIF(24,30)
55	Sole gloving	EXPO(20)	NORM(30,1.5)	EXPO(20)
56	Sole spotting & press	UNIF(25,30)	EXPO(27)	EXPO(32)
57	Cleaning	EXPO(18)	EXPO(25)	EXPO(23)
58	delasting	UNIF(20,25)	UNIF(20,25)	UNIF(20,25)
59	Sock inserting	UNIF(20,25)	EXPO(25)	EXPO(28)
60	Hot blower	TRIA(21,24,28)	TRIA(19,25,28)	TRIA(25,30,35)
61	Cream application	EXPO(17)	UNIF(20,25)	EXPO(25)
62	Brushing	NORM(18,1.5)	EXPO(17)	TRIA(20,25,29)
63	Lacing, paper inserting	EXPO(20)	EXPO(25)	EXPO(16)
64	Inspection	EXPO(20)	EXPO(19)	EXPO(25)
65	Packing	UNIF(25,30)	UNIF(30,35)	UNIF(25,30)

APPENDIX F: Work Element Assigned to Station

Workstation	Number of worker	Work element	Task Time (Sec)	Time per Station (Sec)
WS-1	2	1	105	210
		6	105	
WS-2	1	2	60	60
WS-3	3	3	25	112
		4	23	
		5	64	
WS-4	3	1	26.703	109.503
		4	82.8	
WS-5	4	2	100	125.944
		3	25.944	
WS-6	2	5	89.631	152.766
		6	63.135	
WS-7	1	7	38.824	38.824
WS-8	3	8	96.72	96.72
WS-9	2	9	65.016	65.016
WS-10	2	10	120	120
WS-11	2	11	98.325	98.325
WS-12	1	12	58.995	58.995
	3	13	32.2	131.836

WS-13		14	99.636	
WS-14	2	15	74.52	153.18
		16	78.66	
WS-15	3	17	55.89	155.3075
		18	99.4175	
WS-16	3	19	110.08	110.08
WS-17	1	20	48.645	48.645
WS-18	3	21	31.28	155.564
		22	53.82	
		23	70.464	
WS-19	2	24	82.8	150.075
		25	67.275	
WS-20	1	26	78.66	78.66
WS-21	3	27	36.8	136.8
		33	82.8	
WS-22	1	28	23	82.8
WS-23	1	29	67.275	23
WS-24	1	30	33.12	67.275
WS-25	1	31	95	33.12
WS-26	1	32	100	95
WS-27	1	34	63.135	63.135
WS-28	3	35	31.28	140.0275
		36	108.7475	
WS-29	1	37	36.8	36.8
WS-30	2	38	105.6725	105.6725
WS-31	2	39	54.855	54.855
WS-32	1	40	67.275	67.275
WS-33	3	41	82.8	148.8
		42	66	
Total	65	-	3,286.00	3,286.00
Total	59	-	3286.00	2,858.00
After balancing Bottle neck = 120 sec Number of work stations =33 Total time taken for one pair=3,286.00 sec 120*33=3,960 sec In min=3,960 sec/60=66 Min			The number of rotation per day 465/66= 7.04 rotation Therefore the produce 115*7.04 = 809.6 pairs/day but 809.6-77= 732.6 pairs/day Conveyor speed = 4000 cm/66 mm= 60.60 cm/min One worker can produce = 732.6/65= 11 pairs/day	

APPENDIX H Model runs cutting stitching and lasting results

5:49:15AM **Category Overview** March 22, 2023

Values Across All Replications

Unnamed Project

Replications: 5 Time Units: Minutes

Entity

Time

VA Time	Average	Half Width	Minimum Average	Maximum Average	Minimum Value	Maximum Value
Parts 1	21.7235	4.26	18.1883	25.7298	5.3028	49.9428
Parts 2	25.9194	6.14	20.0435	31.1153	7.3732	59.0412

NVA Time	Average	Half Width	Minimum Average	Maximum Average	Minimum Value	Maximum Value
Parts 1	0.00	0.00	0.00	0.00	0.00	0.00
Parts 2	0.00	0.00	0.00	0.00	0.00	0.00

Wait Time	Average	Half Width	Minimum Average	Maximum Average	Minimum Value	Maximum Value
Parts 1	43.7690	27.94	20.5841	71.2911	0.00	132.16
Parts 2	36.2550	23.42	19.4827	68.5372	1.3342	103.80

Transfer Time	Average	Half Width	Minimum Average	Maximum Average	Minimum Value	Maximum Value
Parts 1	0.00	0.00	0.00	0.00	0.00	0.00
Parts 2	0.00	0.00	0.00	0.00	0.00	0.00

Other Time	Average	Half Width	Minimum Average	Maximum Average	Minimum Value	Maximum Value
Parts 1	0.00	0.00	0.00	0.00	0.00	0.00
Parts 2	0.00	0.00	0.00	0.00	0.00	0.00

Total Time	Average	Half Width	Minimum Average	Maximum Average	Minimum Value	Maximum Value
Parts 1	65.4926	29.22	42.5588	97.0209	12.6126	150.70
Parts 2	62.1745	28.11	42.2603	99.65	17.8712	122.33

Cost

VA Cost	Average	Half Width	Minimum Average	Maximum Average	Minimum Value	Maximum Value
Parts 1	7.2978	1.05	6.6519	8.2401	1.7457	17.7390
Parts 2	8.3305	1.62	6.5984	9.6701	2.2745	17.2231

NVA Cost	Average	Half Width	Minimum Average	Maximum Average	Minimum Value	Maximum Value
Parts 1	0.00	0.00	0.00	0.00	0.00	0.00
Parts 2	0.00	0.00	0.00	0.00	0.00	0.00

5:49:15AM **Category Overview** March 22, 2023

Values Across All Replications

Unnamed Project

Replications: 5 Time Units: Minutes

Resource

Usage

Instantaneous Utilization	Average	Half Width	Minimum Average	Maximum Average	Minimum Value	Maximum Value
Assb Operator	0.8946	0.13	0.7811	1.0000	0.00	1.0000
Painter	0.7727	0.25	0.4801	0.9851	0.00	1.0000
Sub Operator	0.6352	0.15	0.4719	0.8110	0.00	1.0000

Number Busy	Average	Half Width	Minimum Average	Maximum Average	Minimum Value	Maximum Value
Assb Operator	0.8946	0.13	0.7811	1.0000	0.00	1.0000
Painter	0.7727	0.25	0.4801	0.9851	0.00	1.0000
Sub Operator	0.6352	0.15	0.4719	0.8110	0.00	1.0000

Number Scheduled	Average	Half Width	Minimum Average	Maximum Average	Minimum Value	Maximum Value
Assb Operator	1.0000	0.00	1.0000	1.0000	1.0000	1.0000
Painter	1.0000	0.00	1.0000	1.0000	1.0000	1.0000
Sub Operator	1.0000	0.00	1.0000	1.0000	1.0000	1.0000

Scheduled Utilization	Average	Half Width	Minimum Average	Maximum Average
Assb Operator	0.8946	0.13	0.7811	1.0000
Painter	0.7727	0.25	0.4801	0.9851
Sub Operator	0.6352	0.15	0.4719	0.8110

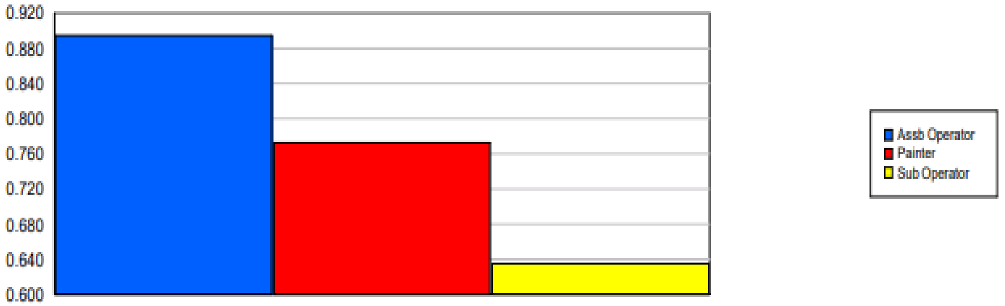

6:30:20AM **Category Overview** March 22, 2023

Values Across All Replications

Lasting Production Line

Replications: 5 Time Units: Seconds

Entity

Time

VA Time	Average	Half Width	Minimum Average	Maximum Average	Minimum Value	Maximum Value
WR17 9101	433.12	0.34	432.63	433.29	387.17	477.28
WR179101	425.61	0.41	425.24	426.08	368.39	485.54

NVA Time	Average	Half Width	Minimum Average	Maximum Average	Minimum Value	Maximum Value
WR17 9101	0.00	0.00	0.00	0.00	0.00	0.00
WR179101	0.00	0.00	0.00	0.00	0.00	0.00

Wait Time	Average	Half Width	Minimum Average	Maximum Average	Minimum Value	Maximum Value
WR17 9101	1810.07	464.50	1199.54	2091.98	3.7149	4277.02
WR179101	5144.87	235.27	4806.79	5252.91	0.00	10815.52

Transfer Time	Average	Half Width	Minimum Average	Maximum Average	Minimum Value	Maximum Value
WR17 9101	70.2425	0.44	69.7595	70.6246	59.5070	95.1802
WR179101	1215.00	0.00	1215.00	1215.00	1215.00	1215.00

Other Time	Average	Half Width	Minimum Average	Maximum Average	Minimum Value	Maximum Value
WR17 9101	0.00	0.00	0.00	0.00	0.00	0.00
WR179101	0.00	0.00	0.00	0.00	0.00	0.00

Total Time	Average	Half Width	Minimum Average	Maximum Average	Minimum Value	Maximum Value
WR17 9101	2313.43	464.80	1702.47	2595.78	496.34	4776.32
WR179101	6785.48	234.95	6447.87	6893.30	1608.39	12458.17

Other