ADDIS ABABA UNIVERSITY

ADDIS ABABA INSTITUTE OF TECHNOLOGY (AAIT)

SCHOOL OF ELECTRICAL AND COMPUTER ENGINEERING

DESIGN OF FRACTIONAL ORDER PID & NEURAL NETWORK CONTROLLER FOR MAGNETIC LEVITATION TRAIN SYSTEM

A Thesis Submitted to the School of Electrical and Computer Engineering of

Addis Ababa Institute of Technology Addis Ababa University

In partial fulfillment of the Requirement for the Degree of

Masters of Science in Control Engineering

By

Yibeletal Kassahun

Advisor:

Dereje Shiferaw (Ph.D.)

December, 2018

Addis Ababa, Ethiopia

Submitted By:

Yibeletal Kassahun	_____	_____
Student	**Signature**	**Date**

Approved By:

Dr. Dereje Shiferaw	_____	_____
Advisor	**Signature**	**Date**
_____	_____	_____
Internal Examiner	**Signature**	**Date**
_____	_____	_____
External Examiner	**Signature**	**Date**
_____	_____	_____
Chair or School Dean	**Signature**	**Date**
_____	_____	_____
Director of Postgraduate Program	**Signature**	**Date**

DECLARATION

I, the undersigned, declare that this thesis is my original work, and has not been presented for a degree in this or other universities, and all sources of materials used for this thesis work have been fully acknowledged.

Name: Yibeletal Kassahun

Signature: _____

Place: Addis Ababa Institute of Technology, Addis Ababa University, Addis Ababa Ethiopia

This thesis has been submitted for examination with my approval as a university advisor

Dereje Shiferaw (Ph.D.) _____

Advisor's Name Signature

ACKNOWLEDGEMENT

I would like to acknowledge my advisor, DEREJE SHIFERAW (Ph.D.) for his advice, support, argument and, his helpful supervision all over this thesis work.

ABSTRACT

Magnetic levitation systems are systems which operate based on the principle of magnetic attraction and repulsion to levitate an object and widely used in frictionless bearings, high-speed Maglev passenger trains, levitation of wind tunnel models, and so on. Their attracting feature is that they have a zero frictional force which considerably reduces the energy required to drive the systems. However, magnetic levitation systems are highly nonlinear and open loop unstable which makes their control very difficult. Moreover, magnetic levitation trains are more advantageous than conventional trains because train weight is lower due to the absence of wheels, axles, and engine, and hence can save huge energy consumption; the energy loss due to unwanted friction is negligible; it allows the train to move at a very high speed and to be environment friendly. This Thesis work investigates the control mechanism of Maglev systems based on linear unity feedback controller (PID and FOPID) with Taylor series linearization techniques and nonlinear controllers (ANN) based on nonlinear methods. To improve the closed loop performance of the PID controller more advanced $PI^{\lambda}D^{\delta}$ controller is used for the system. Stability is also ensured due to the additional tunable parameters λ (0.99811) and δ (0.99998) respectively. Then the proposed FOPID controller has resulted good performance i.e. the $PI^{\lambda}D^{\delta}$ controller improved a design performance specifications of settling time, overshoot, steady state error and peak response from (0.103 to 0.015 second), (18.452% to 4.37%), and (0.18 to 0.043) and (1.184 to 1.043) cm in Y direction. Lastly, for position control and stabilization of the Maglev train system, a powerful ANN controller is designed. Furthermore, a comparison between simulation results of the Conventional PID, fractional order PID, and NN controller is made to check the performance characteristics and stability of the Maglev train system. FOPID controller is more improved by ANN controller; performance characteristics of Maglev train obtained by ANN controller has resulted good. The neural network controller improved rise time, settling time, overshoot, steady state error and peak response from (0.009 to 0.0057 second), (0.015 to 0.0069 second), (4.37% to 0.864%), (0.043 to 0), and (1.043 to 1) cm in Y direction.

Keywords: Maglev Train, EDS, EMS, FOPID controller, Artificial Neural Network (ANN) controller.

TABLE OF CONTENTS

ACKNOWLEDGEMENT I

ABSTRACT II

TABLE OF CONTENTS III

LIST OF FIGURES V

LIST OF TABLES VI

LIST OF ABBREVIATIONS VII

CHAPTERONE 1.INTRODUCTION 1

1.1. GENERAL INTRODUCTION 1

1.1.1. LEVITATION 2

Electromagnetic suspension (EMS) 2

Electrodynamics' Suspension (EDS) 2

1.1.2. PROPULSION 3

1.1.3. GUIDANCE 4

1.2. LITERATURE REVIEW 5

1.3. STATEMENT OF THE PROBLEM 9

1.4. OBJECTIVES 9

1.4.1. GENERAL OBJECTIVES 9

1.4.2. SPECIFIC OBJECTIVES 9

1.5. METHODOLOGY 9

1.6. ORGANIZATION OF THE THESIS 10

CHAPTER TWO 11

2. MATHEMATICAL MODELING OF MAGNETIC LEVITATION SYSTEM 11

2.1. Mathematical Model for Electromagnetic subsystem 14

2.2. Mathematical Model for Mechanical Subsystem 14

2.3. Nonlinear Model 15

2.4. Linear Model Maglev 16

CHAPTER THREE 22

3. CONTROLLER DESIGN OF MAGLEV SYSTEM 22
3.1. PROPORTIONAL-DERIVATIVE COMPENSATED CONTROLLER FOR MAGLEV SYSTEM 22
3.2. PID CONTROLLER DESIGN FOR MAGLEV SYSTEM 25
3.3. BASIC CONCEPTS OF FRACTIONAL ORDER CALCULUS 26
3.3.1. FOPID Controller Design for Maglev System 27
3.4. NN CONTROLLER DESIGN FOR MAGLEV SYSTEM 29
CHAPTER FOUR 31
4. SIMULATIONS AND DISCUSSIONS 31
CHAPTER FIVE 50
5. CONCLUSION AND RECOMMENDATION 50
5.1. CONCLUSION 50
5.2. RECOMMENDATIONS 51
REFERENCES 52
APPENDICES 54
Appendix A: MATLABTM Code 54

LIST OF FIGURES

Figure 1.1: Maglev high speed train 1
Figure1. 2: EMS System 2
Figure 1.3: EDS Maglev Train 3
Figure 1.4: Maglev Propulsion 4
Figure 1.5: schematic diagram of EDS Maglev system 5
Figure 2.1: EDS Model [3] 13
Figure 2.2: Single axis magnetic suspension system[16] 14
Figure 2.3: Block Diagram representation of LTI Maglev System 20
Fig 2.4: Root locus of the uncompensated Maglev system 20
Figure 2.5: Response of Maglev system without controller 21
Figure3.1: Root locus of the compensated Maglev system 24
Figure 3.2: Step Response of the compensated Maglev system 24
Figure 3.3: Schematic diagram of controller with the Maglev plant 24
Figure 3.4: PID Control System with unity feedback 25
Figure3.5: PID plane 28
Figure 3.6: schematic diagram of Maglev plant with FOPID controller 29
Figure 3.7: Training a neural network controller 29
Figure 3.8: a multi–layer network with l layers of units 30
Figure 4.1: SIMULINK Diagram of Maglev Train control using PID and FOPID controller. 32
Figure 4.2: Closed loop unit step response of PID Controller for Maglev train system 33
Figure 4.3: FOMCON module relations [19] 35
Figure 4.10: Unit step response of FOPID Controller for Maglev train system 41
Figure 4.11: Step Response of PID and FOPID for Maglev Train 42
Figure 4.12: SIMULINK Diagram of Maglev Train control using NN Controller. 43
Figure 4.13: Validate and Test Data window 44
Figure 4.14: NN Training of Maglev system 45
Figure 4.15: NN Training performance 46
Figure 4.16: NN Training Error Histogram 47
Figure 4.17: NN Training Regression 47
Fig 4.18: Unit Step Response of PID and ANN Controller for Maglev Train 48

LIST OF TABLES

Table 2.1: Physical parameters of Magnetic Levitation train system

Table 4.1: The performance specifications of the Maglev train system controlled by PID controller parameters

Table 4.2: Using FOMCON Toolbox simulated in MATLAB the optimal values of $PI^{\lambda}D^{\delta}$ controller parameters

Table 4.3: The performance specifications of the Maglev train system controlled by optimal FOPID controller parameters

Table 4.4: Maglev Train performance characteristics using PID controller, FOPID controller and NN controller

LIST OF ABBREVIATIONS

AI	Artificial Intelligence
EDS	Electrodynamics' Suspension
Emf	Electromagnetic force
EMS	Electromagnetic Suspension
FOMC	Fractional–Order Modeling and Control
FOPID	Fractional order proportional integral derivative
FOTF	Fractional–Order Transfer Function
GUI	Graphical user interface
HST	High Speed Train
IMC	Internal model control
IO	Integer order
ISE	Integral Square Error
IT'S	Information Technology
LQR	Linear Quadratic Regulator
Maglev	Magnetic Levitation
MLP	Multilayer perceptron
NN (ANN)	Artificial neural network
PDC	Parallel Distributed Compensation
PID	proportional integral derivative
SMC	Sliding mode control

CHAPTERONE

1.INTRODUCTION

1.1. GENERAL INTRODUCTION

The dictionary definition of a train is a long line of vehicles traveling in the same direction. The principal of a Magnet train is that floats on a magnetic field and is propelled by linear induction motor. They follow guidance tracks with magnets. These trains are often referred to as Magnetically Levitated a train (Maglev high speed train) which is abbreviated to Maglev as shown in Figure1.1. Maglev trains (Magnetic levitation transport) use only magnetic force to levitation and propel vehicles without wheels, axles and bearings. With maglev, a vehicle is levitated a short distance away from a guide way using magnets to create both lift and propel[1].The very interesting maglev trains technology is that it can ease traffic congestion; helps reduce negative environmental impacts and can achieve high speeds with low friction compared to conventional wheel-rail trains.

Figure 1.1: Maglev high speed train

Generally, the three primary functions in maglev technology are levitation, propulsion, and guidance[1]. Magnetic forces perform all of these.

1.1.1. LEVITATION

Means train suspended above the guide way or in the air without touching the ground only using electromagnetic fields. There are two important type of levitation.

- Electromagnetic Suspension (EMS) and
- Electrodynamics' Suspension (EDS)

Electromagnetic suspension (EMS)

This system is arranged on a series of C-shaped arms. Upper part of the arm is attached to the vehicle (the train) and lower inside edge of the arm contains the electromagnet coil. The guide ways is placed inside the arm with another electromagnet coil is attached at the bottom of it. The two coils with opposite poles are facing each other and create an attractive force as shown in Figure 1.2. Then, the attractive force causes the train to be pushed upward and thus, levitate. The train is levitated about 1 to 2 cm above the guide way using attractive forces and inherently unstable.

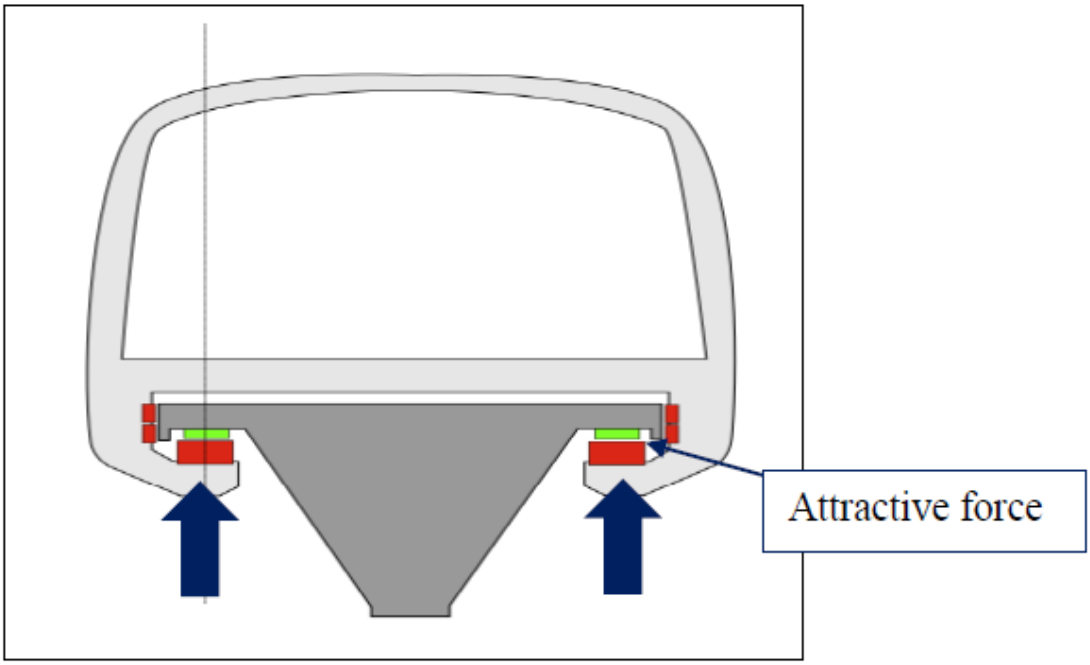

Figure1. 2: EMS System

Electrodynamics' Suspension (EDS)

In Electrodynamics' Suspension (EDS), both the train and guide way utilize a magnetic field, and the train is levitated by repulsive magnetic forces looking at Figure 1.3.The magnetic field

in the train is produced by superconducting magnet or electro magnet. In EDS System, The vehicle is levitated about 1 to 10 cm above the track using repulsive forces today commercially available Maglev train is based on EDS rather than EMS since, EDS is inherently stable. In this thesis EDS Maglev Train is considered.

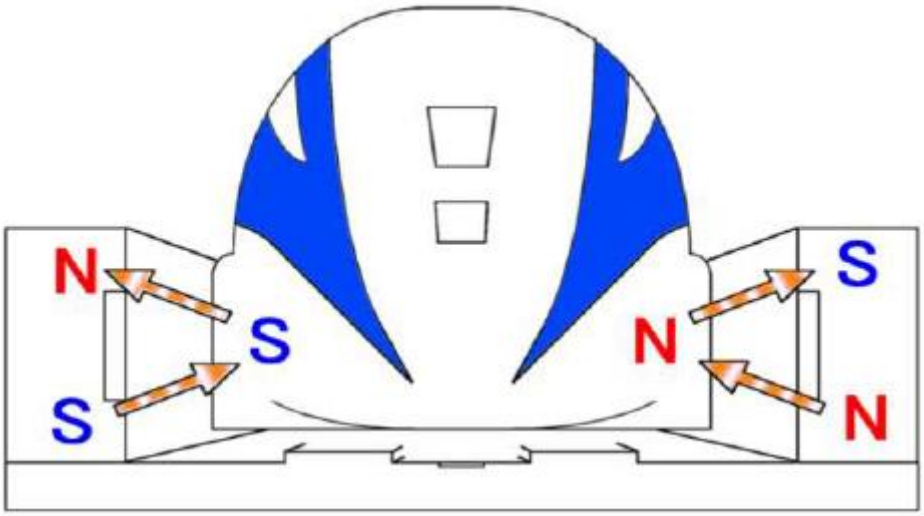

Figure 1.3: EDS Maglev Train

1.1.2. PROPULSION

Propulsion is the force that drives the train forward as shown in Figure1. 4. Maglev uses an electric linear motor to achieve propulsion. A normal motor will have a stator and a rotor. A stator is used to generate rotating magnetic field that induced rotating force on a rotor. As a result, the rotor will rotate. Likewise, linear motor is like an unrolled version of the normal motor. In this motor, instead of having a rotating magnetic field, the stator creates the magnetic field across its length. Therefore, the rotor will experience a linear force that is pulled across the stator making the rotor moves forward in straight line. The concept is applied to the Maglev train. In this case, the train is the rotor and the guide way is the stator. The guide way for Maglev Systems is made up of magnetized coils, for both levitation and propulsion. an alternating current is then produced, from the large power sources, and passes through the guide way, creating an electromagnetic field which repel the train to levitate between 1 to 10 cm above the guide way. The electric current supplied to the coils in the guide way walls is constantly alternating to change the polarity of the magnetized coils. This change in polarity causes the magnetic field in front of the train to pull the vehicle forward, while the magnetic field behind the train adds more forward thrust. The current through the guiderails is reversed causing the train to slow, and eventually to completely stop. Additionally, by reversing the

current, the train would go in the reverse direction. This propulsion system gives the train enough power to accelerate and decelerate fairly quickly, allowing the train to easily climb steep hills[1], [2].

.

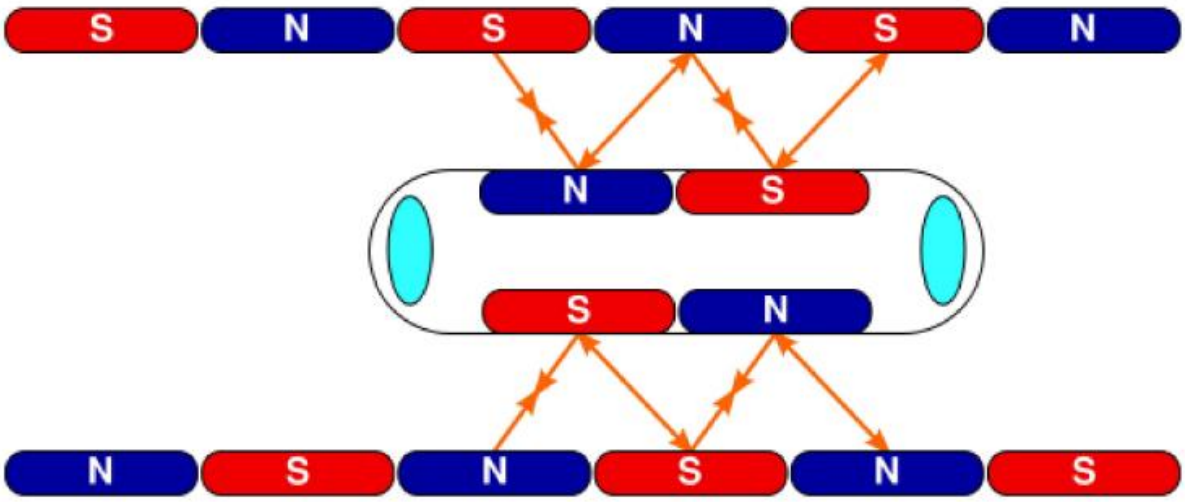

Figure 1.4: Maglev Propulsion

In figure 1.4, the train is pushed due to repulsion of poles and is pulled due to attraction of poles. So the train moves forward. Now the next set of pole comes into action and there by a continue motion is produced.

1.1.3. GUIDANCE

Guidance is important to keep the train to be centered over the guide way and prevent lateral displacement. Guidance system generally uses repulsive magnetic force to achieve the position intended. Emf is induced in the coils when the train is moving, the coils are connected and hence the emf on either side of the train are opposite in direction. Hence, they cancel out each other. Thus the train moves in the Center of the guide way. This thesis is based on EDS system then guidance is coupled in the levitation Looking at Figure1.5[1], [2].

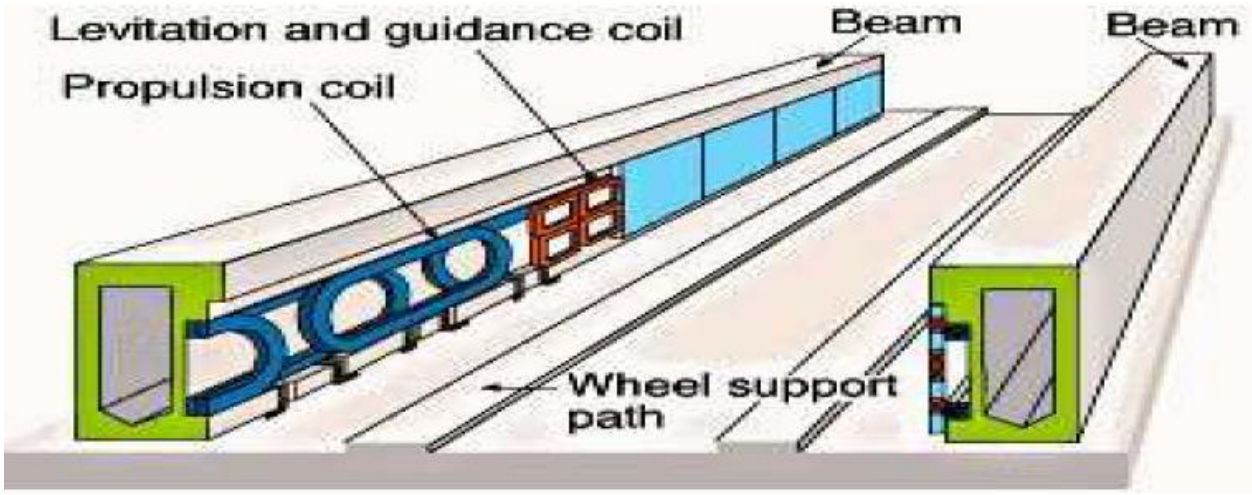

Figure 1.5: schematic diagram of EDS Maglev system

1.2. LITERATURE REVIEW

Magnetic levitation is a method by which an object is suspended in the air with no support other than magnetic fields. In recent years, a lot of works have been reported in the literature for controlling magnetic levitation systems; Magnetic levitation (Maglev) systems are widely used in various fields such as frictionless bearings, high-speed Maglev passenger trains, levitation of wind tunnel models, vibration isolation of sensitive machinery, levitation of molten metal in induction furnaces, and levitation of metal slabs during manufacture. The common point with all these applications is the lack of contact and thus the absence of wear and friction. That increases the effectiveness, reduces the maintenance costs and increases the useful lifetime of the system [2]. The magnetic levitation technology can be used as a highly advanced and efficient technology in the various industrial. There are already many countries that are attracted to maglev systems. In 1904, Robert Goddard, wrote a paper proposing a form of frictionless travel using electromagnetic repulsion roadbeds. Today this system is most popular in Japan, Germany, China and U.S.A., electrodynamics suspension system is frequently used in Japan. The Magnetic levitation (MAGLEV) technology was first tested in the 1970s, but it has never been in commercial operation on long-distance routes. The technology relies on electromagnetic forces to cause the vehicle to hover above the track and move forward at theoretically unlimited speeds. In practice, the aim is for an operation speed of 500 Kph (Taniguchi, 1993). In 2003, a MAGLEV test train achieved a world record speed of 581 kph (Takagi, 2005]. The special infrastructure required for MAGLEV trains means high construction costs and no compatibility with the railway network. The MAGLEV is mostly associated with countries like Japan and Germany where MAGLEV test lines are in operation.

In Japan, the test line will eventually be part of the Chuo Shinkansen between Tokyo and Osaka connecting the cities in about 1 hour compared with the present 2.5 hours. In China, a short MAGLEV line was opened in December 2003 connecting Shanghai Airport and the city's PUDONG financial district with trains running at maximum speed of 430 kph. However, plans to adopt MAGLEV technology for the planned Beijing–Shanghai route were abandoned in favor of a conventional steel wheel-on-steel rail HST. The future of the MAGLEV, it seems, depends on its success in Japan, in the same way the development of the HST depended largely on the success of the first SHINKANSEN line[3].

Among useful usages of magnetic levitation technologies, the most important usage is in operation of magnetically levitated trains. Magnetically levitated train is a highly modern vehicle, these vehicles move along magnetic fields that are established between the vehicle and its guide way; the idea is to make the train travels along a guide way using magnetic repulsion that creates lift and propulsion. Since there is no physical contact between the guide way and the train, friction forces are almost nonexistent and have no wheels, axles, and transmission. Therefore, it allows the train to move at a very high speed.

Maglev suspension systems are divided into two groups of Electromagnetic Suspension (EMS) and Electrodynamics' Suspension (EDS). The three primary functions in maglev technology are levitation, propulsion, and guidance. Magnetic forces perform all of these. Magnets are used to generate such magnetic forces. For EMS systems, these magnets are located within the vehicle while for EDS systems magnets are located on the train. Performance of EMS system is based on attractive magnetic forces, while ED's system works with repulsive magnetic forces. In EDS System, the vehicle is levitated about 1 to 10 cm above the track using repulsive forces and In EMS system, the vehicle is levitated about 1 to 2 cm above the guide way using attractive forces. Today commercially available Maglev train is based on EDS rather than EMS since, EDS is inherently stable while EMS is inherently unstable.

Electrodynamics Suspension (EDS)

In Electrodynamics' Suspension (EDS), both the train and guide way utilize a magnetic field, and the train is levitated by repulsive force. The magnetic field in the train is produced by permanent magnet or electro magnet. Due to its less cost, higher efficiency and high ability to resist demagnetization permanent magnet is more preferable. Super conducting Maglev are also called linear motor, the motor is linear not rotary it exerts a kinetic force in straight line or guide way. One part of the linear motor is mounted on the train and on the guide way; train has

light but powerful superconducting magnets and guide way has energized coils along the side .thus train does not carry equipment such as transformers and inverters . As a result, it is very light, slim and no wheels or rail linkage problems Magnetic levitation train is highly advanced since less maintenance cost, environmental disruption and high speed. At this time Japan Maglev train to travel extremely fast and it is based on EDS System. It uses magnets that have same polarity to create repulsive force between levitation magnet and guide way magnet. This repulsive force then will be high enough to overcome gravitational force and allows it to levitate. The main difference between ED's maglev train and EMS maglev train is that ED's maglev train use super-cooled, superconducting electromagnets. This superconducting electromagnet can conduct electricity even after the power supply has been shut off for example in the event of a blackout. In the EMS system, which uses standard electromagnets, the coils only conduct electricity when a power supply is present. By chilling the coil at frigid temperatures, Japan's EDS system saves energy. However, the cryogenic system uses to cool the coils can be expensive. In recent years; a lot of works have been reported in the literature for controlling magnetic levitation systems.

Adrian-VASILE DUKA, et al.'' IMC based PID Control of a Magnetic Levitation System'' [4].In this paper a linear model that represents the nonlinear dynamics of the magnetic levitation system is first derived. Then, this model is used in the design procedure of an IMC-based PID controller, which is used for achieving stable levitation of a ferromagnetic object at predetermined distances with the help of the magnetic field produced by a coil.

SANTOSH KR. CHOUDHARY, ''Robust Feedback Control Analysis of Magnetic Levitation System'' [5].In this paper, H∞ robust control is investigated to bring the magnetic levitation system in a stable region by keeping a magnetic ball suspended in the air in the presence of uncertainties. The paper first presents the complete non-linear and linear mathematical models and then it adopts the mixed sensitivity design method for H∞ controller synthesis.

Engr. SADAQAT UR REHMAN,et al. "Linear Quadratic Regulator controller for Magnetic Levitation System"[6].This paper explains Magnetic Levitation system of a train which comprises of guidance track made with magnets. The main objective is to design a proper controller that can suspend and propelled the train on a guidance track made with magnets. To perform the desired task state space model of Magnetic Levitation system is derived. The open loop response showed that the derived model is unstable. Linear Quadratic Regulator (LQR) controller is designed to analyze the system in closed loop. The controller showed improved performance for different tracks.

MILAD GHOLAMI, et al. “Design & Implementation of Fuzzy Parallel Distributed Compensation Controller for Magnetic Levitation System”[7].In this paper, the intelligent Fuzzy controller for the Magnetic Levitation system has been designed implemented. This approach has been developed based on Takagi Sugeno Fuzzy model and Fuzzy parallel distributed system. Designing this technique is to change a nonlinear system into a series of linear subsystems. Each linear subsystem will be controlled independently and separate sub controllers will be included in a Fuzzy function basis. The Fuzzy function basis under the control of the linear controllers applies to the system a controlling signal relevant to the current system condition based on linear modeling. Results show that a PDC controller has shorter settling time than other controllers and it has less Maximum signal control competed with other controllers.

ISHTIAQ AHMAD and MUHAMMAD AKRAM JAVAID,” Nonlinear Model & Controller Design for Magnetic Levitation System”[8].This paper aims at development of nonlinear dynamic model for Magnetic Levitation System and proposed linear and nonlinear state space controllers. The linear controller was designed by linear zing the model around equilibrium point, while nonlinear controller was based on feedback linearization where a nonlinear state-space transformation is used to linearize the system exactly. Magnetic Levitation system considered in this study is taken as a ferromagnetic ball suspended in a voltage controlled magnetic field. Dynamic behavior of the system was modeled by the study of electromagnetic and mechanical subsystems. State space model was derived from the system equations. Linear full state controller along with linear observer was designed and was compared with nonlinear full state feedback with nonlinear observer.

CHING-YUTYAN and Paul P. Wang “An Application on Intelligent Control Using Neural Network and Fuzzy Logic”[9]. In this paper, a completed feasibility study of process fault diagnosis control for a complex magnetic levitation vehicle intelligent control system using neural network and fuzzy logic is presented. System performance was determined by a state-feedback controller and observed state measurement data in the steady-state were obtained via state estimator. The learning, training, and classification of system fault symptoms were carried out through an artificial neural network and malfunction of the process was eliminated via fuzzy fault control system. It has been shown that a neural network classier accomplishes a satisfactory classification accuracy in both disturbance free and track disturbance irregularity cases and fuzzy fault control recovers the ill process operation back to normal. It is also important to note that the purpose of this paper is to demonstrate the concept of a “diagnostic

doctor" for the dynamic systems. However, the dynamic system studied in this paper is a linear and time-invariant system.

1.3. STATEMENT OF THE PROBLEM

Maglev systems are open loop unstable, so designing a liner feedback controller and nonlinear controllers to determine the exact position of a Magnetic levitation system. Nonlinear controllers based on nonlinear methods while liner feedback controller is PID controller. PID controller is used to stabilize the system with acceptable small error; to improve performance a fractional order PID controller would be studied.

1.4. OBJECTIVES

1.4.1. GENERAL OBJECTIVES

The core objective of this thesis is improving performance of magnetic levitation train systems. As a part of the thesis work the overall system is simulated using MATLAB and other simulation software tool.

1.4.2. SPECIFIC OBJECTIVES

- To Mathematical model will be done to investigate magnetic levitation system.
- To Design Fractional order PID controller for determining the exact position of the magnetic levitation system.
- To Design a Neural Network controller that will be used for position control of magnetic levitation system.
- To compare the performance of result of both controllers from the simulation.

1.5. METHODOLOGY

The methodology of this thesis is engaged to carry out the analysis start with reviewing of literature, which includes reading of books, publication papers and thesis works to get essential information and ideas that will assist me to focus my work. The central part of the paper undertaking is mathematical modeling, linearization at the equilibrium point and finding open-loop transfer function based on physical parameters of Maglev train. Then a difficulty problem arising from here is unstable pole which is located in The right half ‘s‘ plane so to stabilize the system proportional derivative compensator is used, but system performance is impossible since having significant overshoot, settling time and steady state value. Therefore, conventional

PID and $PI^{\lambda}D^{\delta}$ controller is designed for controlling Maglev train system and performance analysis and interpretations is done with simulation results; when compared both controllers a good performance is observed in fractional order PID controller.

A controller design is based on using MATLAB Graphical user interface. At the end ANN controller is designed to improve system performance significantly, its sampled data is collected from the input and output of FOPID controller for training purpose. Back propagation learning algorithm (Levenberg - Marquardt) is used to train the network. Hence, in this paper the conventional PID, FOPID and ANN controller simulation results will be compared using time domain specifications for instance overshoot, settling time, rise time and steady state values.

1.6. ORGANIZATION OF THE THESIS

The thesis is organized in to five parts:

Chapter one: briefly discusses about main functions of Maglev Train system, literature review of pervious works, objective and methodology of the work is introduced.

Chapter two: deals mathematical modeling of Maglev Train system and linearize a nonlinear model by using Taylor's series linearization method and response of systems without controller.

Chapter three: describe controllers' design of Maglev Train system.

Chapter four: in this chapter the controller designed is simulated using MATLAB and results are discussed briefly.

Chapter five: in this chapter conclusion and recommendation are discussed.

CHAPTER TWO

2. MATHEMATICAL MODELING OF MAGNETIC LEVITATION SYSTEM

A mathematical model of a dynamic system is defined as a set of equations that represents the dynamics of the system accurately or, at least fairly well. A mathematical model is not unique to a given system. The dynamics of many systems may be described in terms of differential equations. Such differential equations may be possibly obtained by using physical laws governing a particular system. Once a mathematical model of a system is obtained, various analytical and computer tools can be used for analysis and synthesis purposes[10].

Magnetically levitated train system is non-linear and unstable. To control the limitations different researchers, investigate feedback controller based on Taylor series linearization techniques and nonlinear controllers based on nonlinear methods. A system that is not linear is called a nonlinear system. All physical systems are nonlinear so many researchers and designers' study nonlinear control system. The Taylor series linearization technique has been used to design control laws for magnetic levitation systems, Taylor series linearization method is used to approximate the nonlinear system by a linear one at nominal operating points; this is used to determine the behavior of the nonlinear system by studying the linear equivalent. In this thesis, I will design a liner feedback PID controller. PID controllers are widely being used in industries for process control applications. This is mainly because PID controllers have simplicity of design and good performances including low percentage overshoot and small settling time, PID controller adjusted parameters are k_p, k_i and k_d, by adjusting these parameters optimize performance will reach. However, a conventional PID controller may have poor control performance for nonlinear and/or complex systems. Since the PID gains are fixed, the main disadvantage is that they usually lack in flexibility and capability.

To improve performance of PID controller a fractional order PID (FOPID) controller is introduce and have additional two parameters the power of 's' in integral and derivative actions- λ and δ. The orders of integration and differentiation are respectively λ and δ (both positive real numbers, not necessarily integers). Taking $\lambda = 1$ and $\delta = 1$, we will have an integer order PID controller. So we see that the integer order PID controller has three parameters, while the fractional order PID controller has five parameters and the values of λ and δ lies between 0 and 1. The fractional order PID controller generalizes the integer order PID controller and

expands it from point to plane. This expansion adds more flexibility to controller design and we can control our real-world processes more accurately.

Other kinds of nonlinear controllers based on nonlinear methods used to control magnetic levitation system are control laws based on phase space, neural network techniques, sliding mode control (SMC), Fuzzy Parallel Distributed Compensation controller etc. The paper is highly focused NN controller to improve performance of Maglev system; NN controller is nonlinear controllers based on nonlinear methods.

Artificial Intelligence (AI) is a byproduct of the Information Technology (IT) revolution, and is an attempt to replace human intelligence with machine intelligence. An intelligent control system combines the techniques from the fields of AI with those of control engineering to design autonomous systems that can sense, reason, and plan, learn and act in an intelligent manner. There is a close analogy between the structure of a biological neuron (i.e., a brain or nerve cell) and the processing element (artificial neuron). The human brain is comprised of many millions of interconnected units, known individually as biological neurons. Each neuron consists of a cell to which is attached several dendrites (inputs) and a single axon (output). The axon connects too many other neurons via connection points called synapses. Synapses produce a chemical reaction in response to an input. The biological neuron fires if the sum of the synaptic reactions is sufficiently large. The brain is a complex network of sensory and motor neurons that provide a human being with the capacity to remember, think, learn and reason; ANN's attempt to emulate their biological counter parts. McCulloch and Pits (1943) proposed a simple model of a neuron, and Hebb (1949) described a technique which became known as 'HEBBIAN' learning. Rosenblatt (1961), devised a single layer of neurons, called a Perceptron, which was used for optical pattern recognition. One of the first applications of technology for control purposes was by WIDROW and Smith (1964). They developed an Adaptive Linear Element (ADLINE) that was taught to stabilize and control an inverted pendulum. KOHONEN (1988) and Anderson (1972) investigated similar areas, looking into associative and interactive memory, and also competitive learning. The back propagation training algorithm was studied by WERBOS (1974) and further developed by RUMELHART (1986) and others, leading to the concept of the Multilayer Perceptron (MLP)[11]–[13].

Artificial neural network is an interconnection of simple processing units which communicate by sending signals and massively parallel. In Artificial neural network Learning is achieved by updating the interconnection weights between processing units; artificial neural network has advantages for intelligent control such as learn from experience rather than by programming,

have the ability to generalize from given training data to un seen data, fast and implemented in real life and fail ‘gracefully’ rather than ‘catastrophically’. In this thesis I use a type of neural network topologies which is called the Feed forward i.e. means connection extends from input to output without any feedback and Used for mapping or function approximation[12]–[14]. Neural Network controller is designed for stabilization of Magnetic Levitation system to the desired point in the state space[14]. The focus area of this thesis work is to improve performance of magnetic levitation systems based on FOPID and Neural Network controller.

The dynamic behavior maglev system can be modeled by the study of electromagnetic and mechanical sub systems[15], [16]. The system has one equilibrium state at which the magnetic force exactly counterbalance and identical with force due to gravity. Equilibrium is a challenging problem which is not stable, then first linearized the system around the equilibrium point and the linearized system having unstable pole in the right-half of s-plane. Therefore a controller is introduced to stabilize unstable pole.

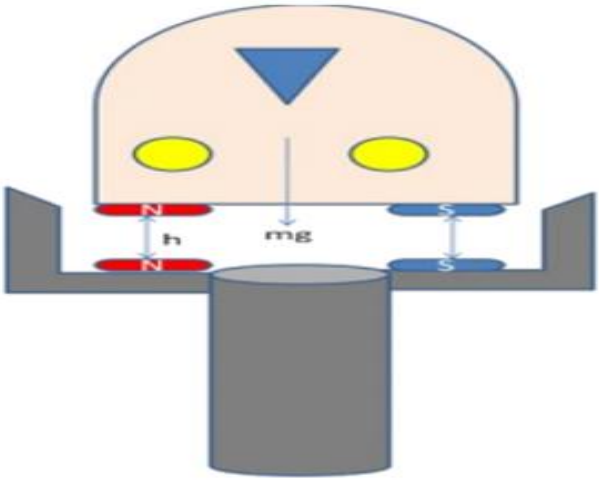

Figure 2.1: EDS Model [3]

Mg is the train weight (including the electromagnets) and h is the vertical gap between the guide way and the train.

2.1. Mathematical Model for Electromagnetic subsystem

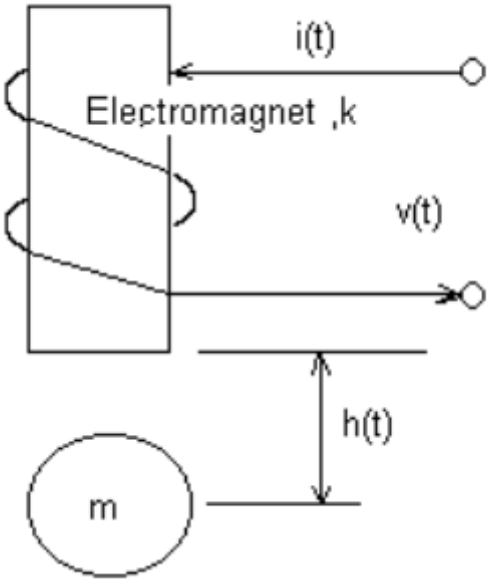

Figure 2.2: Single axis magnetic suspension system[16]

Fig. 2.2 shows a single axis magnetic levitation system is used, as well as electromagnetic and mechanical equations.

Apply Kirchhoff's voltage equation for the electric circuit

$$V = V_R + V_L \Rightarrow u\,(t) = iR + L\frac{di}{dt} \tag{2.1}$$

Where u, I, Rand L is applied voltage input, current in the electromagnet coil, coil's resistance and coil's inductance respectively.

2.2. Mathematical Model for Mechanical Subsystem

Energy stored in the inductor can be written as

$$We = \frac{1}{2}Li^2 \tag{2.2}$$

Since power in electrical system (P_e) = Power in the mechanical system (P_m), where $P_e = \frac{dWe}{dt}$and $P_m = -f_m\frac{dx}{dt}$therefore

$$-f_m\frac{dx}{dt} = \frac{dWe}{dt}$$

$$\Rightarrow f_m = -\frac{dWe}{dt}\frac{dt}{dx} = -\frac{dWe}{dx} \tag{2.3}$$

Where f_m is known as electromagnet force Now substituting (2.2) in the equation (2.3),

$$\left.\begin{aligned} f_m &= -\frac{d}{dx}\left(\frac{1}{2}Li^2\right) \\ &= -\frac{1}{2}i^2\frac{d}{dx}\,(L) \end{aligned}\right\} \tag{2.4}$$

Since the inductance L is a nonlinear function of train position (x) we shall neglect the leakage flux and eddy current effects (for simplicity), so that the inductance varies with the inverse of train position as follows:

$$L = \frac{k}{x} \qquad \text{Where in, } k = \mu 0 N^2\,A/2 \tag{2.5}$$

Where, μ0 is the inductance constant, A is the pole area, N is the number of coil turns and k is electromagnet force constant.

$$\left.\begin{aligned} f_m &= -\frac{1}{2}i^2\,\frac{d}{dx}\left(\frac{k}{x}\right) \\ &= -\frac{1}{2}i^2\,(-k/x^2) \\ \therefore f_m &= \frac{k}{2}(i^2/x^2) \end{aligned}\right\} \tag{2.6}$$

If f_m is electromagnetic force produced by input current, f_g is the force due to gravity and f is net force acting on the train, the equation of force can be written as

$$\left.\begin{aligned} f_g &= f_m + f \\ &= f_m + m\,(d^2x/dt^2) \\ \Rightarrow m\frac{dv}{dt} &= f_g - f_m = mg - \frac{k}{2}\,(i(t)/x(t))\,2 \end{aligned}\right\} \tag{2.7}$$

Where $m =$ train mass and $v = \frac{dx}{dt} = \frac{dh}{dt}$, which is velocity of the train movement.

At equilibrium the force due to gravity and the magnetic force are equal and oppose each other so that the train levitates. i.e. $f_g = -f_m$ and $f = 0$

2.3. Nonlinear Model

On the basis of electro-mechanical modeling, the nonlinear model of magnetic levitation system can be described as follows:

The general form of an affine system

$$\frac{dx}{dt} = f(x) + g(x).u \tag{2.8}$$

Is obtained by denoting variables for state space representation as follows

$$\left.\begin{aligned} x_1 &= h = x \\ x_2 &= dh/dt = v \\ x_3 &= i \end{aligned}\right\} \tag{2.9}$$

Substitute equation (2.9) or the state variables in to equation (2.1) and (2.7)

$$\left.\begin{aligned} u(t) &= x_3.R + L.\dot{x}_3 \\ m.\dot{x}_2 &= m.g - \frac{k}{2}(x_3/x_1)^2 \end{aligned}\right\} \tag{2.10}$$

Then the nonlinear state space model is

$$\left.\begin{aligned} \dot{x}_1 &= x_2 \\ \dot{x}_2 &= g - \frac{k}{2m}(x_3/x_1)^2 \\ \dot{x}_3 &= \frac{u}{L} - x_3.R/L \end{aligned}\right\} \tag{2.11}$$

Nonlinear model in matrix form is given by

$$\begin{bmatrix} \dot{x}_1 \\ \dot{x}_2 \\ \dot{x}_3 \end{bmatrix} = \begin{bmatrix} x_2 \\ \left(g - \frac{k}{2m}\right)\left(\frac{x_3}{x_1}\right)^2 \\ \left(-\frac{R}{L}\right).x_3 \end{bmatrix} + \begin{bmatrix} 0 \\ 0 \\ 1/L \end{bmatrix} u \tag{2.12}$$

2.4. Linear Model Maglev

To carry out controller design and analysis of maglev system, the obtained non-linear model has to be linearized since to perform a simulation and stability analysis. Linear models are easier to understand (than nonlinear models) and are necessary for most control system design methods. There are different linearization's techniques are used to linearize the nonlinear model; in this thesis I focused Taylor's series linearization and it is done in the equilibrium point (Equilibrium points are solutions of the differential equation) which can be calculated from:

$f_g = -f_m\,(x_1, x_3) \Longrightarrow x_{10}, x_{30}$

The states of the system arex_3, x_2 andx_1. At equilibrium, the force due to gravity f_g and the magnetic force f_m are equal and oppose each other so that the train levitates. Considering nominal coil input voltage (control parameters) produces the corresponding coil current x_{30} such that the train reaches at its equilibrium where position $x_1 = x_{10}$we can linearzed the

model using Taylor's series expansion of $f_m\,(x_{10}, x_{30})$ around the equilibrium point (x_{10}, x_{30}), where $x_{10} = x_{10} + \Delta x_{10}$ and $x_{30} = x_{30} + \Delta x_{30}$

$$f_m\,(x_{10}, x_{30}) \cong f_m\,(x_{10}, x_{30}) + ((\partial f_m/\partial x_{10}) \mid (x_{10}, x_{30}))\,\Delta x_{10} + ((\partial f_m/\partial x_{10}) \mid (x_{10}, x_{30}))\,\Delta x_{30} + \text{H.O.T.} \tag{2.13}$$

For small Δx_{10} and Δx_{30} the H.O.T. ≈ 0

$$f_m\,(x_{10}, x_{30}) \cong f_{m0} + (\tfrac{k}{2}\partial/\partial x_{10}\,(x_3/x_1)^2 \mid (x_{10}, x_{30}))\,\Delta x_{10} + (\tfrac{k}{2}\partial/x_{10}(x_3/x_1)^2 \mid (x_{10}, x_{30}))\,\Delta x_{30} + 0$$

$$f_m\,(x_{10}, x_{30}) \cong f_{m0} - k x_1 (x_3^2/x_1^4 \mid (x_{10}, x_{30}))\,\Delta x_1 + k x_3/x_1^2 \mid (x_{10}, x_{30}))\,\Delta x_3$$

$(x_1, x_3) \cong f_{m0} + x_{30}^2/x_{10}^3\,(-k\Delta x_1) + (k x_{30}/x_{10}^2)\Delta x_3$, let $n = k(x_{30}^2/x_{10}^3)$ and $p = k(x_{30}/x_{10}^2)$

$$\therefore f_m\,(x_1, x_3) \cong f_{m0} - n\Delta x_1 + p\Delta x_3 \tag{2.14}$$

Now governing equations for linear maglev model can be written as:

$$\left.\begin{aligned} &\dot{x}_1 = x_2 \\ &m\dot{x}_2 - n\Delta x_1 + p\Delta x_3 = 0 \\ &L\dot{x}_3 + R x_3 = u \end{aligned}\right\} \tag{2.15}$$

Using equations (2.15) we can formulate the state space model of maglev system as:

$$\left.\begin{aligned} &\begin{bmatrix} \Delta\dot{x}_1 \\ \Delta\dot{x}_2 \\ \Delta\dot{x}_3 \end{bmatrix} = \begin{bmatrix} 0 & 1 & 0 \\ \frac{n}{m} & 0 & -\frac{p}{m} \\ 0 & 0 & -\frac{R}{L} \end{bmatrix} \begin{bmatrix} \Delta x_1 \\ \Delta x_2 \\ \Delta x_3 \end{bmatrix} + \begin{bmatrix} 0 \\ 0 \\ 1/L \end{bmatrix} u \\ &y = \begin{bmatrix} 1 & 0 & 0 \end{bmatrix} \begin{bmatrix} \Delta x_1 \\ \Delta x_2 \\ \Delta x_3 \end{bmatrix} \end{aligned}\right\} \tag{2.16}$$

The equation (2.16) constitute the state space model

$$\dot{x} = Ax + BU \quad \text{and } Y = Cx + DU \tag{2.17}$$

In order to obtain the A, B, C and D matrices for the linear maglev model, we consider the physical parameter's value from the following table (1).

Table 2.1: Physical parameters of Magnetic Levitation train system[15]

Parameter	unit	Value
m	Kg	10000
R	Ω	1
L	H	0.1
i_0	A	140
x_0	mm	10
k	Nm^2/A^2	0.001
g	m/s^2	9.8

Then from equation (2.16), first evaluate n and p

$$\left.\begin{aligned}
&n = k(x_{30})^2/(x_{10})^3 = 0.001*(140)^2/(0.01)^3 = 19600000\\
&p = k(x_{30})/(x_{10})^2 = 0.001*140/(0.01)^2 = 1400\\
&\therefore A = \begin{bmatrix} 0 & 1 & 0 \\ 1960 & 0 & -0.14 \\ 0 & 0 & -10 \end{bmatrix}\\
&\text{Where in } \frac{n}{m} = \frac{19600000}{10000} = 1960,\ \frac{p}{m} = \frac{1400}{10000} = 0.14 \text{ and } \frac{R}{L} = \frac{1}{0.1} = 10\\
&B = \begin{bmatrix} 0 \\ 0 \\ 10 \end{bmatrix}, \text{ where in } \frac{1}{L} = \frac{1}{0.1} = 10\\
&C = [1\ \ 0\ \ 0] \qquad \text{And } D = 0
\end{aligned}\right\} \tag{2.18}$$

The linearized state space model of train is

$$\left.\begin{aligned}
&\dot{x}(t) = Ax(t) + Bu(t) = \begin{bmatrix} 0 & 1 & 0 \\ 1960 & 0 & -0.14 \\ 0 & 0 & -10 \end{bmatrix} x(t) + \begin{bmatrix} 0 \\ 0 \\ 10 \end{bmatrix} u(t)\\
&y(t) = Cx(t) = [1\ \ 0\ \ 0]x(t)
\end{aligned}\right\} \tag{2.19}$$

And its transfer function is

$$\left.\begin{aligned}
&G(s) = C(sI - A)^{-1}B\\
&(sI - A)^{-1} = \frac{adjiontof(sI-A)}{\det(sI-A)}\\
&sI - A = \begin{bmatrix} s & 0 & 0 \\ 0 & s & 0 \\ 0 & 0 & s \end{bmatrix} - \begin{bmatrix} 0 & 1 & 0 \\ 1960 & 0 & -0.14 \\ 0 & 0 & -10 \end{bmatrix} = \begin{bmatrix} s & -1 & 0 \\ -1960 & s & 0.14 \\ 0 & 0 & s+10 \end{bmatrix}
\end{aligned}\right\} \tag{2.20}$$

$\det(sI - A) = s(s^2+10s-0) + 1960(-s - 10 - 0) + 0 = (s + 10)\,(s^2-1960)$

$a11 = (-1)^2 \det\begin{bmatrix} s & 0.14 \\ 0 & s+10 \end{bmatrix} = s(s + 10)$

$a12 = (-1)^3 det\begin{bmatrix} -1960 & 0.14 \\ 0 & s+10 \end{bmatrix} = 1960(s + 10)$

$a13 = (-1)^4 det\begin{bmatrix} -1960 & s \\ 0 & 0 \end{bmatrix} = 0$

$a21 = (-1)^3 det\begin{bmatrix} -1 & 0 \\ 0 & s+10 \end{bmatrix} = 1(s + 10)$

$a22 = (-1)^4 det\begin{bmatrix} s & 0 \\ 0 & s+10 \end{bmatrix} = s(s + 10)$

$a23 = (-1)^5 det\begin{bmatrix} s-1 & \\ 0 & 0 \end{bmatrix} = 0$

$a31 = (-1)^4 det\begin{bmatrix} -1 & 0 \\ s & 0.14 \end{bmatrix} = -0.14$

$a32 = (-1)^5 det\begin{bmatrix} s & 0 \\ -1960 & 0.14 \end{bmatrix} = -0.14s$

$a33 = (-1)^6 det\begin{bmatrix} s-1 & \\ -1960 & s \end{bmatrix} = s^2 - 1960$

$$\Rightarrow adjiontof(sI - A) = \begin{bmatrix} a11 & a21 & a31 \\ a12 & a22 & a32 \\ a13 & a23 & a33 \end{bmatrix} = \begin{bmatrix} s(s+10) & s+10 & -0.14 \\ 1960(s+10) & s(s+10) & -0.14s \\ 0 & 0 & s^2-1960 \end{bmatrix}$$

$$\therefore (sI - A)^{-1} = \frac{1}{(s+10)(s^2-1960)} \begin{bmatrix} s(s+10) & s+10 & -0.14 \\ 1960(s+10) & s(s+10) & -0.14s \\ 0 & 0 & s^2-1960 \end{bmatrix}$$

$$= \begin{bmatrix} \frac{s}{s^2-1960} & \frac{1}{s^2-1960} & -\frac{0.14}{(s+10)(s^2-1960)} \\ \frac{1960}{s^2-1960} & \frac{s}{s^2-1960} & -\frac{0.14s}{(s+10)(s^2-1960)} \\ 0 & 0 & \frac{1}{s+10} \end{bmatrix}$$

$$\Rightarrow G(s) = [1\ \ 0\ \ 0] \begin{bmatrix} \frac{s}{s^2-1960} & \frac{1}{s^2-1960} & -\frac{0.14}{(s+10)(s^2-1960)} \\ \frac{1960}{s^2-1960} & \frac{s}{s^2-1960} & -\frac{0.14s}{(s+10)(s^2-1960)} \\ 0 & 0 & \frac{1}{s+10} \end{bmatrix} \begin{bmatrix} 0 \\ 0 \\ 10 \end{bmatrix} = -\frac{1.4}{(s+10)(s^2-1960)} \qquad (2.21)$$

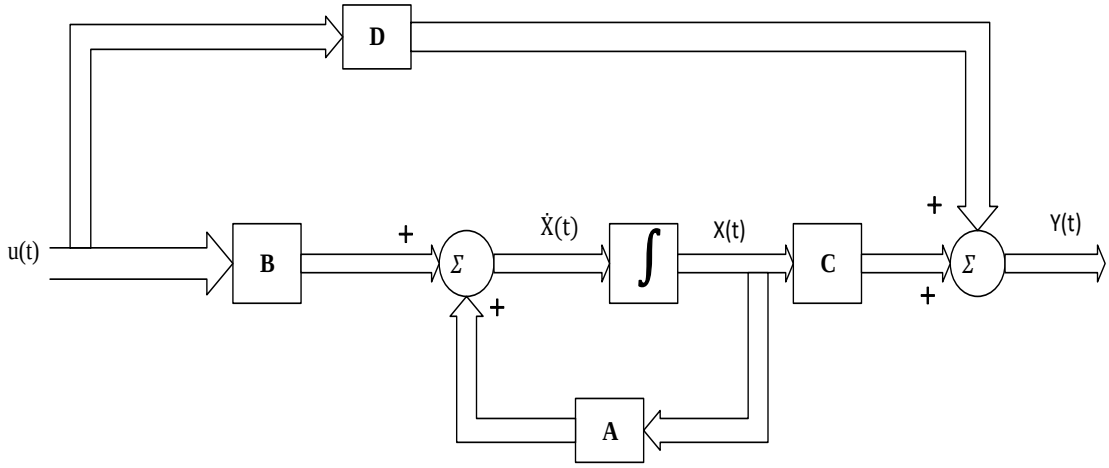

Figure 2.3: Block Diagram representation of LTI Maglev System

The transfer function shows that the system has no zero's in the right half 's' plane, but has a pole in the right half 's 'plane which makes it open-loop unstable, The open loop poles are $s_1 = -10$, $s_2 = -\sqrt{1960}$ and $s_3 = \sqrt{1960}$.The uncompensated root locus and the step response results can be seen in Fig(2.4&2.5).

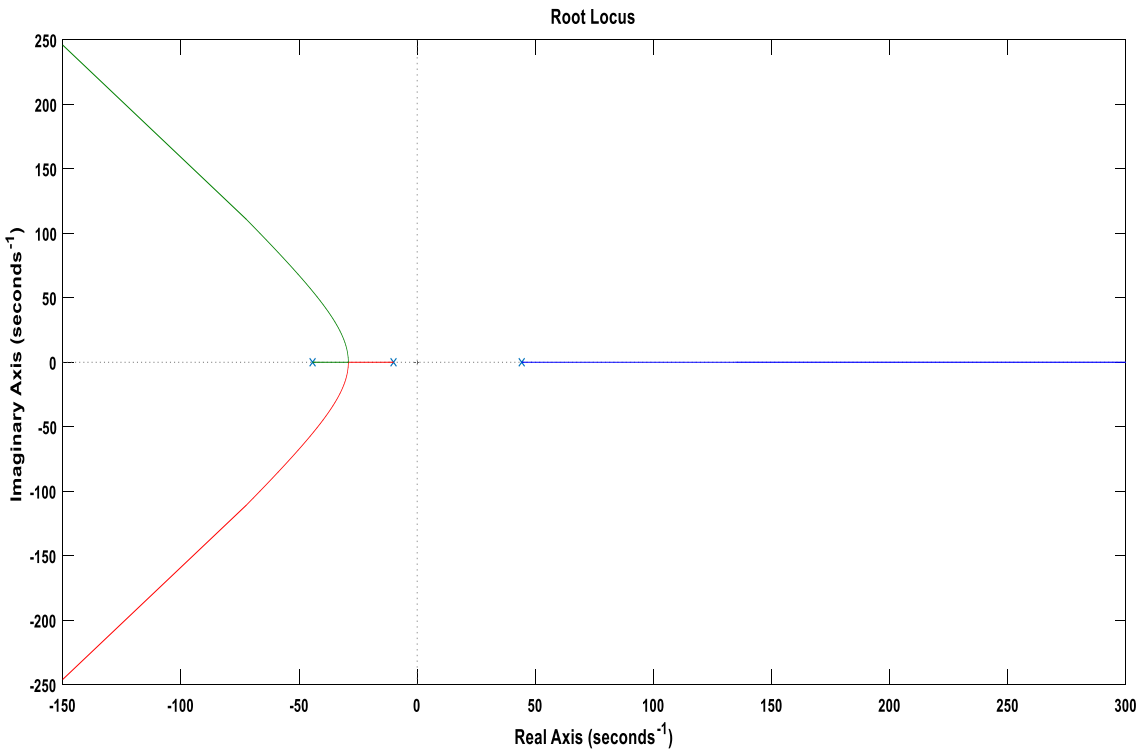

Fig 2.4: Root locus of the uncompensated Maglev system

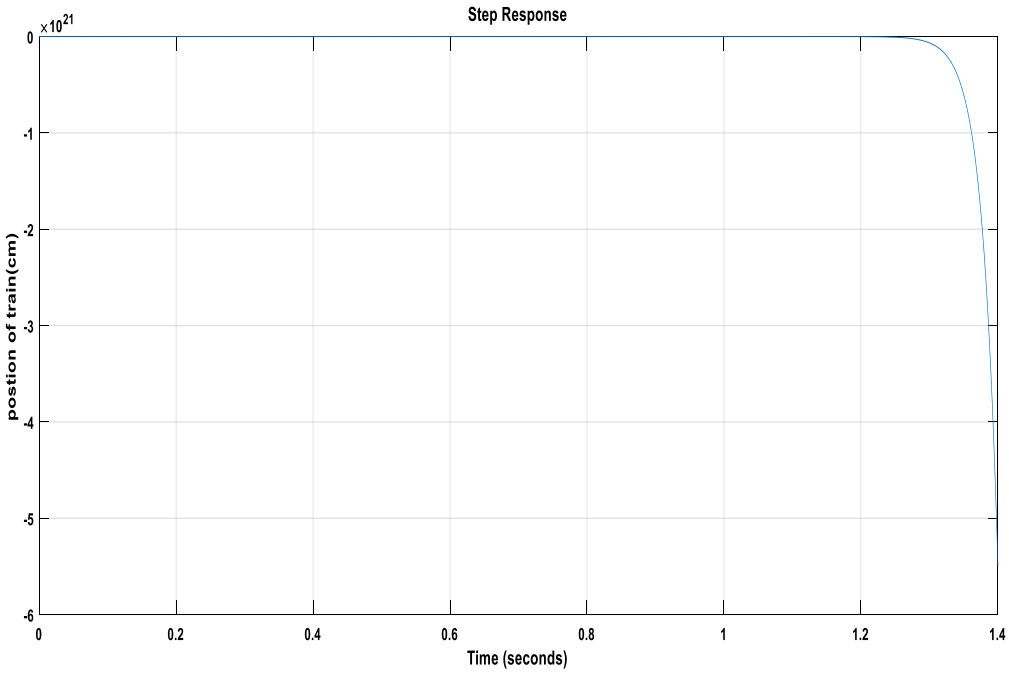

Figure 2.5: Response of Maglev system without controller

It is clear from the response that the system is unstable without controller; hence a controller is needed in order to stabilize the system. Thus a FOPID & NN controller was implemented for the system.

CHAPTER THREE

3. CONTROLLER DESIGN OF MAGLEV SYSTEM

3.1. Proportional-Derivative Compensated Controller for Maglev System

There are two types of control system in control engineering such as opean–loop control system and closed loop control system**.** If the actuating signal (input of the plant/system) depends only on the reference signal and independent of the plant output which is called opean–loop control system while if the actuating signal depends both the reference signal and output of plant a control system is called feedback control (closed loop) system. The opean–loop control system is not used in practical since a plant/system is easily affected by parameter variations, noise and disturbance but The feedback control system is most widely used in practical because it can reduce the effect of parameter variations, disturbance and suppress noise.

The simplest way to stabilize the system is to use the proportional derivative compensated controller. In order to pull the unstable right side pole to the left side and make the system stable, a general cascade proportional derivative controller is described by the transfer function as follows:

$$G_c\,(s) = k_p + k_d s \tag{3.1}$$

This controller is used to improve the system transient and steady-state response. Combining this with the maglev system transfer function results in the open-loop transfer function

$$G_c\,(s)\,G\,(s) = -\frac{1.4}{(s+10)(s^2-1960)}\,(k_p + k_d s) \tag{3.2}$$

The closed loop transfer function and characteristic polynomial of equation (3.2) is respectively given as

$$\left.\begin{aligned}
&G_{CL}\,(s) = G_c\,(s)\,G\,(s)\,/\,1+G_c\,(s)\,G\,(s)\\
&1+G_c(s)\,G\,(s) = 0\\
&1+G_c\,(s)\,G\,(s) = (s+10)(s^2-1960) - 1.4k_p - k_d s = 0\\
&\qquad\qquad = s^3 + 10s^2 - 1960s - 19600 - 1.4k_P - 1.4k_d s = 0
\end{aligned}\right\} \tag{3.3}$$

To determine the choices of values of k_p and k_d that will make sure system stability, the popular Routh-Hurwitz criterion is used for the characteristic polynomial equation

$$\left.\begin{array}{lll} s^3 & 1 & -1960 - 1.4k_{\mathrm{d}} \\ s^2 & 10 & -19600 - 1.4k_{\mathrm{p}} \\ s & -1960 - 1.4k_{\mathrm{d}} & +1960 + 0.14k_{\mathrm{p}} \\ s^0 & -19600 - 1.4k_{\mathrm{P}} & \end{array}\right\} \quad (3.4)$$

For s^2 and s^0row puts the restriction $k_{\mathrm{p}} < -14000$, and the s^3 row is $k_{\mathrm{d}} < -1400$, the value of k_{d} is choosing-15000 .the s^1 row is equal to $0.14k_p - 1.4k_{\mathrm{d}}$, and this function must be positive for a stable system.

$$\left.\begin{array}{l} \Rightarrow 0.14k_p - 1.4(-15000) > 0 \\ k_p > -150000 \\ \therefore -150000 < k_p < -14000 \end{array}\right\} \quad (3.5)$$

The system is stable if the conditions, $-150000 < k_{\mathrm{p}} < -14000$, $k_{\mathrm{d}} < -1400$ and $k_p/k_{\mathrm{d}} < 10$ are met.

Now let us consider the Values of k_p and k_{d} are -100000 and -15000 respectively.

Then substitute these values into equation (3.2) we get the open loop transfer function

$$G_{\mathrm{o}}(s) = -\frac{1.4}{(s+10)(s^2-1960)}(-15000s - 100000) = \frac{21000s+140000}{(s+10)(s^2-1960)} \quad (3.6)$$

The root locus and step response of the compensated Maglev system is shown in Fig3.1 and Fig 3.2 respectively. This shows that the system is a stable system and use for the other analysis.

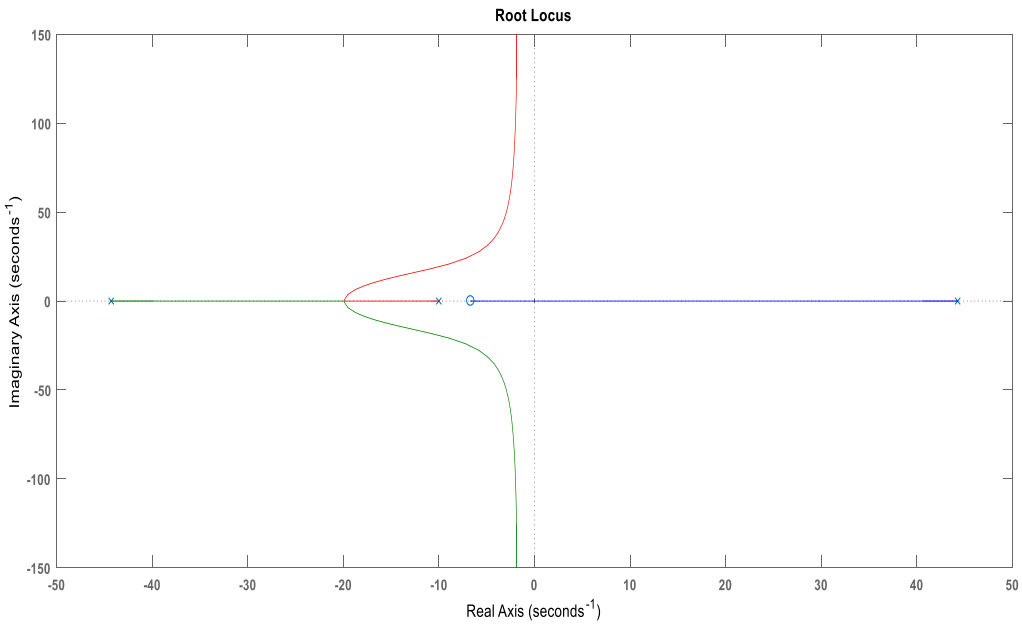

Figure3.1: Root locus of the compensated Maglev system

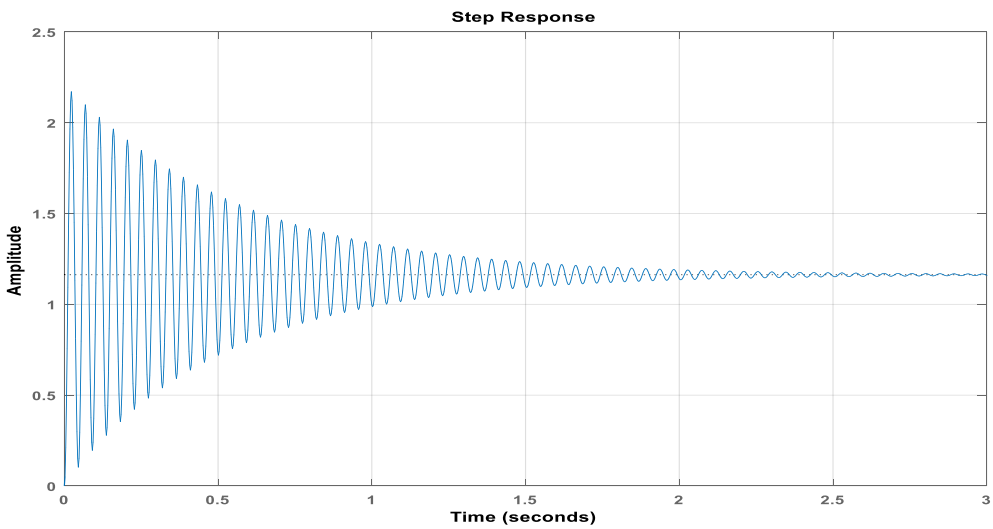

Figure 3.2: Step Response of the compensated Maglev system

With the compensator mentioned in (3.3).The system parameters are

i. Rise time =0.0079 seconds

ii. Settling time =2.1 seconds

iii. Overshoot = 86.7%

iv. Peak Response = 2.17

The system performance is unacceptable, and then to get best system we can design another controller which is a PID controller.

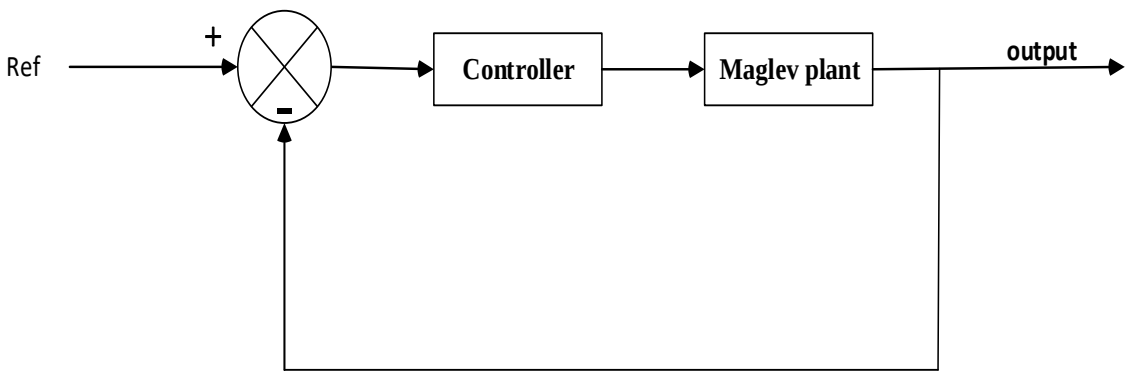

Figure 3.3: Schematic diagram of controller with the Maglev plant

3.2. PID Controller Design for Maglev System

PID controller also called as three term controller was introduced by Taylor Instrument Company in 1936. PID controller can be interpreted as 'P' depends on 'present error', 'I' depend on 'accumulated past error' and 'D' depends on 'Future' error. The weighted sum of these three elements is control signal which is applied to plant control input. PID controller design is simple in structure and easy to design, it continues to be an important method in control engineering. Linear PID controllers are the most popular and the most commonly used industrial controllers. The popularity and widespread use of PID or three-term controllers is attributed primarily to their simplicity and performance characteristics, where the 'I' term ensures robust steady-state tracking of step commands while the 'P' and 'D' terms provide stability and desirable transient behavior. the conventional PID is a linear controller, it is efficient only for a limited operating range when applied in nonlinear processes[17], [18].

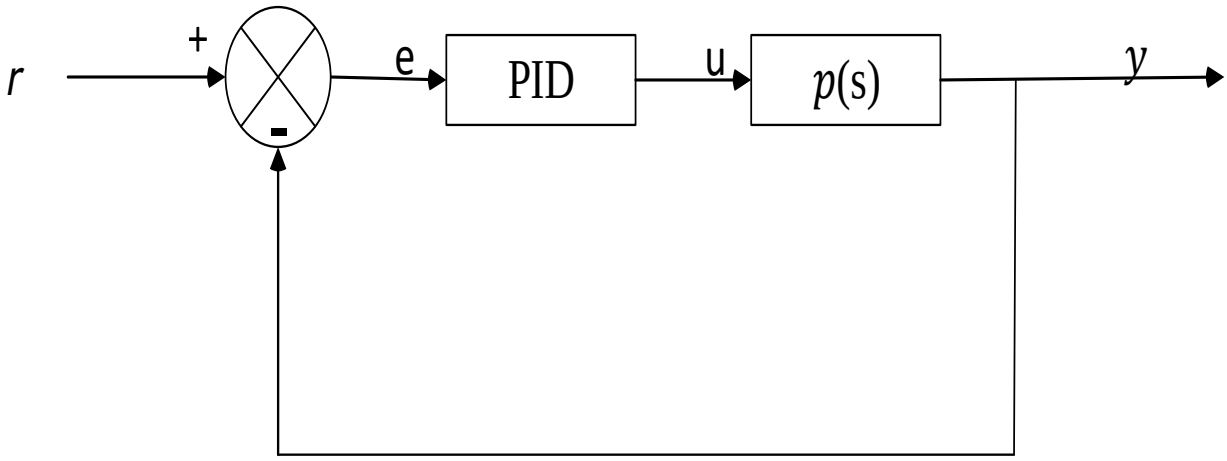

Figure 3.4: PID Control System with unity feedback

Proportional plus Integral plus Derivative control action is expressed as

$$u(t) = k_P\, e(t) + k_i \int e(t)dt + k_d e(t) \tag{3.7}$$

Taking Laplace transforms

$$U(s) = [K_P + K_i \frac{1}{s} + K_d s]E(s) \tag{3.8}$$

The closed loop transfer function could be written as follows:

$$\frac{Y(s)}{R(s)} = \frac{C(S)P(s)}{1+C(s)P(S)} \tag{3.9}$$

This tells us that the poles of the closed loop transfer functions are actually the zeroes of $1 + c(s)p(s)$. Increasing the proportional controller (k_p) reduces the rise time, increases the overshoot and will reduces, but never eliminate, the steady-state error, increasing the integral controller (k_i) decreases the rise time, increases both the overshoot and the settling time, and eliminates the steady-state error and A derivative controller (k_d) will have the effect of increasing the stability of the system, reducing both the overshoot and the settling time. In this thesis the selection of the PID controller parameters can be obtained using MATLAB. One of the possibilities to improve PID controllers is to use fractional order controllers with non-integer derivation and integration parts.

3.3. BASIC CONCEPTS OF FRACTIONAL ORDER CALCULUS

Several applications of fractional calculus can be found the area of control systems. Fractional calculus allows the derivatives and integrals to be of any real number. The fractional-order differentiator can be denoted by a general fundamental operator $aD^{q}t$ as a generalization of the differential and integral operators, which is defined as follows

$$a\,D^{q}t = \begin{cases} d^{\alpha}/dt^{\alpha} & R\,(\alpha) > 0, \\ 1 & R(\alpha) = 0, \\ \int_a^t (dt)^{-\alpha} & R(\alpha) < 0, \end{cases} \tag{3.10}$$

Where α is the fractional order which can be a complex number, the constant 'a' is related to the initial conditions. There are two commonly used definitions for the general fractional differentiation and integration, i.e., the Grunwald–Letnikov (GL) and the Rieman Liouville definitions (Oldham 1974).Perhaps the best known due to its most suitability for the realization of discrete control algorithms. The Grunwald-Letnikov definition is expresses as:

$$aD^{q}tf(t) = \lim_{h\to 0} h^{-q}\sum_{j=0}^{[(t-a)/h]}(-1)^{j}\binom{q}{j}f(t-jh), \text{Where}\frac{t-a}{h}\text{, is an integer} \tag{3.11}$$

The Riemann-Liouville definition is expresses as:

$$f\,(t) = d^n/dt^{\,n}\int_a^t (f(\tau)/(t-\tau)^{q-n+1})d\tau \tag{3.12}$$

For a wide class of functions which appear in real physical and engineering applications, the Riemann-Liouville and the Grunwald-Letnikov definitions are equivalent [19], [20].

3.3.1. FOPID Controller Design for Maglev System

Podlubny proposed a general form of the PID controller, which is called the fractional order $PI^{\lambda}D^{\delta}$ controller, where the values of λ and δ lie between 0&1. Compared with the PID controller, the FOPID controller has more two adjustable parameters, which makes the parameter tuning more flexible, it is very important significative for improving the control accuracy, therefore, the fractional order $PI^{\lambda}D^{\delta}$ controller is applied in the active magnetic levitation control system [19],[20].

The differential equation of fractional order $PI^{\lambda}D^{\delta}$ controller is shown as equation (3.13).

$$U(t) = k_p\, e\,(t) + k_i\, Dt^{-\lambda}\, e\,(t) + k_d Dt^{\delta}\, e\,(t) \tag{3.13}$$

Applying Laplace transform to this equation with zero initial conditions, the transfer function of the controller can be expressed by:

$$G_{fc}(\mathrm{s}) = \frac{U(s)}{E(s)} = k_p + k_i\, s^{-\lambda} + k_d s^{\delta} \tag{3.14}$$

Taking λ= 1 and δ= 1 it is the conventional PID controller, if δ= 0 and $\lambda = 1$ it is the conventional PI controller, if λ= 0 and δ= 1 it is the conventional PD controller and if both δ & $\lambda = 0$ it is the conventional P controller. The four kinds of controller are shown is Fig 3.5, the dark regions is fractional order $PI^{\lambda}D^{\delta}$ controller, it can be seen that the adjustable range of the fractional $PI^{\lambda}D^{\delta}$ controller is more wide than conventional PID controller, therefore, the regulation performance of the fractional order controller is more superior than conventional PID controller.

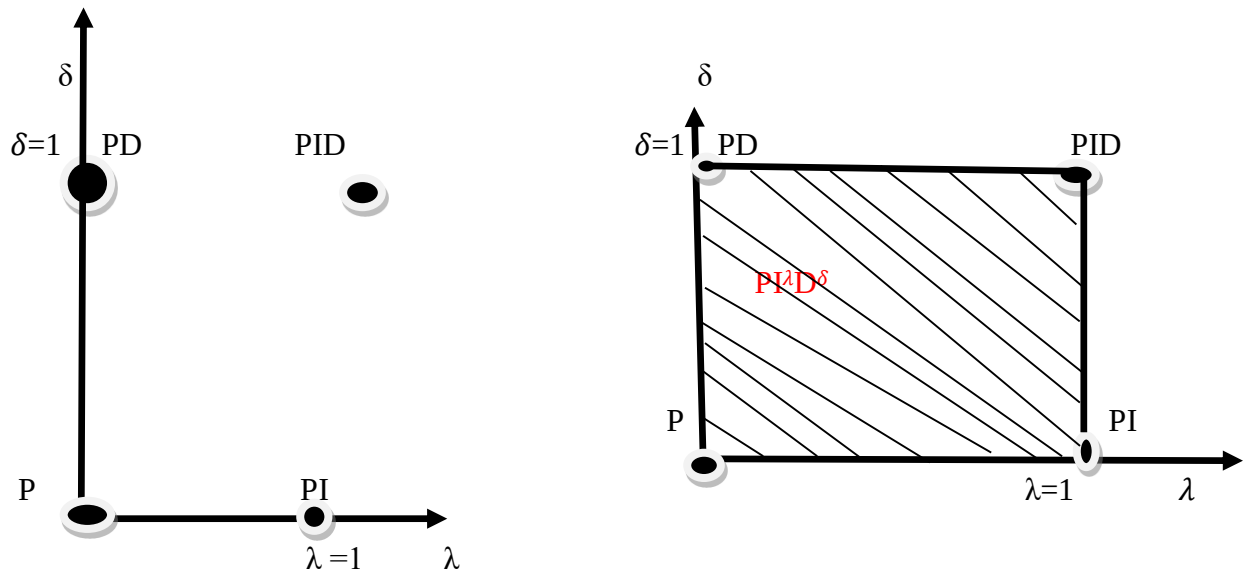

a) Integer order

b) fractional order

Figure3.5: PID plane

The schematic diagram of Maglev plant with FOPID controller is shown in the fig.3.6. Objective functions were developed to find FOPID controller parameter that results in reasonably small overshoot, fastest rise time and quickest settling time. For this purpose my objective function was tested and this is Integral Square Error (ISE), where it is given by Eqn. (3.15)

$$\text{ISE} = \int_0^T e^2(t)dt \tag{3.15}$$

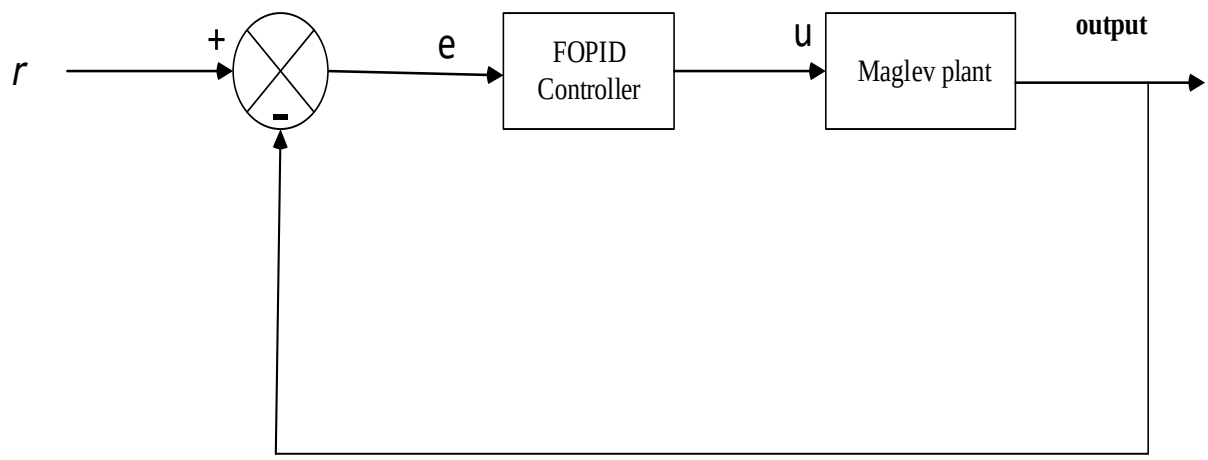

Figure 3.6: schematic diagram of Maglev plant with FOPID controller

In this paper the Magnetic Levitation system controlled by FOPID controller is simulated in MATLAB environment using FOMCON Toolbox in the next chapter.

3.4. NN Controller Design for Maglev System

Adaptive control methods such as the evolutionary computing fuzzy logics and neural networks (NN) are classified as intelligent techniques due to their knowledge based decision making capabilities. Intelligent techniques are more capable of performing complex tasks as compared to conventional control methods[21]. Among all the AI techniques, artificial neural network (ANN) or neural network (NN) is the most important discipline, and its potential impact on Maglev System. An ANN is an interconnection of simple processing units which communicate by sending signals and massively parallel. Since FOPID controller parameters are to be tuned and it is replaced with the NN controller shown in the Fig 3.7[22]

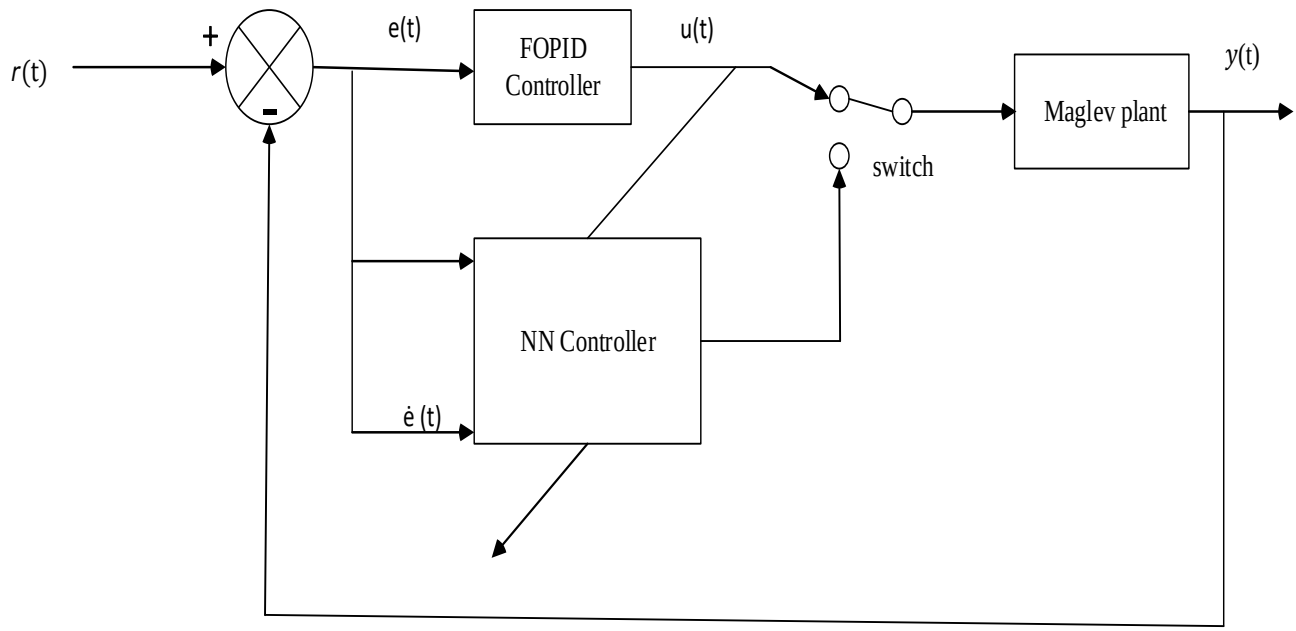

Figure 3.7: Training a neural network controller

In this study, I use a type of neural networks which is called the Feed forward networks. A feed forward network can be defined as connection extends from input to output without any feedback or delay and Used for mapping or function approximation. The advantage of feed forward network is; have a flexibility of choosing from a host of linear and nonlinear activation

functions for the hidden layer and the output layer neurons, considered as global approximation and much simpler. Feed forward network is trained by back propagation algorithm (belongs into Supervised Learning),this means a set of input vectors and a set of associated desired output vectors called target vectors are used to train a network until it can approximate a function. MLPs are the most common type of feed-forward networks.Fig.3.8 shows an MLP which has three types of layers: an input layer, an output layer and a hidden layer. Neurons in input layer only act as buffers for distributing the input signals $\boldsymbol{N}_{\mathrm{i}}(\boldsymbol{i} = \mathbf{1}, \mathbf{2}, \ldots \boldsymbol{n})$ (The input units are merely 'fan–out' units; no processing takes place) to neurons in the hidden layer. The activation of a hidden unit is a function $\boldsymbol{f}_{\mathrm{i}}$ of the weighted inputs plus a bias, as given in in eq. (3.16). The output of the hidden units' is fed into the output layer of output units.

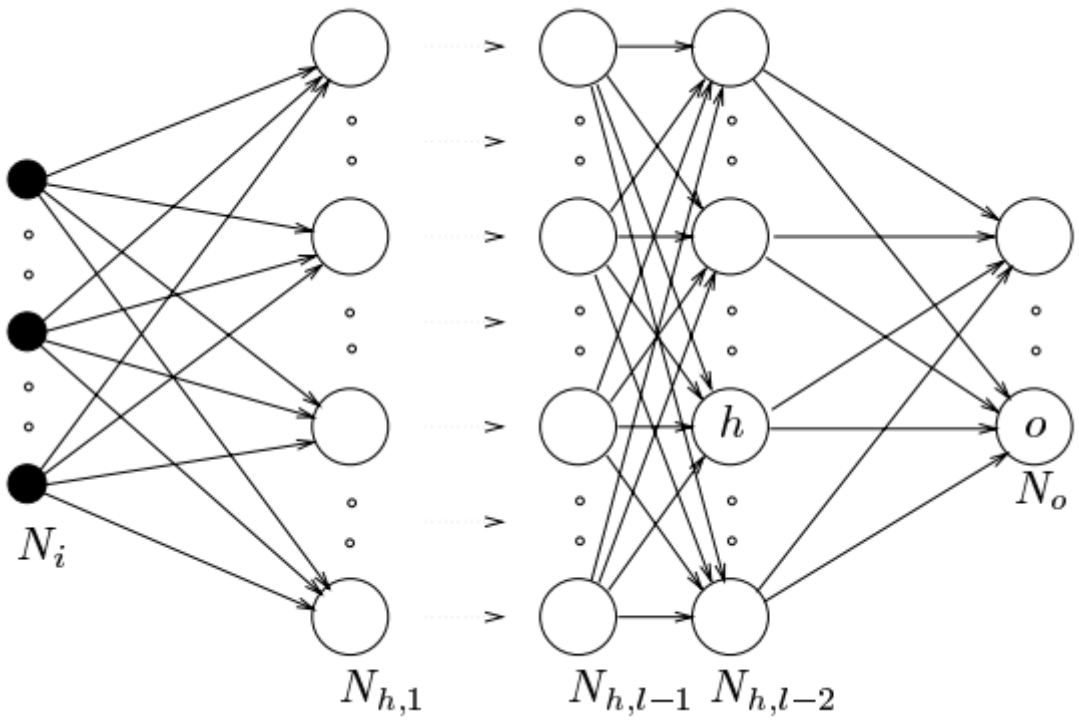

Figure 3.8: a multi–layer network with l layers of units

$$\mathcal{Y}_{\kappa}(t+1) = f_{\kappa}(\textstyle\sum_j w_{j\kappa}(t)\, \mathrm{j}\,(t) + \theta_{\kappa}(t)) \tag{3.16}$$

In this work NN is divided into three layers, named the input layer with 2 neurons, the hidden layer with 2 neurons, and the output layer with 1 neuron[13].The simulation is done using the Mat –lab in the next chapter.

CHAPTER FOUR

4. SIMULATIONS AND DISCUSSIONS

If a system is unstable, the system may be burnout, disintegrate or saturate which is useless in practice. Stability, track desired response, suppress noise and rejection of disturbance is a basic requirement for all systems therefore a controller is deign to fulfill the limitations of unstable system or it is design to achieve a given performance .The performance is given in terms of specifications . Most common specifications are Steady state error and Transient performance, steady state error smaller is better and also transient performances are settling time, rise time and overshoot. Smaller is better. The following time domain specifications are to be considered in the design of controllers for the Maglev train.

Settling time	$T_s < 0.2$ sec	based on a unit step Command
Steady State Error	$e_{ss} < 0.09$	
Overshoot	$O_v \leq 5\%$	

The open loop transfer function of the Maglev system shown in eqn. (3.6) is used for designing controller to improve system performance. In this section, PID, FOPID and NN simulation result of Maglev System is shown and discuss briefly. Fig.4.1 shows the MATLAB SIMULINK model for Maglev Train control using PID and FOPID controllers.

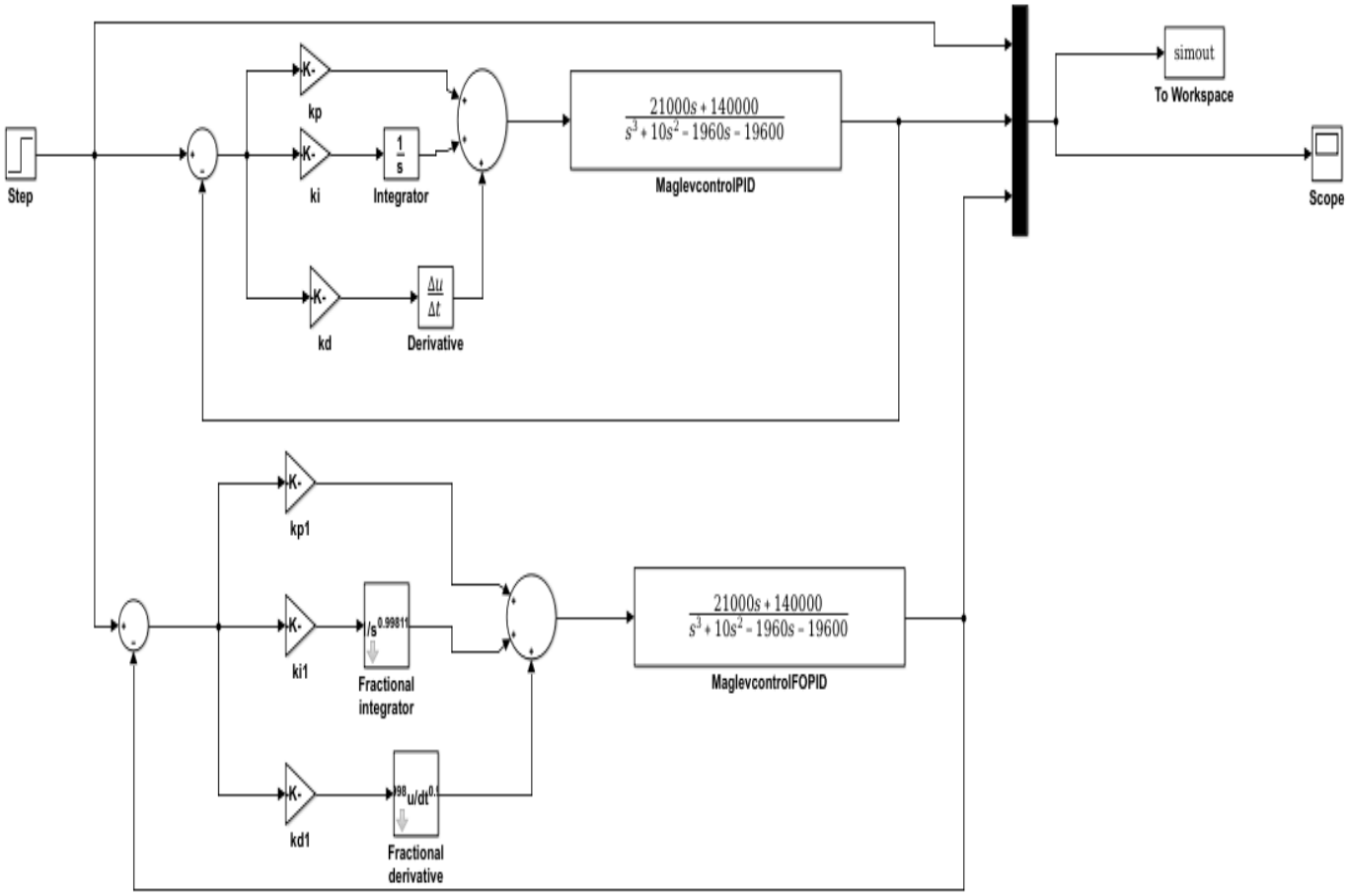

Figure 4.1: SIMULINK Diagram of Maglev Train control using PID and FOPID controller.

A PID controller is designed for the Maglev Train control system by using MATLAB SIMULINK PID tuner block with the following optimal parameters:

$k_p = 4.12$

$k_i = 127.629$

$k_d = 0.033$

Simulation result of integer order PID controller for the Maglev train control system is obtained with a unit step input depicted in Fig.4.2.

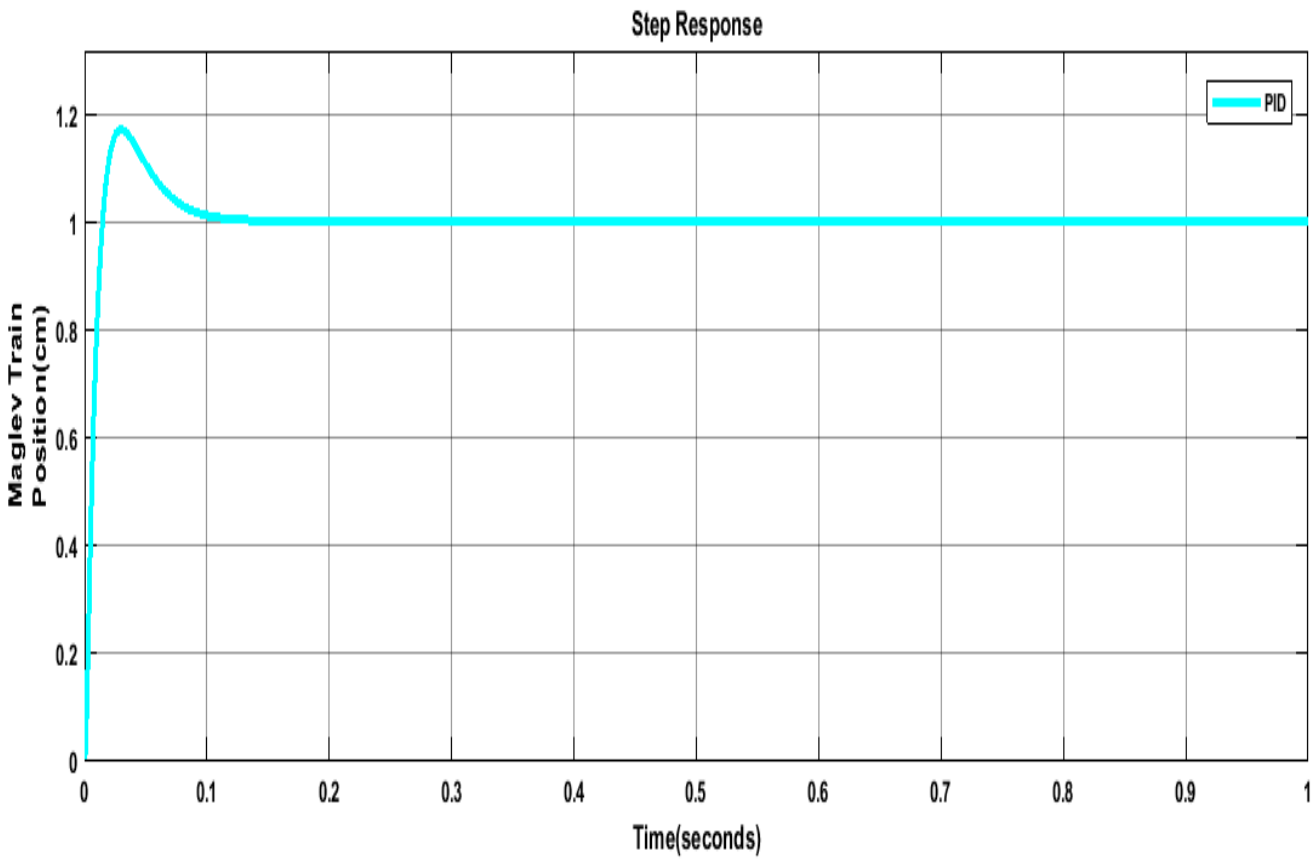

Figure 4.2: Closed loop unit step response of PID Controller for Maglev train system

Table 4.1: The performance specifications of the Maglev train system controlled by PID controller parameters

Performance Characteristics	PID Controller Optimal Values
Rise Time	0.02 second
Settling Time	0.103 second
Overshoot	18.452%
Peak Response	1.184
Steady State Error	0.18

Using conventional PID controller parameters the Maglev train system is not reached a satisfactory performance; we can observed (Table 4.1) that PID controller shows more peak overshoot and steady state error. To improve the performance of PID controller we can design a FOPID controller. Maglev train control system is extremely complex, nonlinear and uncertain

system. Designed for such systems a fractional PID controller is better than integer order PID controller since FOPID controller having more number of tuning parameters.

The integer order system is identified to fractional order system by FOMCON Toolbox. FOMCON stands for ‘’Fractional–Order Modeling and Control’’. It is a MATLAB toolbox and is built upon an existing mini toolbox called FOTF (Fractional–Order Transfer Functions). FOMCON provides time domain and frequency domain fractional order system analysis and confirming system stability[19]. The FOMCON toolbox consists of the following modules:

- Main module (fractional system analysis). The system analysis module is the main module of the FOMCON toolbox. It serves as a foundation for fractional-order control systems engineering and hence for all other modules.
- Identification module (system identification in the time and frequency domains).
- Control module (fractional PID controller design, tuning and optimization tools as well as some additional features).

All the modules are interconnected and can be accessed from the graphical user interface as depicted in Figure 4.3.

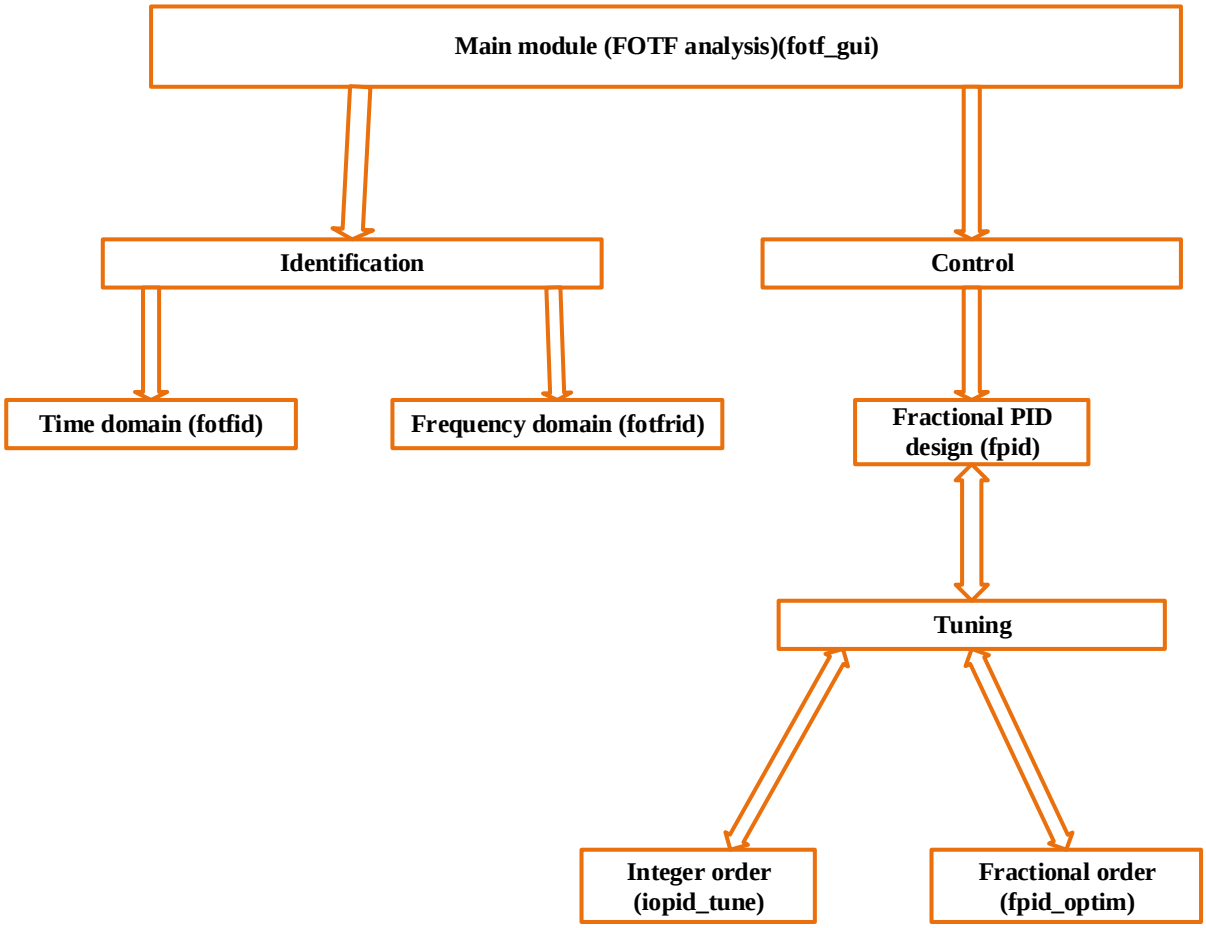

Figure 4.3: FOMCON module relations [19]

In this paper the purpose of designing FOPID controller for the Maglev Train control system is to obtain a good performance specification than integer order PID. The controller design is based on MATLAB Graphical user interface. To design a FOPID controller using MATLAB the author strictly followed the following steps:

1. First add FOTF in MATLAB,
2. Checking the stability of Maglev plant,
3. From FOTF Viewer click Tools menu and select Fractional PID design tools,
4. Click tuning tools of Fractional PID design and choose Optimize button,
5. From FPID optimization tool approximation filter, maximum and minimum tuning values, performance metric and maximum number of iterations are determined,
6. Finally click the optimize button and cheek optimal values of FOPID controller that stabilizes the Maglev Train control System.

The graphical user interface for the main module is called FOTF Viewer. It is shown in Figure 4.4. In left panel of the user interface, it is possible to add the fractional-order transfer function by pressing the Add... button. The system workspace name, transfer function polynomials and input-output delay can now be entered as shown in Figure 4.5. After pressing the OK button the system will be saved to workspace under a variable name “G” and will appear in the GUI system and approximation selected is Oustalopu filter, gives a very good approximation and widely used.

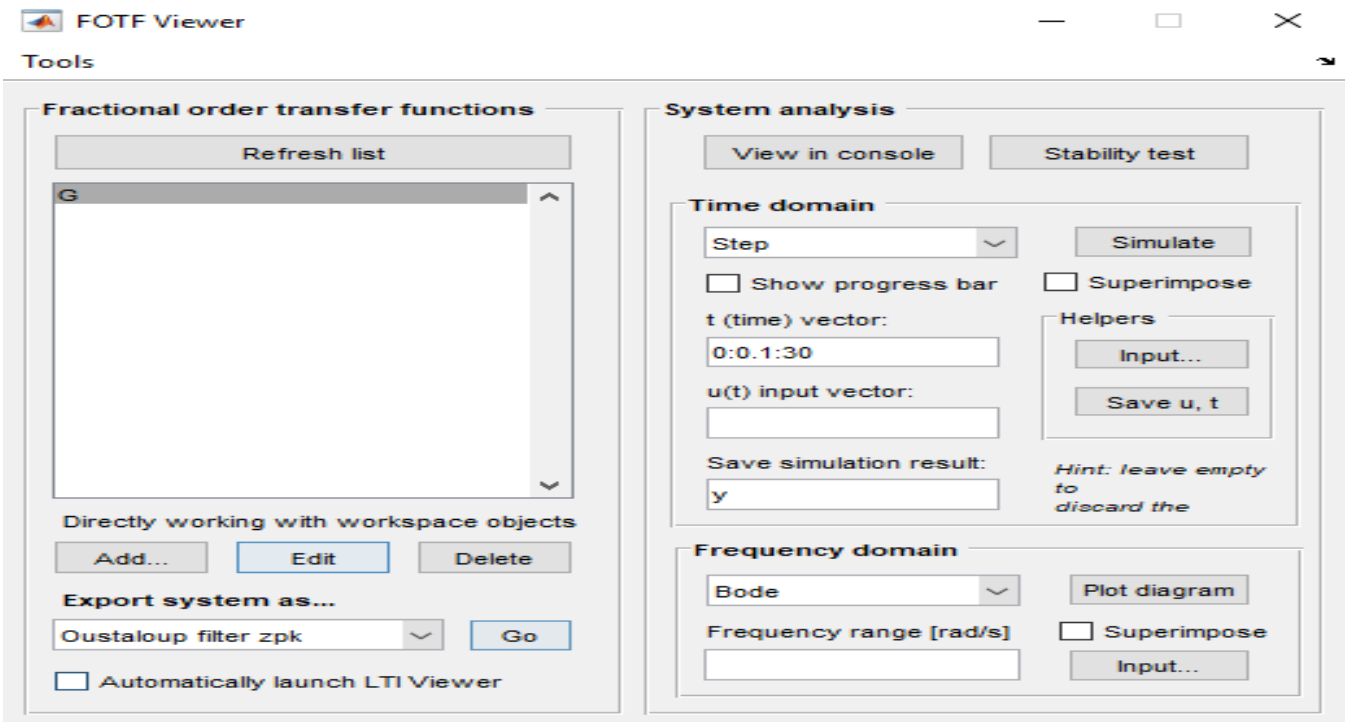

Figure 4.4: FOTF Viewer graphical user interface

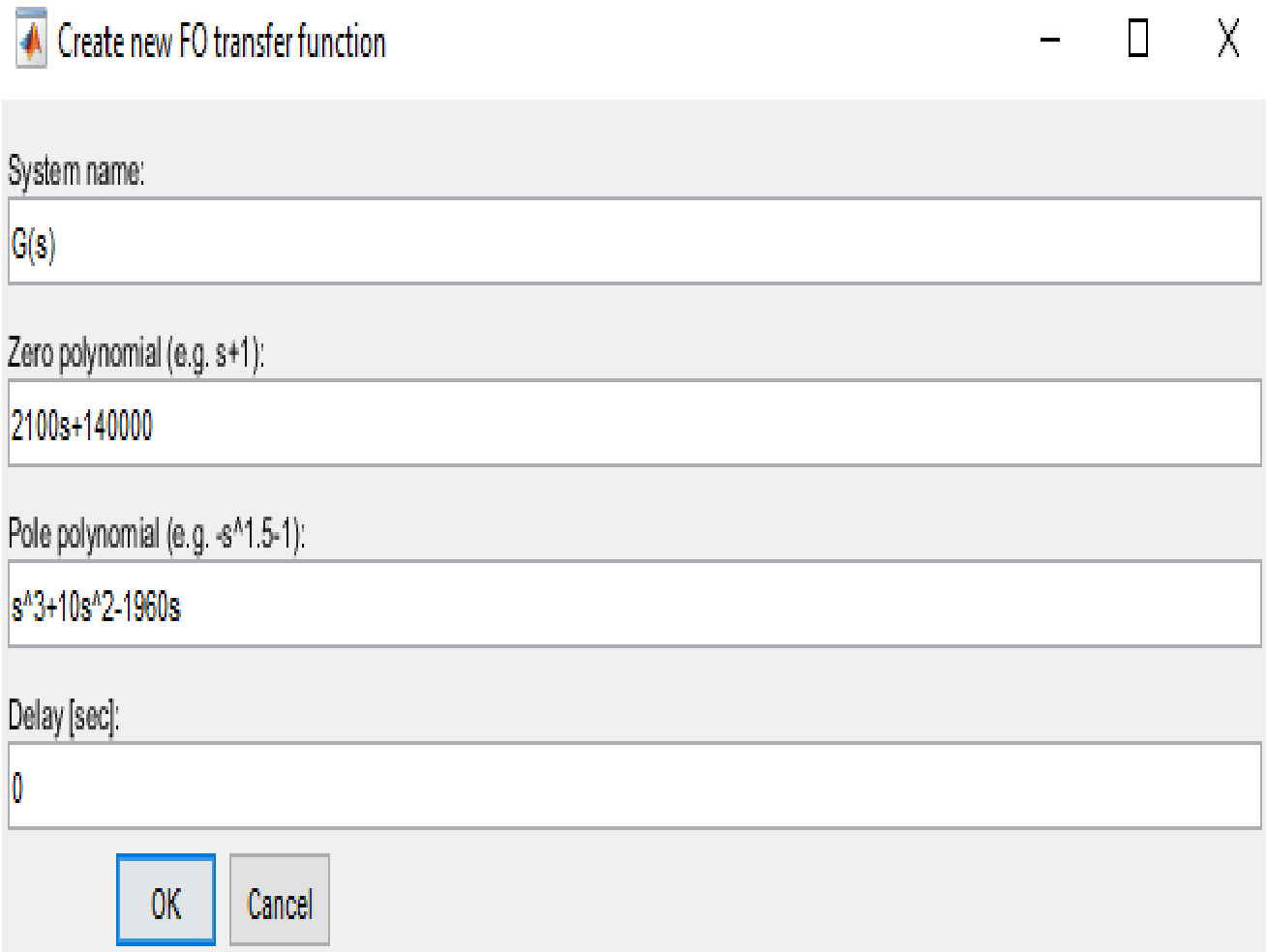

Figure 4.5: New FO transfer function

To test this system for stability press the Stability test button located in the right panel and system is unstable with order $q = 1$. The shaded area represents the unstable region since pole is inside it, the system is not stable.

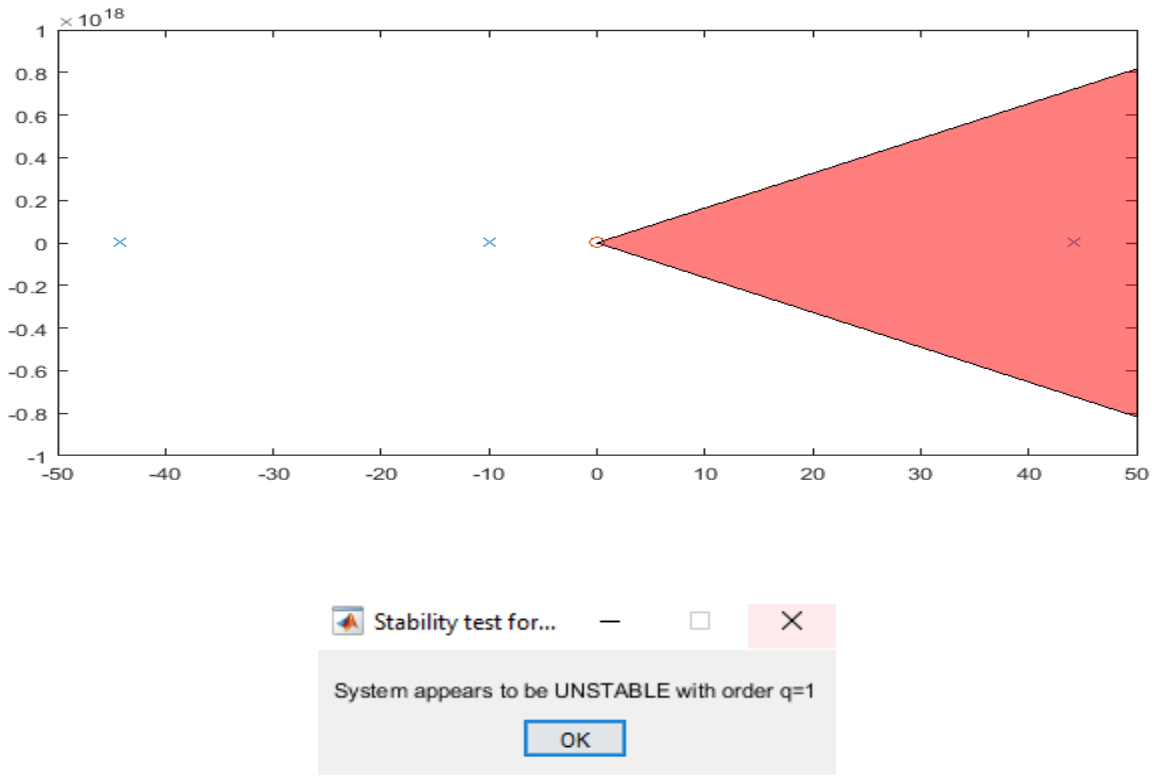

Figure 4.6: Maglev System (IO plant) viewing instability without controller.

In the FOTF Tools menu is used to access other graphical user interfaces:

- Time-domain identification tool (fotfid),
- Frequency-domain identification tool (fotfrid) and
- Fractional PID design tool (fpid).

In this thesis from the MATLAB we can access Fractional PID Design Tool. Its graphical user interface contains the unity feedback control system, which is used to obtain the fractional control system. We can set the $PI^{\lambda}D^{\delta}$ parameters in the left side from the figure (see Figure 4.7). To save the fractional controller clicks the Export PID controller workspace button. In

the fractional control system panel we can view controller, plant and full control system in the console, simulating the designed control system and exporting it to MATLAB workspace.

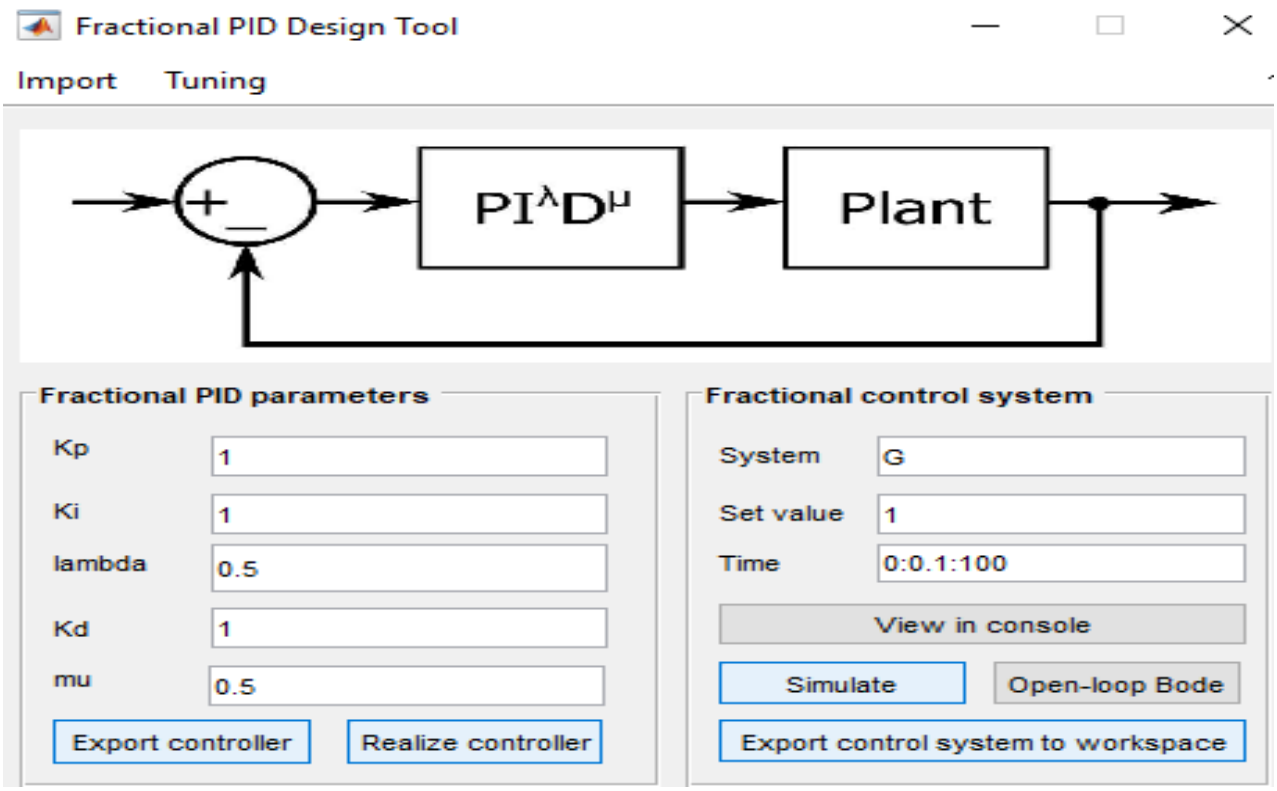

Figure 4.7: Fractional PID Design Tool graphical user interface

The Tuning menu allows to access tuning tools:

- Integer-order PID tuning tool by process model approximation and
- Fractional PID optimization tool.

Then I am choosing Fractional PID optimization and the initial values for fractional PID optimization will be current values, taken from the left panel (see Figure 4.8). The Plant model contains user controls to select the plant for which to obtain the fractional PID and simulation options to use for control system approximation; The Fractional PID controller parameters is also used for entering all controller parameters including their minimum and maximum allowed values (Look figure below). Finally, the Optimization and performance settings (Figure below) is used to attain the desired performance specifications, and I choose the performance metric ISE, simulate optimization results on completion and limit the number of optimization iterations (which is 220).when pressing the Optimize button will begin the optimization process and obtained optimal results of FOPID, also the design is complete.

Tuning method selected here is tuning all parameters with the range of $k_p \in [4, 11]$, $k_i \in [127,279]$, $k_d \in [0.03,0.1]$, $\lambda \in [0.1,0.99999]$ and $\delta \in [0.1,0.99999]$ but available options are:

- Tune all parameters,
- Fix exponents,
- Fix gains.

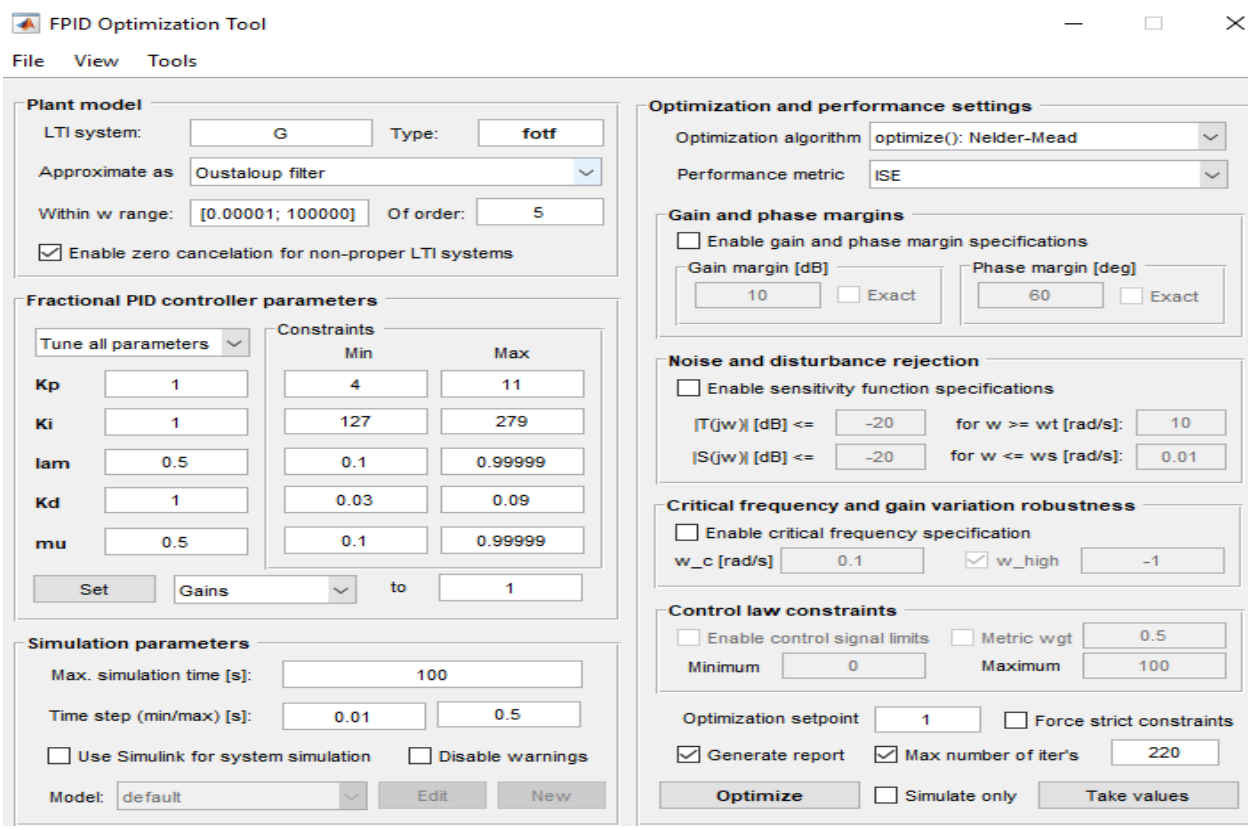

Figure 4.8: FPID Optimization Tool

Table 4.2: Using FOMCON Toolbox simulated in MATLAB the optimal values of $PI^{\lambda}D^{\delta}$ controller parameters

FOPID Controller Parameters	Values
k_p	10.123
k_i	277.629
k_d	0.099
λ	0.99811
δ	0.99998

Then substituting these design parameters (Table 4.3) into Eqn. (3.11), we get the following fractional order PID controller.

$$G_{\text{FOPID}}(s) = 10.123 + 277.629\, s^{-0.99811} + 0.099 s^{0.99998} \tag{4}$$

The closed loop transfer function of Maglev Train system with fractional order PID controller is

$G_{\text{CL}}(s)$ =2079s^{2.9981}+2.1258e+05s^{1.9981}+13860s^{1.9981}+5.8302e+06s+1.4172e+06s^ {0.99811} +3.8868e+07

S^{3.9981}+10s^{2.9981}+2079s^{2.9981}+2.1062e+05s^{1.9981}+13860s^{1.9981}+5.8302e+06s+1.3976e+06s^{0.99811}+3.8868e+07 (4.1)

The Maglev Train system is stable when the FOPID controller is applied. The stability region of Maglev Train system controlled with FOPID controller is shown in Fig 4.9.

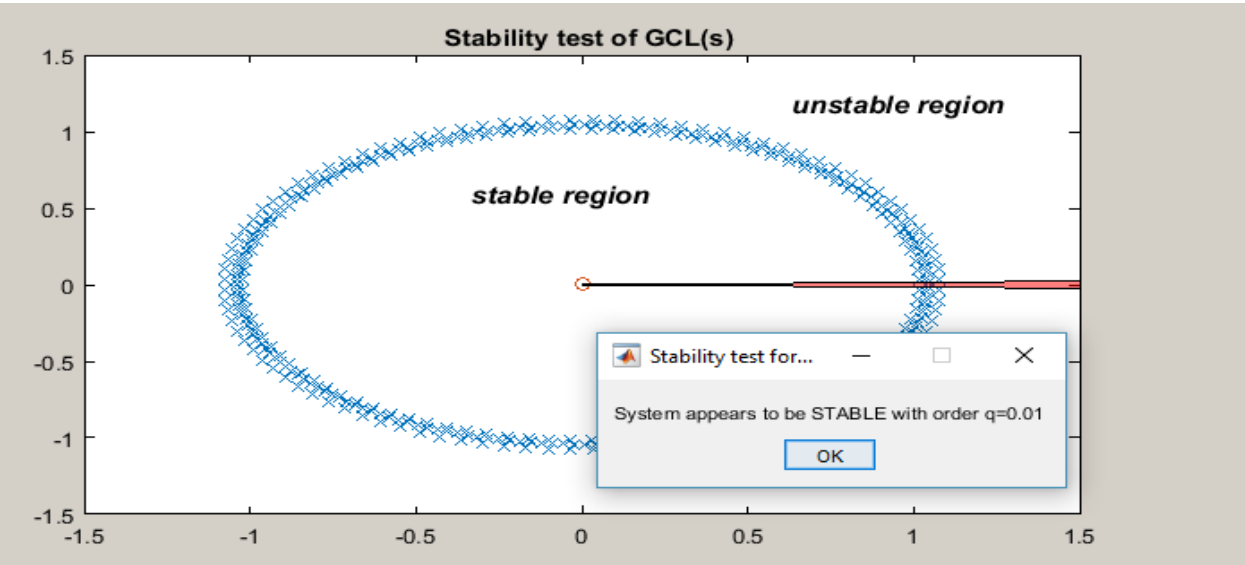

Figure 4.9: showing stability of Maglev Train system with FOPID controller

Using optimal values of $PI^{\lambda}D^{\delta}$ controller design the simulation result for Maglev Train control system is depicted in Fig.4.10.

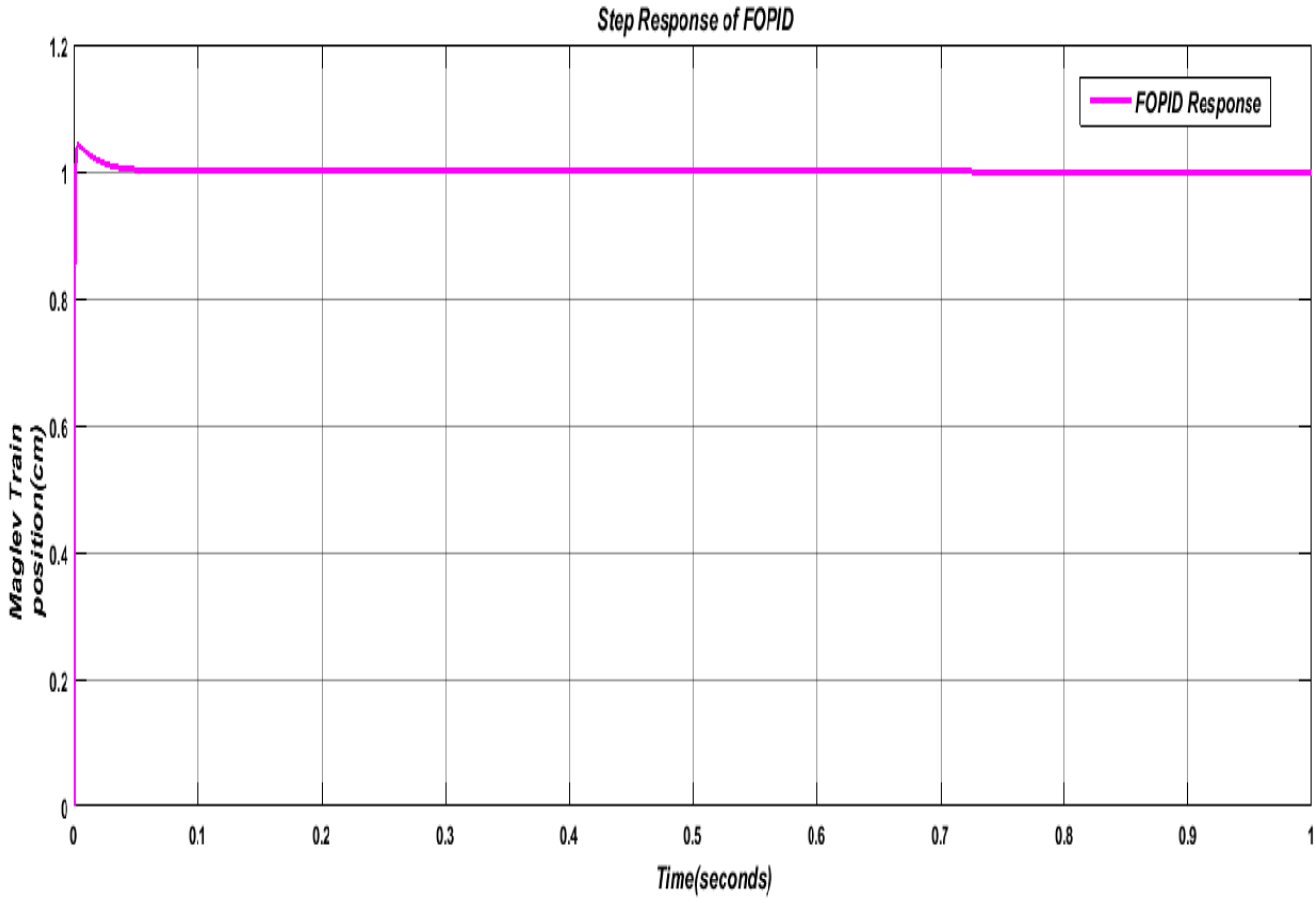

Figure 4.10: Unit step response of FOPID Controller for Maglev train system

Table 4.3: The performance specifications of the Maglev train system controlled by optimal FOPID controller parameters

Performance Characteristics	Optimal Values of FOPID Controller
Rise Time	0.009 second
Settling Time	0.015 second
Overshoot	4.37%
Peak Response	1.043
Steady State Error	0.043

Therefore we can observe (Table 4.3) that designing of a FOPID controller gives better performance of Maglev Train control System relatively compared to conventional PID controller because its performance specifications like overshoot, settling time, rise time and

steady state error is smaller than IO PID controller parameters. Fig.4.11 shows the simulation results for the Maglev Train control using both PID and FOPID controller with a unit step input.

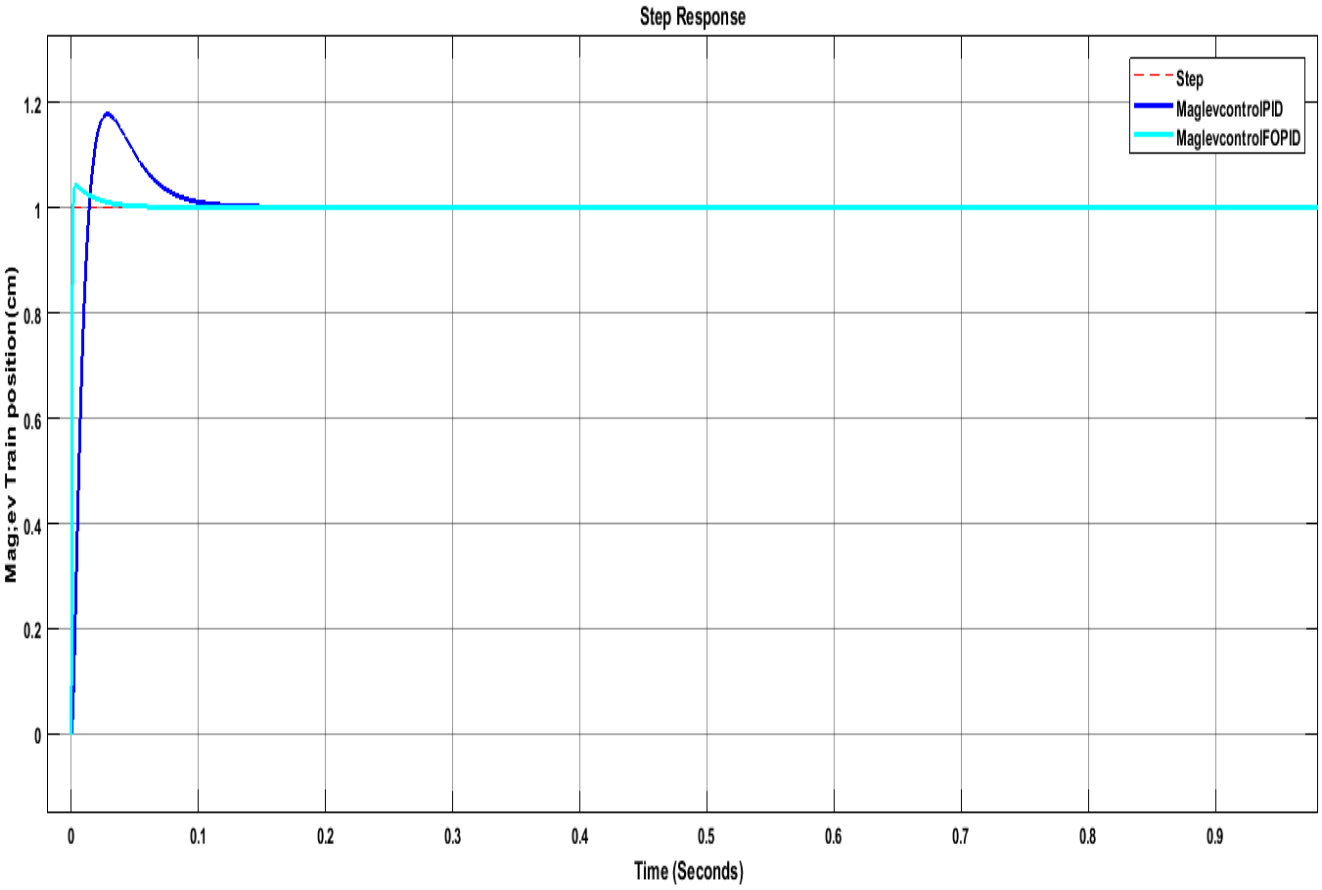

Figure 4.11: Step Response of PID and FOPID for Maglev Train

In this paper, finally a very good controller is designing to determine the exact position control of Maglev Train which is a NN controller. A controller design is based on using MATLAB Graphical user interface. Fig.4.12 shows the MATLAB SIMULINK model for Maglev Train control using NN controller.

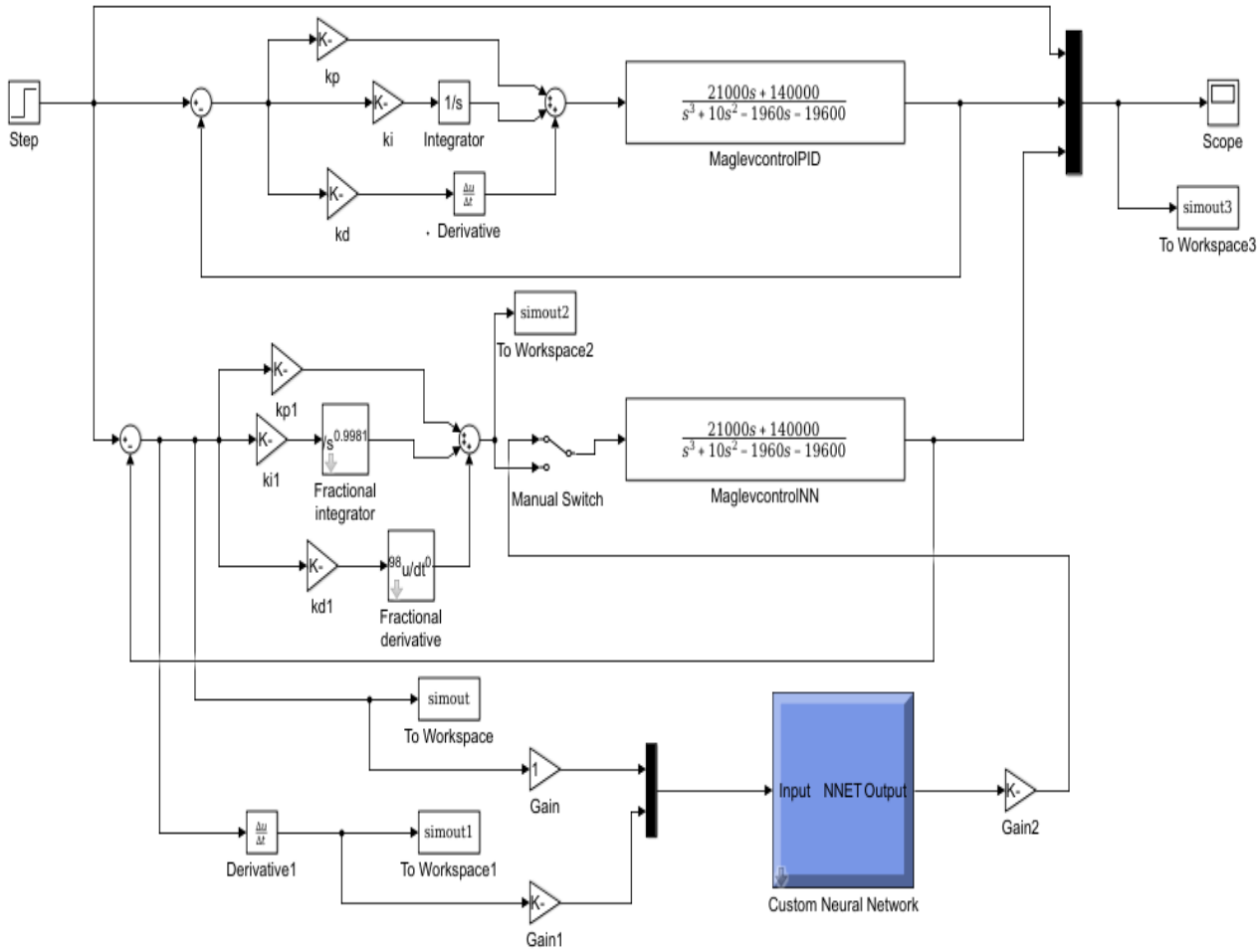

Figure 4.12: SIMULINK Diagram of Maglev Train control using NN Controller.

In this work the Artificial Neural Network controller is use to improve the performance of Maglev system. Now NN is divided into three layers, named the input layer with 2 neurons, the hidden layer with 2 neurons, and the output layer with 1 neuron. Back propagation learning algorithm (Levenberg - Marquardt) is used to train the network. The ANN training data samples are collected from the input and output of FOPID controller. The hidden layer neurons are activated by using tan sigmoid activation function and for the output a pure linear activation function is used. To simulate in MATLAB I follow the following steps of graphical user interface to the toolbox; these steps are:

i. To open the Network window type nnstart.

ii. Select fitting App.

iii. Click next to proceed.

iv. Click Inputs and Targets options to get data from work space respectively and select samples are in matrix rows then click next.

v. The Validate and Test Data window, shown in figure 4.13. The validation and test data sets are each set to 10% and training data set is 80% of the original data, click next.

vi. Select the numbers of hidden neurons click next.

vii. Finally click train and training is continued until optimal results obtained. After training the ANN the regression, error histogram and performance under plots shown in figure below.

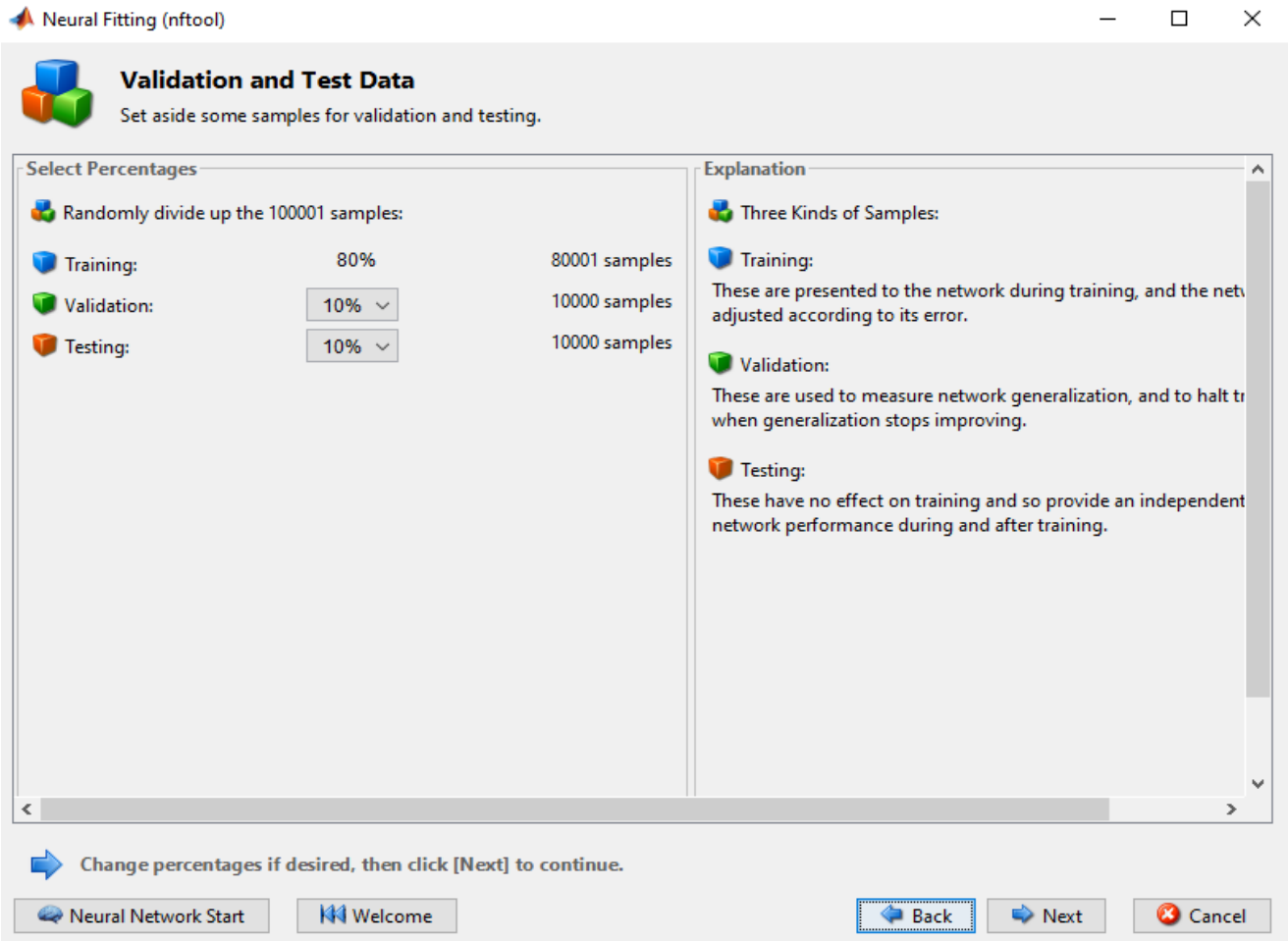

Figure 4.13: Validate and Test Data window

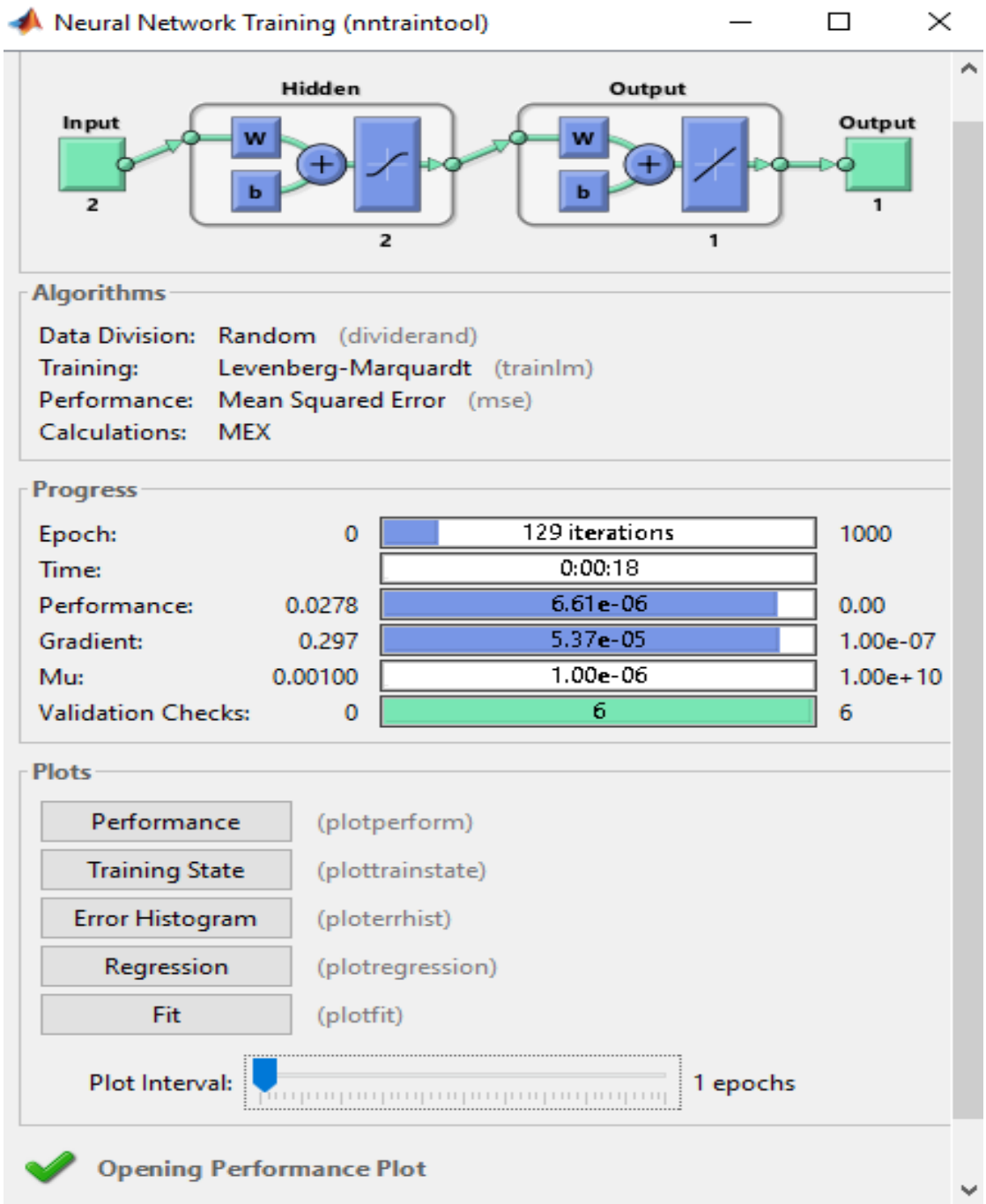

Figure 4.14: NN Training of Maglev system

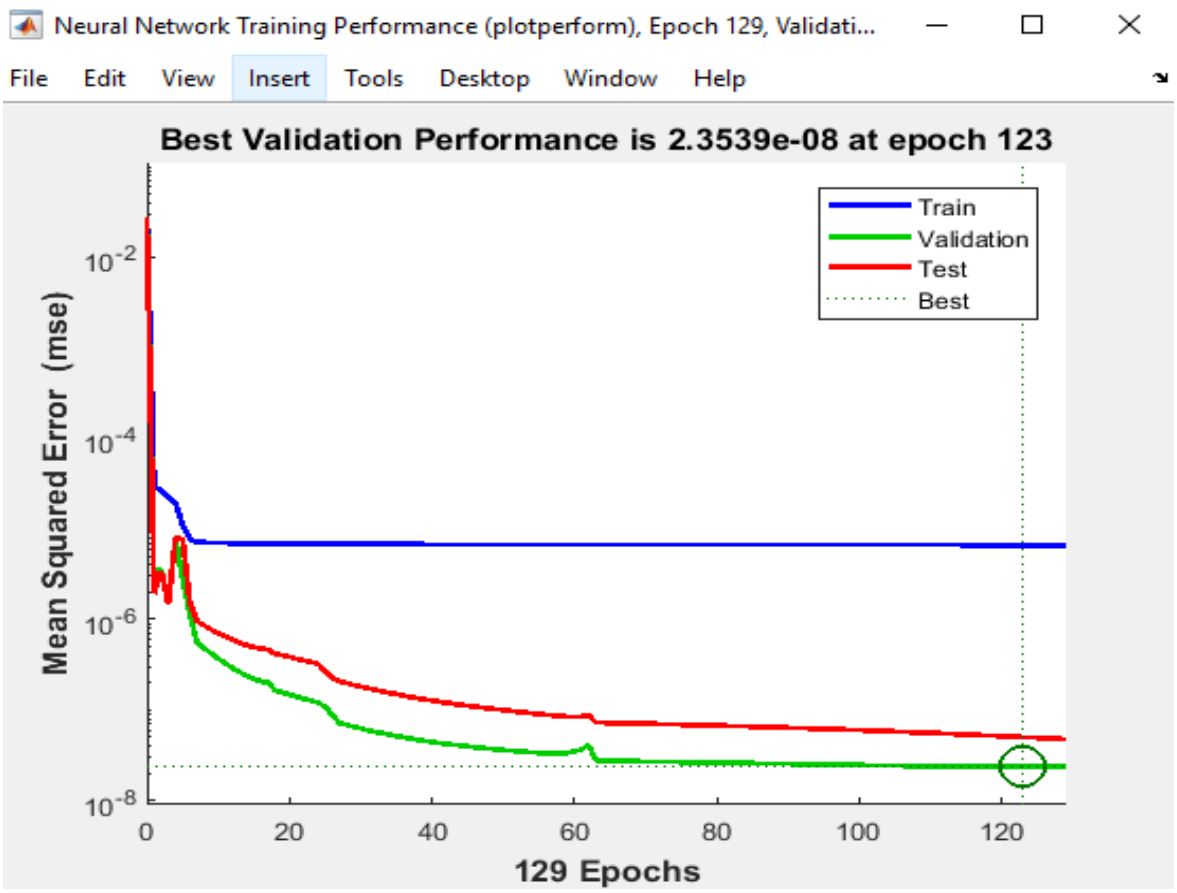

Figure 4.15: NN Training performance

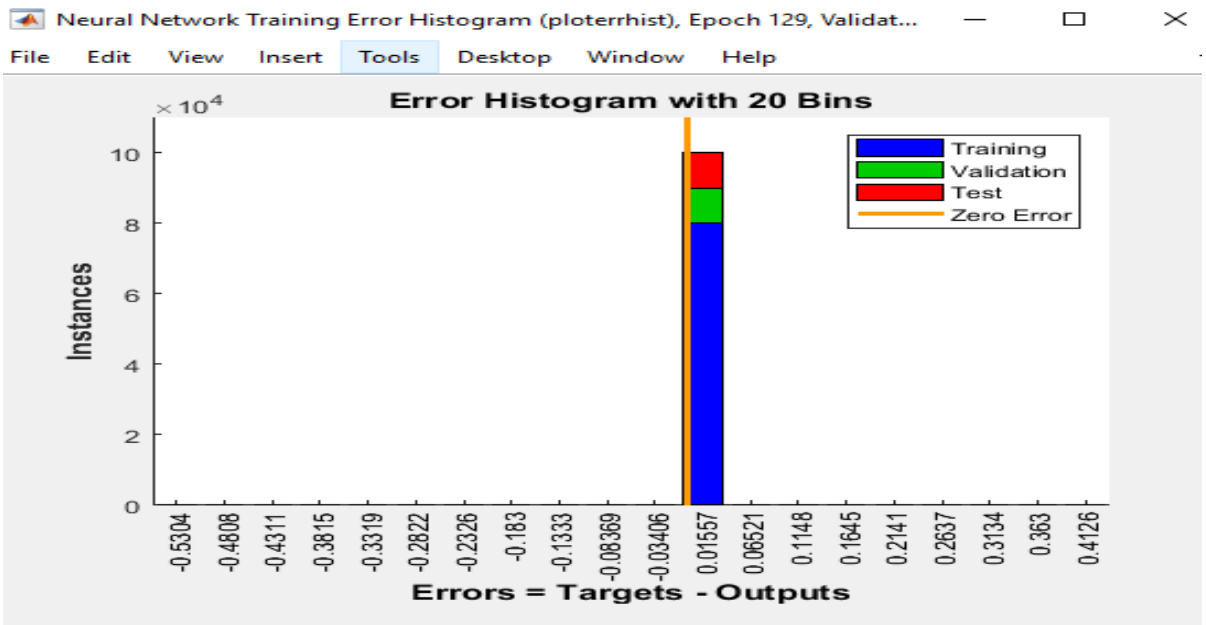

Figure 4.16: NN Training Error Histogram

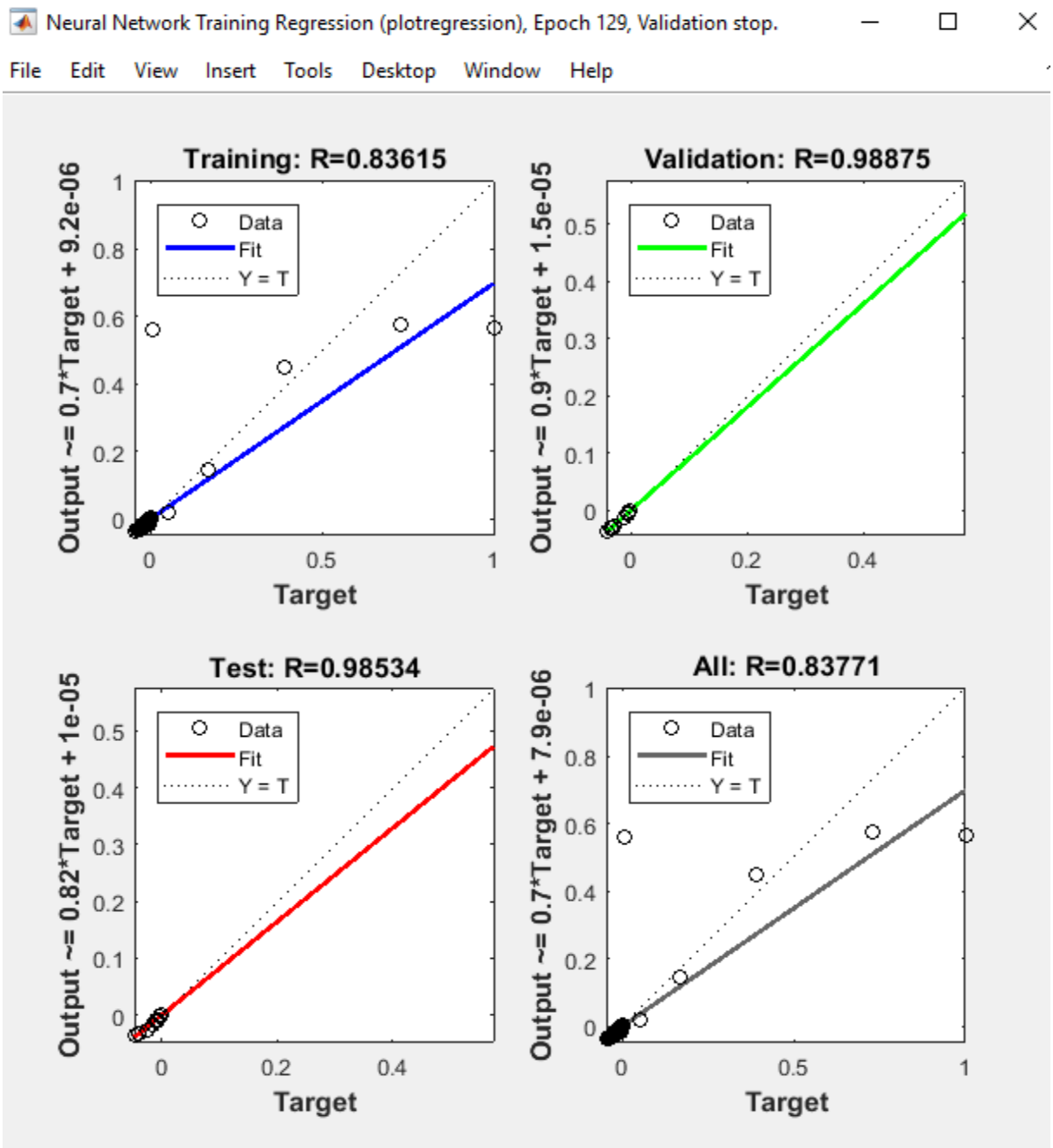

Figure 4.17: NN Training Regression

Using an ANN controller design the simulation result for Maglev Train control system is illustrated in Fig.4.18 with a unit step input.

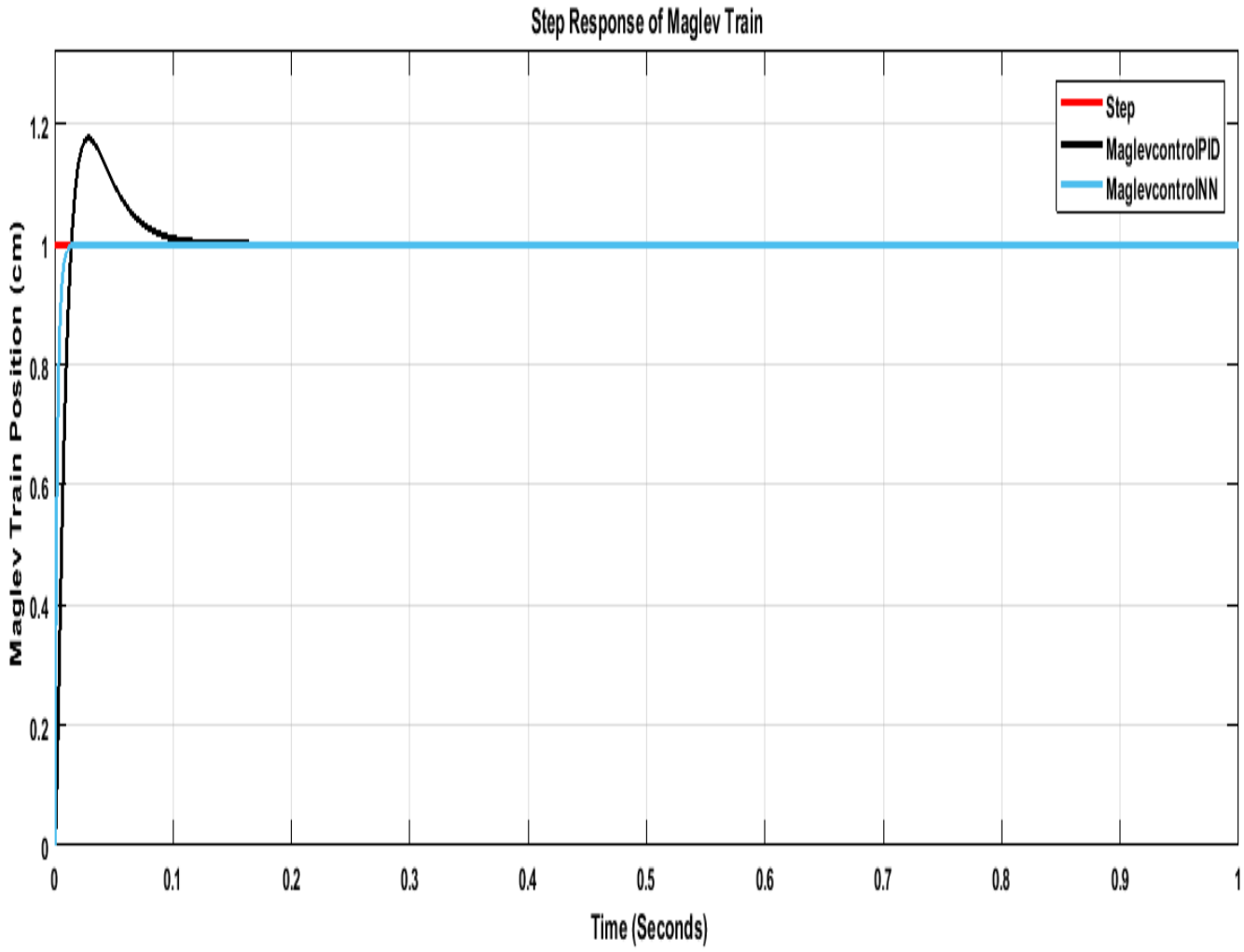

Fig 4.18: Unit Step Response of PID and ANN Controller for Maglev Train

Finally we can observe from the above graph an ANN controller is a powerful controller to stabilize a highly non-linear Maglev Train System when compared to PID and FOPID controller. The conventional PID controller, fractional order PID controller and an artificial NN controller are designed for stabilization of the Maglev Train control system. The performance characteristics are compared in below table.

Table 4.4: Maglev Train performance characteristics using PID controller, FOPID controller and NN controller

Performance characteristics	PID	FOPID	ANN
Rise Time	0.02 Second	0.009 Second	0.0057 Second
Settling Time	0.103 Second	0.015 Second	0.0069 Second
Overshoot	18.452 %	4.37 %	0.864 %
Peak Response	1.184	1.043	1
Steady State Error	0.18	0.043	0

Using ANN controllers, we can observe from the table that a best performance evaluation is obtained when compared to conventional PID and FOPID controller; since having a very small overshoot, rise time, steady state error and settling time.

CHAPTER FIVE

5. CONCLUSION AND RECOMMENDATION

5.1. CONCLUSION

Because of highly nonlinear and open loop unstable of the Maglev Train system, a linear and nonlinear control system is proposed for Maglev Train system. In this paper, first a nonlinear Maglev Train model is linearizied based on Taylor's series mechanism at the equilibrium point to perform a simulation and stability analysis, then a linear proportional derivative control method is suggested to stabilize the right side unstable pole and its open-loop transfer function of the system obtained here is used for the other investigation .To obtain the optimal performance characteristics of Maglev Train a unity feedback linear and non-linear controller is designed respectively. The linear controllers are PID and FOPID controller, using conventional PID controller we can observe that insufficient performance is obtained. Since its adjustable parameter is operating in a limited range .i.e. the integration (λ) and differential (δ) order is set to 1 so to improve the limitations of PID controller a fractional order controller is introduced.

$PI^{\lambda}D^{\delta}$ controller having additional two tunable parameter these parameters gives more flexibility and capability to control Maglev Train system exactly when compared to conventional PID controller. The optimized FOPID Controller parameters are k_p, k_i, k_d, λ and δ with values (10.123, 277.629, 0.099, 0.99811, and 0.99998) respectively to regulate the exact position of Maglev train System. Therefore the superior performance characteristics like overshoot (4.37 %), settling time (0.015 second), steady state error (0.043), rise time (0.009 second) and Peak response (1.043) was obtained by fractional order PID controller. As a final point a non-linear controller is designed to determine the exact position control or stabilization of Maglev Train system. Non-linear controller used in this study was ANN controller and its network topologies is feed forward network; which means network without feedback or delay. The sample data that is used for training is collected from the input and output of FOPID controller. Feed forward network is trained by back propagation algorithm. The sample data that is used for training is collected from the input and output of FOPID controller. In this paper a powerful controller is used to stabilize a highly non-linear Maglev Train system; which is a NN controller having a smaller overshoot (0.864), settling time (0.0069 second), steady state

error (0) and rise time (0.0057 second) values when compared to conventional PID and fractional order PID controller.

5.2. RECOMMENDATIONS

A Maglev Train system is highly nonlinear and open -loop unstable. Stabilization is a difficulty point; to stabilize the system a different controller can be designed. To design an optimal fractional order PID controller further design on FOPID controller by using Particle Swarm Optimization (PSO) may improve Maglev system performance very well.

To conclude, beside the hard-work that is done here regarding the design of fractional order PID and Neural network controller there is still a room for improvement using other tuning methods namely the one mentioned above, the particle swarm optimization.

REFERENCES

[1] G. K. Tandan, P. K. Sen, G. Sahu, R. Sharma, and S. Bohidar, “A Review on Development and Analysis of Maglev,” vol. 3, no. 12, pp. 14–17, 2015.

[2] H. Yaghoubi, “The Most Important Maglev Applications,” vol. 2013, 2013.

[3] N. D. Pandey, M. Kumar, and P. Tiwari, “Analysis of Magnetic Levitation and Maglev Trains,” vol. 3, no. 12, pp. 108–112, 2016.

[4] A. Duka, M. Dul, and S. Oltean, “IMC based PID Control of a Magnetic Levitation System,” vol. 22, no. October 2015, pp. 592–599, 2016.

[5] S. Kr and C. E. Manipal-, “Robust Feedback Control Analysis of Magnetic Levitation System Mathematical Modeling of Mag- netic Levitation System,” vol. 13, no. 4, pp. 285–291, 2014.

[6] M. Junaid, E. Sadaqat, U. Rehman, E. M. Junaid, E. Obaid, and U. Rehman, “Linear Quadratic Regulator controller for Magnetic Levitation System,” no. February, 2015.

[7] “Design & Implementation of Fuzzy Parallel Distributed Compensation Controller for Magnetic Levitation System,” no. August, 2017.

[8] I. Ahmad, “Nonlinear Model & Controller Design for Magnetic Levitation System Nonlinear Model & Controller Design for Magnetic Levitation System,” no. January 2010, 2014.

[9] C. Tyan, P. P. Wang, and D. R. Bahler, “An Application on Intelligent Control Using Neural Network and Fuzzy Logic,” pp. 1–17.

[10] J. J. D. Azzo, C. H. Houpis, and S. N. Sheldon, *Linear control system analysis and design with matlae*. 2003.

[11] R. L. W. Ii *et al.*, *LINEAR STATE-SPACE CONTROL SYSTEMS*. 2007.

[12] A. S. Introduction, “Neural Networks,” 1996.

[13] B. Krose and P. Van Der Smagt, “introduction to Neural,” no. November, 1996.

[14] M. Hajimani, “Neural Adaptive controller for Magnetic levitation system Neural Adaptive Controller for Magnetic levitation System,” no. June 2016, 2014.

[15] A. Mathematics, “ijpam.eu,” vol. 101, no. 2, pp. 289–300, 2015.

[16] S. D. Systems, *Advanced Mechatronics*. .

[17] “DESIGN AND SIMULATION OF NONLINEAR CONTROL SYSTEM FOR Abstract :,” pp. 544–549, 2015.

[18] A. Nayak, “System Department of Electrical Engineering Dedicated to my family and my friends,” 2015.

[19] S. E. Petlenkov, “Faculty of Information Technology Department of Computer Control Fractional-order Calculus based Identification and Control of Linear Dynamic Systems Master thesis,” 2011.

[20] S. Karad, S. Chatterji, and P. Suryawanshi, “Performance Analysis of Fractional Order PID Controller with the Conventional PID Controller for Bioreactor Control,” vol. 3, no. 6, pp. 1–6, 2012.

[21] A. Defence and F. Academy, “N EURAL N ETWORK BASED A DAPTIVE C ONTROL FOR A UTONOMOUS F LIGHT OF F IXED W ING,” no. August, 2008.

[22] “Advanced Control Engineering.”

APPENDICES

Appendix A: MATLABTM Code

```
%% State space model of Maglev Train
A= [0 1 0; 1960 0 -0.14; 0 0 -10];
B= 0; 0; 10];
C= [1 0 0];
D=0;
sys = ss(A, B, C, D);
G = tf(sys) % gives continues-time transfer function of Maglev train
% root locus of uncompensated Maglev Train
rlocus(G)
% open loop step response
Op = step(G)
title (' Step Response')
% transfer function of compensated Maglev train
s = tf('s')
Gc = (21000 * s + 140000)/(s^3 + 10 * s^2 - 1960 * s - 19600)
% root locus of compensated Maglev train
rlocus(Gc)
% Step Response of compensated Maglev system
sys = feedback(GC, 1)
step(sys)
```

```
stepinfo(sys)  % step response characteristics
% to design PID controller use simulink and tune automatically until to reach optimal values
fotf_gui  % to design FOPID controller
%% sample data is collected for training from the input and output of FOPID controller
input=simout.signals.values;
input1=simout1.signals.values;
target=simout2.signals.values;
k1=max (input);
k2=max (input1);
k3=max (target);
int= [input/k1 input1/k2];
out= [target/k3];
nnstart % neural network training and design by using graphical interface
```