

ADDIS ABABA UNIVERSITY
COLLEGE OF EDUCATION AND LANGUAGE STUDIES
DEPARTMENT OF SPECIAL NEEDS AND INCLUSIVE EDUCATION

Inclusion of Students with Disabilities in Primary Schools of Addis Ababa: Teachers' Perspectives on Culture, Policies, and Practices

A Doctoral Dissertation

By

Tesaka Mebratu Zegeye

Advisors:

Professor Alemayehu Teklemariam (Main Advisor)

Dr. Tilahun Achaw (Co-Advisor)

Addis Ababa University
Addis Ababa, Ethiopia
March, 2026

ADDIS ABABA UNIVERSITY
SCHOOL OF GRADUATE STUDIES
COLLEGE OF EDUCATION AND LANGUAGE STUDIES
DEPARTMENT OF SPECIAL NEEDS AND INCLUSIVE EDUCATION

Inclusion of Students with Disabilities in Primary Schools of Addis Ababa: Teachers' Perspectives on Culture, Policies, and Practices

Tesaka Mebratu Zegeye

A Dissertation Submitted to the Department of Special Needs and Inclusive Education Presented in Fulfilment of the Requirements for the Degree of Doctor of Philosophy in Special Needs Education

Addis Ababa University
Addis Ababa, Ethiopia
March, 2026

ADDIS ABABA UNIVERSITY
SCHOOL OF GRADUATE STUDIES
COLLEGE OF EDUCATION AND LANGUAGE STUDIES
DEPARTMENT OF SPECIAL NEEDS AND INCLUSIVE EDUCATION

Inclusion of Students with Disabilities in Primary Schools of Addis Ababa: Teachers' Perspectives on Culture, Policies, and Practices

A Doctoral Dissertation

By

Tesaka Mebratu Zegeye

Approved by the Board of Examiners

_____	_____	_____
Chairman, Dep. Graduate Committee	Signature	Date
_____	_____	_____
Advisor	Signature	Date
_____	_____	_____
Examiner (Internal)	Signature	Date
_____	_____	_____
Examiner (External)	Signature	Date

Declarations

I dedicate this doctoral journey, and the dissertation it has produced, to my beloved parents: my father, Ato Mebratu Zegeye, and my mother, W/o Tiru Maru. They were the first to believe in me, the first to send me to school, and the first to give me an opportunity they themselves were denied. I remain deeply grateful for the sacrifices they made to nurture my future and to help me realize my childhood dream of becoming a scholar.

As my parents often told me, even when I was a toddler, while being carried on my mother's back, I seemed to sing "ሀ፣ ለ፣ ሀ፣ ለ፣…," which they took as an early sign of the path I would one day pursue.

Long live, Ayiwey and Etatey!!

DECLARATIONS

I, undersigned, declare that this doctoral dissertation entitled: **Inclusion of Students with Disabilities in Primary Schools of Addis Ababa: Teachers' Perspectives on Culture, Policies, and Practices** - is entirely my research project towards the partial fulfillment of the requirements for the degree of Doctor of Philosophy in Special Needs Education. The dissertation has not been previously submitted by the researcher in either in part or whole in any other universities, or elsewhere for the award of any degree or diploma. Any of the referenced materials or written sources in the research report are duly acknowledged and credited as being sourced from other researchers, authors, or writers in the reference section.

Tesaka Mebratu

Signature: _____

Date: March, 2026

Addis Ababa, Ethiopia

CERTIFICATION

I, hereby, certify that the dissertation entitled: **Inclusion of Students with Disabilities in Primary Schools of Addis Ababa: Teachers' Perspectives on Culture, Policies, and Practices** - submitted to the Department of Special Needs and Inclusive Education by Tesaka Mebratu for the award of the degree of Doctor of Philosophy in Special Needs Education is carried out under my professional guidance and supervision. The entire thesis or a part of it has not been previously submitted for the award of any degree or diploma in other higher education institutions.

Professor Alemayehu Teklemariam (PhD)
Dissertation Principal Advisor
Department of Special Needs and Inclusive Education
Addis Ababa University
Signature: _____
Date: March, 2026

ACKNOWLEDGEMENTS

First and foremost, I thank God for giving me the strength and opportunity to achieve my lifetime dream of earning a Doctor of Philosophy (PhD) degree.

It is my heartfelt pleasure to express my deep and sincere gratitude to my principal supervisor, Professor Alemayehu Teklemariam (PhD), whose unwavering dedication, generous support, and wise scholarly guidance were instrumental in the successful completion of this study. His continuous encouragement, insightful and constructive feedback, and meticulous supervision guided me at every stage of the research journey. I feel truly honored and fortunate to have worked under such an exceptional mentor. Your guidance not only shaped this work but also enriched my academic growth.

My sincere appreciation also goes to my co-advisor, Dr. Tilahun Achaw (Assistant Professor), for his consistent encouragement, professional support, and warm, approachable manner. His readiness to offer guidance, along with his thoughtful suggestions and useful comments, greatly enriched this study. I am truly grateful for his valuable academic insight and the positive spirit he brought throughout this journey.

I owe my deepest appreciation and gratitude to my loving wife, Dr. Rahel Sisay, and our children, Tison, Eyob, Hiwot, and Luel, for their patience, understanding, and unwavering support throughout this journey. My wife's motivation, thoughtful professional dialogue, and continuous intellectual contributions were vital sources of strength and knowledge for me, while the joy and encouragement of my children gave me renewed energy and enthusiasm throughout this journey.

I would also like to extend my sincere appreciation to Woldia University, my home institution and sponsor, for giving me the opportunity and institutional support to pursue my doctoral study.

My gratitude goes to the study participants for their willingness to participate and generously sharing their time and experiences during data collection. Without their valuable contributions, this study would not have taken its present form.

Finally, I remain grateful to all whose contribution, directly or indirectly to the completion of this dissertation. Your support are highly appreciated and will forever be remembered.

TABLE OF CONTENTS

Contents

DECLARATIONS i
CERTIFICATION iii
ACKNOWLEDGEMENTS iv
TABLE OF CONTENTS v
LIST OF TABLES viii
LIST OF FIGURES ix
LIST OF ACRONYMS AND ABBREVIATIONS x
ABSTRACT xi

CHAPTER ONE: INTRODUCTION 1
1.1. Background of the Study 1
1.2. Statement of the Problem 6
1.3. Objectives of the Study 10
1.4. Significance of the Study 11
1.5. Scope of the Study 13
1.6. Operational Definition of Key Terms 14
1.7. Organization of the Dissertation Report 17

CHAPTER TWO: REVIEW OF LITERATURE 18
2.1. Conceptualizing Inclusive Education and Disability 18
2.1.1. Defining Inclusive Education: Core Concepts 19
2.1.2. Understanding Disability in School Contexts: Conceptual Models and Educational Implications 21
2.2. From Segregation to Inclusion: Global and National Trajectories 24
2.2.1. Global Evolution from Segregation to Inclusion: Key Milestones and Debates 25
2.2.2. Ethiopia's Transition toward Inclusion for Students with Disabilities 30
2.3. Dimensions of Inclusive Education Implementation in Primary Schools 31
2.3.1. Inclusive School Culture (ISC): Concept and Core Features 32
2.3.1.1 Building Community for Students with Disabilities 35
2.3.1.2 Establishing Inclusive Values for Students with Disabilities 38
2.3.1.3 Manifestations and Challenges of Inclusive School Culture 42
2.3.2. Inclusiveness of School Policy (ISP): Concept and Policy Enactment 44
2.3.2.1. Policy Foundations for Inclusive Education in Ethiopia: International and National Frameworks 46
2.3.2.1.1. International Policy Frameworks Promoting Inclusive Education 47
2.3.2.1.2. Ethiopia's Legal and Policy Frameworks for Promoting Inclusive Education 48
2.3.2.2. Policy Awareness and Implementation for Inclusion 62
2.3.2.3. Organizing Support for the Inclusion of Students with Disabilities 64
2.3.2.4. Manifestations and Challenges of Inclusiveness of School Policy 65
2.3.3. Inclusive School Practices (ISPr): Concept and School Routines 66
2.3.3.1. Teaching–Learning Practices for Inclusion 67
2.3.3.2. Resource Provision Practices for Inclusion 68
2.3.3.3. Manifestations and Challenges of Inclusive School Practices 69
2.4. Teachers' Perspectives on Inclusive School Culture, Policy, and Practice 71
2.4.1. Teachers' Views on Inclusive School Culture 72
2.4.2. Teachers' Views on Inclusive Policy as an Enabling or Constraining Infrastructure 73
2.4.3. Teachers' Views on the Enactment of Inclusive Practices 73
2.5. Structural and Mediating Relationships Among Culture, Policy, and Practice 74
2.5.1. Interdependence of Culture, Policy, and Practice 75

2.5.2. Direct Culture–Practice Pathways 75
2.5.3. Policy as a Mediator Between Culture and Practice 76
2.6. Theoretical Framework of the Study 76
2.6.1. Theoretical Models of Disability (Medical, Social, and Biopsychosocial) 77
2.6.2. The Index for Inclusion as the Organizing Framework for Culture, Policy, and Practice 81
2.6.3. Bronfenbrenner's Bioecological Model: Multi-Level Influences on Teachers and Schools 83
2.7. Conceptual Framework of the Study 85

CHAPTER THREE: **METHODOLOGY** 88
3.1. Philosophical Assumptions 88
3.2. The Rationale for Using Mixed Method Designs 91
3.3. Research Design 93
3.4. Target Population 95
3.5. Sample and Sampling Technique 96
3.6. Data Collection Instruments 103
3.6.1. Conceptualization of Study Constructs 103
3.6.2. Survey Instrument Development 104
3.6.3. Qualitative Data Collection Instruments 109
3.7. Data Collection Procedures 116
3.8. Data Screening and Preliminary Assessment of SEM Assumptions 118
3.9. Factor Structure and Measurement Validation 120
3.9.1. Exploratory Factor Analysis (EFA) 120
3.9.2. Confirmatory Factor Analysis (CFA) 121
3.9.3. Reliability and Validity Analysis 124
3.10. Data Analysis Method 126
3.11. Ethical Considerations 129

CHAPTER FOUR: RESULTS 130
4.1. Quantitative Findings: Phase I 130
4.1.1. Demographic Characteristics of the Respondents 130
4.1.2. Levels of Inclusive School Culture, Policy, and Practice 131
4.1.2.1. Levels of Teachers' Perceptions of the Inclusiveness of School Culture 132
4.1.2.2. Levels of Teachers' Perceptions of the Inclusivity of School Policy 136
4.1.2.3. Levels of Teachers' Perceptions of Inclusivity of School Practice 139
4.1.3. Group Differences in Inclusive School Culture, Policy, and Practice 142
4.1.4. Structural Equation Modeling (SEM) Analysis 152
4.1.4.1. Confirmatory Factor Analysis (Measurement Model Evaluation) 152
4.1.4.2. First-Order Measurement Model Testing 154
4.1.4.2.1. Conceptual Specification of the First-Order Measurement Model 154
4.1.4.2.2. Assessment of the First-Order Measurement Model 155
4.1.4.3. Higher-Order Measurement Model Testing 171
4.1.4.1.2.1. Specification of the Second-Order Measurement Model 171
4.1.4.2.2. Higher-Order Path Coefficients and Construct Validity 178
4.1.4.4. Summary of the CFA Measurement Models 182
4.1.4.5. Structural Relationships among Inclusive School Culture, Policy, and Practice 184
4.1.4.5.1. Analysis of Structural Paths and Indirect (Mediation) Effects 186
4.1.4.5.2. Direct structural relationships among ISC, ISP, and ISPr 186
4.1.4.5.3. Indirect (mediation) effects of ISC on ISPr via ISP 188
4.2. Qualitative Findings: Phase II 190
4.2.1. Organization, Context, and Approach 190
4.2.2. Inclusive School Culture 190

4.2.3. Inclusiveness of School Policy 206
4.2.4. Inclusive School Practices 224
4.2.5. Cross-domain integration (C–P–P): conditional inclusion as a system-student mismatch pattern . 242

CHAPTER FIVE: **DISCUSSION** 245
5.1. Analytical Orientation: An Integrated Interpretive Framework 245
5.2. Theoretical Framing of the Integrated Interpretation 246
5.3. Inclusive School Culture: Normatively Affirmed yet Institutionally Fragile—Conditional Enactment 250
5.3.1. The Core Cultural Paradox 250
5.3.2. Building Community: Relational Commitment amid Fragile Belonging 252
5.3.3. Establishing Inclusive Values: Normative Endorsement under Structural Dilution 255
5.3.4. Inclusive Culture as Symbolic Legitimacy without Structural Embedding 257
5.4. Inclusive School Policy: Formally Articulated yet Weakly Institutionalized—Fragmented Policy-to-Practice Translation 258
5.4.1. Policy as the Critical (Yet Failing) Mediating Layer 258
5.4.2. Policy Awareness and Implementation: Formal Recognition amid Operational Ambiguity 259
5.4.3. Organizing Support: Structural Provision amid Systemic Fragmentation 262
5.4.4. Policy as Bottleneck, Not Bridge 263
5.5. Inclusive School Practices: Pedagogical Agency in Structural Constraint 265
5.5.1. Practice as the Point of Systemic Failure 265
5.5.3. Resource Provision: The Materialization of Inequality 268
5.5.4. Operational Enactment under Instructional and Material Constraint—Fragile Stabilization of Participation 270
5.6. The Stabilizing Role of Routinization: What Holds Under Pressure across Domains 271
5.7. Integrated Interpretation of Structural and Mediating Relationships in Theoretical Context 273
5.8. Interpreting Demographic Patterns: A Diagnostic Analysis of Systemic Capacity 276
5.9. Cross-Phase Synthesis: Conditional Inclusion as a System–Student Mismatch 280
5.9.1. The Core Contradiction 280
5.9.2. The Vicious Cycle of Conditional Inclusion 281
5.9.3. The Overarching Meta-Inference 283

C**HAPTER SIX**: **SUMMARY, CONCLUSIONS, AND RECOMMENDATIONS** 285
6.1. Summary of the Study and Major Findings 285
6.2. Conclusions and Implications of the Study 288
6.3. Recommendations 294
6.4. Limitations and Further Research 299
6.5. Concluding Reflection 301

REFERENCES 302
APPENDICES 347

LIST OF TABLES

Table 3.1. Sample of teachers within each three sub-cities and 12 Public Primary schools ……98
Table 3.2. The Distribution of Sample Teachers by Demographic Variables …….. 99
Table 3.3. Summary of Teachers' survey questionnaire Content Validity Index …… 105
Table 3.4. Sources and Scope of Documents Reviewed and their Analytical Purpose ……... 112
Table 4. 2. One-sample t-test statistics for teachers' perceptions of ISC for SWDs ……... 132
Table 4. 3. One-sample statistics for teachers' perceptions of ISP for SWDs ……. 135
Table 4. 4. One-sample statistics for teachers' perceptions of ISPrs for SWDs …….. 138
Table 4.5. Independent t-test results for teachers' perceptions of ISC, ISP, and ISPr by gender ..….. 142
Table 4.6. Independent t-test results for teachers' perceptions of ISC, ISP, and ISPr by educational qualification ……. 144
Table 4.7. One-way ANOVA for teachers' perceptions of ISC, ISP, & ISPr by age ...…….. 145
Table 4.8. One-way ANOVA for teachers' perceptions of ISC, ISP, & ISPr by total teaching experience……. 146
Table 4.9. One-way ANOVA for teachers' perceptions of ISC, ISP, & ISPr by specific experience of teaching SWDs...……... 148
Table 4.10. One-way ANOVA for teachers' perceptions of ISC, ISP, and ISPr by perceived severity of students' disabilities …….. 149
Table 4.17. Factor Correlation Matrix for First-Order Constructs in the Revised Lower-Order CFA Model ……..…… 166
Table 4.18. Discriminant Validity Matrix for First-Order Constructs (AVE vs. Squared Correlations) ……... 168
Table 4.21.Unstandardized Regression Weights of the Revised Higher-Order CFA Measurement Model ……..…… 169
Table 4.24. Discriminant Validity Matrix for Higher-Order Constructs (AVE vs. Squared Correlations) ……..…….. 180
Table 4.25. Structural Path Estimates for the Higher-Order Structural Model (Standardized Direct Effects) ……. 186
Table 4.26. Bootstrapped Indirect Effect of ISC on ISPrs via ISP ……..…… 187

LIST OF FIGURES

Figure 2.1 Conceptual framework of the study …… 87
Figure 3.1 Shows a visual illustration of the study's sequential explanatory mixed study design …… 94
Figure 4.1a. Hypothesized First-Order CFA model ……. 154
Figure 4.1b. Revised First-Order CFA Mode, Displaying Standardized Estimates …… 156
Figure 4.2a. Hypothesized Higher-Order Measurement Model of ISC, ISP & ISPr for SWDs …..... 172
Figure 4.2b. Revised Higher-Order CFA Model of ISC, ISP and ISPr for SWDs …….. 173
Figure 4.3. Structural Interrelationships among Teachers' Perceptions of ISC, ISP & ISPr for SWDs (SEM model) ……..…….....…….. 184

LIST OF ACRONYMS AND ABBREVIATIONS

AACA	Addis Ababa City Administration Education Bureau
AACAEB	Addis Ababa City Administration Education Bureau
AAU	Addis Ababa University
BC	Building Community
CD	Curriculum Differentiation
CFA	Confirmatory Factor Analysis
CRPD	Conventions on the Rights of Persons with Disabilities
C-P-P	Culture–Policy–Practice
CWDs	Children with Disabilities
EAHCA	Education for All Handicapped Children Act
EFA	Exploratory Factor Analysis
EIV	Establishing Inclusive Values
ESDP	Education Sector Development Programme
ETPs	Education and Training Policies
FDRE	Federal Democratic Republic of Ethiopia
FAPE	Free Appropriate Public Education
GEQIP	General Education Quality Improvement Program
ICF	International Classification of Functioning, Disability and Health
IERC	Inclusive Education Resource Center
IEP	Individualized Education Programme
ISC	Inclusive School Culture
ISP	Inclusive School Policy
ISPr	Inclusive School Practice
KII	Key Informant Interview
LRE	Least Restrictive Environment
MMD	Mixed Methods Designs
MoE	Ministry of Education
PAI	Policy Awareness and Implementation
PWDs	Persons with Disabilities
OS	Organizing Support
RP	Resource Provision
SEM	Structural Equation Modeling
SNE	Special Needs Education
SNIE	Special Needs/Inclusive Education
SWDs	Students with Disabilities
TL	Teaching-Learning
UDL	Universal Design for Learning
UN	United Nations
UNDESA	United Nations Department of Economic and Social Affairs
UNICEF	United Nations International Children's Emergency Fund
UNESCO	United Nations Educational, Scientific and Cultural Organization
WHO	World Health Organization

ABSTRACT

In this study, teacher perspectives regarding inclusive school culture, policies, and practices for the inclusion of students with disabilities (SWDs) in public primary schools of Addis Ababa, Ethiopia, were investigated. This study was prompted by persistent worries that, although governments have made promises toward inclusive education, their implementation at the school level is still inadequate. The study aimed to examine the inclusivity of school culture (ISC), policy (ISP), and practice (ISPr) in selected public primary schools of Addis Ababa from teachers' perspectives, treating these dimensions as interrelated rather than as separate. An explanatory sequential mixed-methods design was employed. Quantitative data were collected from 424 teachers selected through stratified random sampling from 12 public primary schools in Addis Ababa using a survey questionnaire. Qualitative data were gathered through focus group discussions with teachers, semi-structured interviews with Inclusive Education Resource Center coordinators, structured non-participant observation of school accessibility and inclusive education resources, and document review of school-level institutional frameworks. Quantitative data were analyzed using one-sample t-test, independent samples t-test, one-way ANOVA, and SEM, while qualitative data were analyzed thematically. The findings revealed a statistically significant low level of teachers' perceptions of ISC, ISP, and ISPr in relation to the inclusion of SWDs. SEM showed statistically significant direct relationships among the three dimensions: ISC significantly predicted ISP and ISPr, and ISP significantly predicted ISPr. ISC explained 37.1% of the variance in ISP, while ISC and ISP jointly explained 72.3% of the variance in ISPr. Bootstrapped mediation analysis further indicated that ISP partially mediated the relationship between ISC and ISPr. Findings from qualitative data revealed that ISC was institutionally fragile despite its affirmation through norms, ISP was formally recognized but poorly translated to practical processes at the school level, and ISPr was highly inconsistent and institutionally fragile, being overly dependent on individual teacher efforts without routine system interventions. Concluding remarks from this study reveal that inclusion of SWDs in public primary schools of Addis Ababa is still largely aspirational because of poor translation of inclusion intentions to routine school practices and adequate material support. Recommendations from this study focus on implementing policy frameworks and communications, institutionalization of inclusive routines by schools, and resource availability.

CHAPTER ONE

INTRODUCTION

1.1.Background of the Study

In itself, disability is an inherent component of human diversity; nevertheless, its meaning and implications in education are created in particular institutional and policy frameworks. It is known that over one billion individuals, roughly 15% of the global population, are categorized as disabled, with between 110 and 190 million having severe limitations in their activities (Cieza et al., 2021). Over 80% of such persons reside in low and middle-income nations, where education policies tend to face financial constraints, weak institutional capacities, and fragmented policy implementation (Amaratunga et al., 2023; Iemmi et al., 2016; Njelesani et al., 2012). In children and adolescents, 291 million have disabilities globally; the number depends on the criteria used and how they are calculated (Olusanya et al., 2020; Olusanya et al., 2022). More than half of children with disabilities (CWDs) are from sub-Saharan Africa and South Asia, which is attributable to various risk factors, such as poor socioeconomic conditions, violence, poverty, and limited healthcare and education infrastructures in these regions (Olusanya et al., 2022). The statistics above reveal that inclusive education is not only important to ensure access to education but also a major issue in low-income countries where educational exclusions are institutionally entrenched (UNESCO, 2017).

However, despite their large numbers, CWDs tend to suffer from overlapping poverty, discrimination, and exclusion that limit their access to fundamental services such as schooling (Hayes & Bulat, 2017). According to UNICEF, in developing countries, approximately 90 percent of CWDs have never attended any form of education, suggesting a failure by the system to reach out to CWDs and provide them with appropriate support to access education (UNICEF, 2014). Furthermore, students with disabilities (SWDs) are more prone to repetition or dropout even when

they attend schools because classroom pedagogy, testing (or assessment) procedures, and school routines (or policies) are not modified to cater to different kinds of learners.

In the past, CWDs were officially excluded from general education through discriminatory policies, inaccessible settings, and a deficit-oriented view of teaching (Kanter, 2017; Nighswander & Blair, 2022). Initial interventions were guided by the Medical Model of Disability, which viewed disability as a personal problem that required either treatment or correction (Oliver, 1996; Shakespeare, 2006). This approach justified segregation and placed these groups as passive patients who required medical attention. In Ethiopia, this approach led to the creation of specialized schools and interventions in the health sector, while maintaining segregation between general education and disability support (Tirussew, 2006). Later attempts to integrate individuals into education were a step towards change but fell short because integration was not accompanied by appropriate training for teachers, modifications in curriculum, or services needed to facilitate inclusion (Hayes & Bulat, 2017; Mathias, 2015; UNESCO, 2018; Vyas & Bano, 2015).

Inclusive education is one example of an educational phenomenon that stems from a shift from deficit- to rights-based and socially constructed understandings of disabilities. Based on the Social Model of Disability, inclusion is viewed as being hindered by environmental, organizational, and attitudinal barriers, rather than impairments experienced by people (Barnes & Mercer, 2010; Oliver, 1990). The responsibility for ensuring inclusion moves from individuals to institutions that are tasked with creating conditions for inclusion in terms of their organizational, pedagogical, and social practices. Thus, inclusive education implies providing learners with opportunities to actively participate in academic and social contexts via responsive curricula, accommodating environments, and inclusive pedagogical approaches (Elsheikh, 2023; Simón et al., 2021). Such a change in attitude was codified via policy statements such as the Salamanca Statement (UNESCO, 1994), the United Nations Convention on the Rights of Persons with Disabilities (UNCRPD, 2006), and Sustainable Development Goal (SDG) 4 (UNESCO, 2015). Even though those documents set inclusive education as a legal and moral imperative, they do not determine the level of its implementation at the organizational and classroom levels.

In order to explore these dynamics within the educational institution, this study uses the Index for Inclusion model put forward by Booth and Ainscow (2000, 2002, 2011). The notion of inclusion

under the Index for Inclusion model is measured through its three dimensions, namely inclusive school culture (ISC), inclusive school policy (ISP), and inclusive school practice (ISPr), which work independently of each other but simultaneously as well. One of the key assumptions underpinning this theory-informed framework is that of co-evolution, according to which sustainable inclusion requires mutual reinforcement among these three dimensions.

Inclusive school culture refers to the deep-rooted beliefs, attitudes, and value systems that foster a safe, accepting, collaborating, and welcoming school community (Booth & Ainscow, 2002, 2011). It embraces the shared inclusive values and collaborative relationships that direct the school community toward a common goal (Azorín & Ainscow, 2020; McMaster, 2012). Inclusive school policies are concerned with how the school is run and plans to change – including clear aims for advocating inclusion in school plans, programs, admission and placement procedures, accessibility (infrastructure and physical arrangements), and governance mechanisms that coordinate diversity support (Booth & Ainscow, 2011). Inclusive practices refer to the development of what is taught, how it is taught and learned, and what actually goes on in the school, to reflect inclusive cultures and policies (Booth & Ainscow, 2011). Teachers are crucial in promoting inclusion, as they are ultimately responsible for designing and enacting improvements in their classrooms and school culture (Perez, 2014).

To link the school-level dynamics to the wider social settings, another important theoretical framework adapted in this investigation is the Bioecological Systems Theory formulated by Urie Bronfenbrenner (Bronfenbrenner, 1979; Bronfenbrenner & Morris, 2006; Darling, 2007; Neal & Neal, 2013). This theory defines educational dynamics in relation to environmental systems (microsystems, mesosystems, exosystems, and macrosystems) that affect educational practice through their interactions with individuals and organizations. The Bioecological Systems Theory facilitates the analysis of inclusive education practices about the larger social setting of Ethiopia, taking into account the interrelations among culture, institutions, and policy environment in determining the achievement of inclusive schooling (Schiemer, 2017; Teferra, 2005; Yorke et al., 2022). Both the Index for Inclusion and the Bioecological Systems Theory help to analyze the complex relationships involved in the process of achieving inclusion.

Drawing from this theoretical base, more and more studies have been conducted around the world using the three-pronged approach of culture, policy, and practices that focus on the facilitators and inhibitors to inclusion in education. Empirical studies done in the United Arab Emirates (Alborno, 2017; Alborno & Gaad, 2014), Indonesia (Budiarti & Sugito, 2018), Brazil (Menino-Mencia et al., 2019; Sebastian-Heredero & Anache, 2020), China (Tan, 2014), Chile (Figueroa et al., 2016), Spain (Azorín-Abellán, 2018; Fiuza-Asorey et al., 2021; Moliner et al., 2011), Greece (Pappas et al., 2018), Norway (Nes, 2009), Sweden (Lüddeckens et al., 2021), and Kosovo (Zabeli & Gjelaj, 2020) have consistently found that school cultures, policies, and practices are the most significant concerns for exploring hurdles and enablers of movement toward inclusive education. In particular, Zabeli and Gjelaj (2020) examined the attitudes of teachers, students, and parents across the three dimensions, demonstrating that teacher perceptions are a valid and critical lens for assessing alignment among culture, policy, and practice.

However, the influence of these three dimensions is not always uniform. In a quantitative study of inclusive schools in South Kalimantan, Indonesia, Amka et al. (2023) found that while developing inclusive practices had a significant effect on the quality of inclusive education, creating inclusive cultures and producing inclusive policies did not – suggesting that the co-evolution principle may be context-dependent. This reinforces the need to examine teachers' perceptions of how these dimensions interact, specifically within Ethiopian primary schools.

Turning to the Ethiopian context, the country has formally endorsed international commitments through successive Education Sector Development Programs (ESDPs), particularly from ESDP III (2005/06–2010/11) through ESDP VI (2020–2025), alongside the National Inclusive Education Strategy (MoE, 2012b; 2022), and the 10-year Master Plan for Special Needs/Inclusive Education in Ethiopia (2016-2025). These frameworks signal strong national intent. However, the resulting policy–practice gap, particularly at the level of primary schools, remains insufficiently documented.

Regarding what is known from local empirical research, several Ethiopian studies have examined aspects of inclusive education. Some have focused on policy issues (Franck & Joshi, 2017; Lewis, 2009; Belay et al., 2015), documenting gaps between national commitments and school-level implementation. Others have concentrated on practices (Getachew, 2019; Mulat & Sileshi, 2020;

Dagnew, 2013, cited in Mergia, 2020; Aderie, 2016; Alemayehu, 2019; Teketel, 2017; Wondwosen et al., 2014), consistently identifying inadequate teacher training, inaccessible physical environments, limited instructional adaptation, and weak interprofessional collaboration as persistent barriers. A few studies have addressed both policy and practices (Jaffer, 2018; Mintesnot, 2018; Tonegawa, 2019). Collectively, these studies indicate that while understanding of inclusive education among stakeholders has gradually shifted from a narrow special education focus to a broader inclusive education focus (Alemayehu, 2018; Dagnew, 2013 in Alemu et al., 2022; Franck & Joshi, 2017; Šiška et al., 2019; Belay et al., 2015), SWDs still face tremendous challenges that seriously impact real inclusionary practices (Lewis, 2009; Belay et al., 2015; Tonegawa, 2019).

Some specific barriers identified in Ethiopian public schools are: inadequate preparation for pre-service and in-service teaching practices on inclusive education (Mahider, 2013; Meskerem, 2017; Teketel, 2018; Tesfaye, 2020); inadequate accessibility to classrooms and the absence of ramps (Abebe et al., 2023; Teketel, 2018; Zelalem, 2018); poorly differentiated curriculum material and assessment procedures (Getachew, 2025; Jaffer, 2018; Belay et al., 2015); and limited collaboration between general teachers, special needs educators, parents,

Nevertheless, there is still a key problem left untouched. While searching thoroughly for dissertation papers, journals, or any other type of literature addressing the link between inclusive culture, policy, and practice through Booth and Ainscow's Index for Inclusion, the researcher found nothing at all. There is not one study conducted in Ethiopia analyzing how teachers view this issue with respect to their co-existence in primary schools in the country. Besides, previous studies did not pay attention to such aspects as Addis Ababa schools or focus on teachers' perspectives on culture, policy, and practice in the context of primary schools. Schools in the capital city offer unique opportunities since they have access to more resources and often become the test ground for different national education programs. Still, there has been no study exploring primary school teachers' perspectives on inclusive culture, inclusion of policy guidelines, and inclusion in practice.

This is a very important point to consider since, as international studies prove, teachers are seen as vital intermediaries who understand the ideas of inclusion and its policies and implement them

into their daily activities (Fiuza Asorey et al., 2021; Mateus Cifuentes et al., 2017; Rodriguez, 2021; Zabeli & Gjelaj, 2020). In an environment where there is little direction and many pressures from different institutions, the sense-making process carried out by teachers is critical to the implementation of inclusion culture and policy.

Filling this gap was crucial to moving towards the effective implementation of inclusive education in practice, rather than only in terms of policy discourse. Thus, the main objective of this study was to explore the issues of inclusive culture, policy, and practices at the selected public primary schools in Addis Ababa with regard to SWDs from the viewpoint of teachers. By employing the *Index for Inclusion* framework, this study examined how teachers perceive the current state of inclusive culture, the clarity and enactment of inclusive policies, and the nature of inclusive practices within their schools – and, crucially, how these three dimensions interact to either enable or constrain inclusion.

1.2. Statement of the Problem

In the period since Ethiopia's government officially embraced inclusive education, tangible improvements have been achieved in ensuring formal access to educational opportunities within its education system. The achievements include an increase in the number of enrolled SWDs, the creation of IERCs, the integration of SNIE within pre-service teacher education programs, and the mandatory introduction of inclusiveness as an undergraduate subject (Alemayehu, 2018; Šiška et al., 2020; Yorke et al., 2022). Moreover, empirical research carried out within the schools in Ethiopia also reveals that there are generally favorable attitudes towards inclusion on the part of teachers and schools' communities, indicating a certain degree of normative acceptance of the practice at the institutional level (Franck and Joshi, 2017; Tamirat & Xiaoduan, 2021). Collectively, these findings reveal that inclusive education has gained official status within Ethiopia's education system; nevertheless, while this is true in terms of policies and programs, their implementation within the schools remains inconsistent, thus resulting in a considerable gap between theory and practice (Burningham et al., 2024; Sarton and Smith, 2018; Yorke et al., 2022).

This gap is maintained through systemic barriers that hinder true inclusion in its essence. In terms of schools, inadequate assessment systems, inadequate supply of competent teachers, lack of

resources, overcrowded classes, and poor emphasis on the significance of inclusive education during school improvement planning (SIP) still influence instructional strategies employed (Getachew, 2025; Meskerem, 2017; MoE, 2012b; Teketel, 2018; Yorke et al., 2022). Therefore, SWDs experience interconnected barriers, namely disjointed assessment systems, lack of professional expertise, insufficient funding, lack of learning materials, and ineffective stakeholder collaboration, which altogether hinder their involvement and learning process (MoE, 2012b, 2022; Yorke et al., 2022). Cultural values, established practices, and institutional barriers continue to hamper implementation so that the school's culture, policies, and practices cannot function synergistically (Alexaki et al., 2022; Hata et al., 2021; Rodriguez, 2021; Schuelka, 2018; Tesfaye, 2020). This evidence shows that providing SWDs with more opportunities is not enough, as the necessary systemic changes associated with inclusive education have yet to be achieved.

Further evidence on this issue can be drawn from national data on education. As reported by the MoE (2021), less than 5.3% of CWDs aged between 4 and 18 years are enrolled in schools nationally, indicating deep structural obstacles that persist beyond policy commitment. In the case of Addis Ababa, for instance, an estimated 130,738 CWDs live within the city; however, over 90% of them do not attend school. This indicates that despite having relatively better educational facilities, the city is still unable to ensure the inclusion of all children.

Access aside, there is also empirical evidence pointing to the reality that the concept of inclusive education is often implemented in a fragmented manner instead of being an integrated approach. The three important dimensions of inclusive education—namely, school culture, policy, and practice (C-P-P)—operate separately rather than reinforcing each other, resulting in the failure to collectively enhance the experience of the learners (Alexaki et al., 2022). Empirical findings from primary schools in Ethiopia highlight how the poor development of inclusive school cultures has a negative effect on the policy and practices within mainstream educational institutions (Jaffer, 2018; Kocha & Senapathy, 2022; Tesaka, Alemayehu, & Tilahun, 2025).

Such conditions make it difficult for teachers to apply the innovative differentiated teaching methods and adapt alternative assessment procedures that would account for learner differences. In addition, the chances for collaborating with SNE educators, parents, and other professionals who could contribute to providing additional instruction and psychosocial support for SWDs seem

to be slim (Abebe et al., 2023; Mahider, 2013; Meskerem, 2017; Belay et al., 2015; Tesfaye, 2020), thereby resulting in poorly developed support systems and failure to meet the needs of such learners. Even though inclusivity policies might be officially assumed by the system, they do not embed in school culture or translate into instruction due to such contextual factors as overcrowding, lack of professional help, inadequate training in inclusive practices, and no clear guidelines on implementing IEPs (Choiriyah, 2022).

The above challenges highlight the mediation role of teachers' perception, as the self-confidence level, previous training, and perception of organizational support play critical roles in determining whether policies regarding inclusion will be implemented and the manner in which they will be carried out (Tsigie, 2022; Kebede & Phasha, 2024). In the absence of the enabling environment, implementation of inclusive practices becomes merely procedural, not transformative.

There is evidence in the literature of such trends in international empirical studies. The paper by Tan (2014) on inclusive education barriers in China, for instance, indicates that inclusive education barriers arise from interaction among several policy, cultural, and instructional factors, but without any empirical examination of their interaction structure. This has left a gap in empirical knowledge about the interdependence structure of inclusive culture, inclusive policy, and inclusive practice, which determines the actual learning experiences of students with various needs (Alexaki et al., 2022; Rodriguez, 2021).

A further review of the empirical literature on Ethiopia highlights some recurring issues regarding the research on inclusive education. While the existing literature offers important insights into specific areas, such as physical school accessibility (Aderie, 2017), students' feeling of belonging (Schiemer, 2017), social inclusion and learning (Tefera et al., 2018), policy implementation (Tonegawa, 2019), system- and school-based assessment (Yorke et al., 2022), practical teaching related issues (Lidetu, 2020), stigma and disability (Molalign, 2021), influences on teacher practices (Ermias, 2024), and importance of resource centers (Šiška et al., 2020), it is notable that all these studies use narrow perspectives. In other words, instead of looking at the process, where culture, policy, and practice interact, scholars consider only separate parts.

More specifically, little consideration has been paid to the intricate relationships between an inclusive culture, policy, and practice within the context of the primary education stage, where key norms and practices for inclusion are formed. Despite some positive outcomes of inclusion being achieved within a supportive local context, including greater social involvement by deaf children and effective interaction for physically challenged learners, those achievements have not been consistent, varying greatly depending on the local context and infrastructure in place (Getachew, 2025; Mahider, 2013; Müllegger & Chapman, 2024). The overwhelming presence of qualitative inquiry with a small sample size, as well as inadequate quantitative designs, limits such studies' ability to explore structural connections among the three dimensions of inclusion.

Consequently, three related research gaps emerge. First, there are few empirical investigations on inclusive education at the primary schooling stage in Ethiopia, although it is critical for implementing inclusive education. Second, inclusive education is often treated as a holistic system where the aspects of culture, policy, and practice are intertwined, yet most studies address each of these aspects separately. Third, a preponderance of micro-level qualitative studies has limited the employment of an integrated methodological framework that would enable empirical investigation of the structural links among these three aspects. Taken together, these research gaps hamper not only theoretical advancement but also the generation of data pertinent to system-wide reform (Sarton & Smith, 2018; Burningham et al., 2024; Alexaki et al., 2022).

What is already known is that the government of Ethiopia has endorsed progressive legal and policy platforms for inclusive education, making significant progress in the inclusion of SWDs. What has not yet been sufficiently investigated, however, is how the inclusive school culture influences the implementation of policies, how policy intentions are implemented through daily practice at schools, and how the inconsistency between culture, policy, and practice impacts the real learning experiences of SWDs. In all of these, teacher mediation is crucial in connecting policy intentions to practice and bridging the gap or creating dissonance between them (Kebede & Phasha, 2024; Tsigie, 2022).

The significance of this gap becomes even more evident when analyzed from the teachers' perspective, as they are pivotal mediators who interpret, mediate, and implement inclusive education in under-resourced schools. Teachers' perceptions are also influenced by a lack of

infrastructure, poor classroom facilities, and the non-utilization of universal design principles, which ultimately hinder their ability to translate policies into action (Belay et al., 2015; Jaffer, 2018; Teketel, 2018; Zelalem, 2018). Without insight into this mediating process, inclusive education might become nothing more than procedural compliance and fail to transform into institutional change.

To address this requirement, the study investigated teachers' perspectives on inclusion in school culture, policy, and practice in selected public primary schools in Addis Ababa. Through combining inferential statistics and Structural Equation Modeling (SEM) with qualitative inquiry, the study assessed both the extent of inclusivity and the structural relationships among key dimensions, generating empirically grounded evidence on the mediational mechanisms through which inclusion is enabled or constrained in practice for SWDs (Alexaki et al., 2022).

1.3. Objectives of the Study

The general objective of this study is to systematically examine the inclusivity of school culture, policy, and practice as enacted in selected public primary schools of Addis Ababa, from teachers' perspectives, treating these dimensions as interrelated and co-evolving rather than as discrete attributes.

Specifically, the study was intended to:

- examine the extent to which primary school teachers perceive their schools as having inclusive cultures, policies, and practices for SWDs
- assess whether teachers' perceptions of ISC, ISP, and ISPr differ statistically significantly across demographic and professional characteristics (e.g. gender, age, educational qualification, total years of teaching experience, prior experience with SWDs, & students' level of impairment
- analyze the structural relationships among teachers' perceptions of ISC, ISP, and ISPr
- examine the mediating role of ISP in the relationship between ISC and ISPr
- explore how teachers describe the manifestations, enabling conditions, and challenges associated with ISC, ISP, and ISPr

Overall, these objectives intended to generate an empirically grounded and system-oriented understanding of inclusive education at the school level, emphasizing the dynamic interplay among culture, policy, and practice as they are interpreted and enacted by teachers within resource-constrained primary school contexts, rather than treating these dimensions as isolated components.

1.4. Significance of the Study

This study will yield substantive and original contributions not only to the field of inclusive education but also to policies and practices related to it, especially in the context of Ethiopian public primary schools, where there are few studies on the interaction among inclusive culture, policy, and practice.

Contribution to Knowledge: This investigation will contribute to knowledge about inclusive education through the provision of empirical, theoretical, and contextual insights into the interactions of inclusive school culture, policy, and practice as an integral system at primary schools in Ethiopia. Although many previous studies have looked into the issue individually, this study will contribute theoretically and empirically to the analysis of the structural relationship among them by using the Index for Inclusion of Booth and Ainscow. With the use of SEM, it will not only describe the relationship but also show the extent to which each variable affects the other in terms of its magnitude and direction, with the inclusion of culture and policy impacting school-level practice via mediating factors.

This study also adds value to the topic through contextual contribution, as it produces systematic evidence at the school level about inclusive education practices at the public primary schools in Ethiopia. The study highlights the perspective of the teachers in order to show how the policies on inclusive education are implemented and practiced in daily school activities. Through this, it shows what conditions make inclusive education transformational as opposed to being merely symbolic. Overall, the contribution made by this study is valuable in helping us understand inclusive education as a relational and systematically situated phenomenon.

Theoretical Importance: From the theoretical point of view, the proposed study contributes to the literature on inclusive education because it empirically explores the relationship among inclusive school culture, policy, and practice through Booth & Ainscow's Index for Inclusion.

Contrary to studies that consider inclusion as an additive process (sequential relationship), this study examines its development from a holistic perspective and analyzes the coevolution of inclusion dimensions as a dynamic system of interrelated aspects. With an analysis of inclusive processes taking place in Ethiopian primary schools, the study fills the gap left in the literature because of its focus on the Global North only.

Methodological Significance: From a methodological perspective, the study uses an explanatory sequential mixed methods approach by incorporating SEM alongside qualitative exploration. This design makes it possible to examine structural relations and real-life meanings at the same time, making it possible to analyze not only statistical inter-relations between the dimensions but also how teachers actually perceive these processes. The combination of quantitative analysis with qualitative explanation adds to methodological robustness and provides a replicable methodological template for future studies exploring such complicated reforms.

Practical Implications: The findings of this study have direct practical implications for teachers, educational administrators, SNIE professionals, and school leaders operating in Ethiopian public primary schools. Given the identification of the relevant cultural, policy-related, and practice-based limitations impacting the process of implementing inclusive education practices, the present findings provide important empirical insights for the development of appropriate strategies aimed at improving inclusive education practice at the school and classroom levels without a mere focus on compliance procedures.

Policy Implications: From the standpoint of public policies, the current study has important implications for developing effective inclusive education policies in Ethiopia. In particular, by providing an insight into how the process of enacting certain policies is enabled or constrained depending on the corresponding school culture, as well as how policies shape classroom practices, the present findings are likely to promote the design of more realistic and context-sensitive policies. Most importantly, the study offers a contextualized empirical basis for operationalizing the Index for Inclusion within Ethiopian public primary schools, contributing to more coherent, sustainable, and evidence-informed inclusive education reforms.

Overall, the study advances inclusive education as a systemically grounded and practice-oriented reform agenda, rather than a symbolic policy commitment, with relevance for education systems in low- and middle-income countries seeking to translate inclusive ideals into sustained school-level transformation.

1.5. Scope of the Study

This study was delimited to the investigation of the inclusion of SWDs in regular public primary schools in Addis Ababa, with particular emphasis on teachers' perspectives on inclusive school culture, policy, and practice. Specifically, it examined how teachers perceive the extent to which these interrelated dimensions enable or constrain the inclusion of SWDs within mainstream primary education.

In terms of geography, the study is restricted to regular public primary schools in Addis Ababa that enrolled SWDs in Grades 1 to 8. Private schools were excluded because the majority of SWDs are enrolled in government schools. Special schools were deliberately excluded, since the study examines inclusive education at mainstream schools. Regular public secondary schools were deliberately excluded as the study was restricted to examining primary education.

Theoretically, the study was delimited within the theoretical frame of integration as espoused by the Index for Inclusion, the Social Model of Disability, and Bioecological Systems Theory of Bronfenbrenner. In other words, in the present study, inclusion is viewed as a product of interaction among ISC, ISP, and ISPr rather than separate individual events or processes. It should be noted that the present study did not employ the Medical or Deficit Models of Disability either theoretically or methodologically in order to examine inclusive education. Hence, it is mainly systemic and school-level variables that would be used to explain inclusion.

Besides, the study was delimited to teachers' perspectives of inclusion as a unit of analysis. Bronfenbrenner's theory of ecology will only be used to contextualize schools in terms of ecological systems. However, the present study would not make an empirical examination of all ecological system levels.

1.6. Operational Definition of Key Terms

Inclusive Education: While often described as the means through which education systems are expected to address learner diversity, inclusivity means very different things depending on how this addressing happens in practice (UNESCO, 2017). When talking about regular primary classrooms, inclusion should go beyond merely the placement of SWDs and include the circumstances in which children can participate in the educational process and achieve similar results to those of their typically developing peers (Pijl, Meijer, & Hegarty, 1997).

For this study, inclusive education can be described as a continuous process involving the restructuring of school cultures, policies, and practices in order to influence the presence, participation, and learning of SWDs within regular public primary schools. This process will be observed from the perspective of primary school teachers working in Addis Ababa. Empirically, inclusive education is operationalized across three interrelated dimensions—ISC, ISP, and ISPr—each comprising two analytically related sub-dimensions measured using a five-point Likert scale (1 = Strongly Disagree to 5 = Strongly Agree).

Inclusive School Culture (ISC) refers to the shared beliefs, values, attitudes, norms, and collaborative practices through which a school community interprets learner diversity and defines its responsibilities toward SWDs. In this study, culture is understood not as an abstract value orientation but as a set of relational and normative expectations that shape teachers' interactions with students, colleagues, and families within the school context (Booth & Ainscow, 2011). ISC is operationalized through teachers' perceptions of two sub-dimensions:

- **Building Community (BC) for SWDs**, which captures the extent to which inclusive relationships are enacted through staff collaboration, peer support, parental engagement, leadership commitment, and structured opportunities for SWDs to participate in academic and social activities.
- **Establishing Inclusive Values (EIV) for SWDs**, which reflects the degree to which equity, respect for diversity, non-discrimination, positive peer relations, high expectations, and learner self-confidence are actively promoted and sustained within school routines. At last,

teachers rated the survey items 1–18 relating to these sub-dimensions where higher scores mean higher perceptions regarding the ISC.

Inclusiveness of School Policy (ISP) can be defined as the formal structures, guidelines, and organizational designs through which principles of inclusive education are turned into rules and procedures within schools. Within the context of the current study, policy inclusiveness is considered as a mediator between national/local policy commitment and school implementation, not just the existence of policies. ISP will be measured by two sub-dimensions:

- **Policy Awareness and Implementation (PAI)** represents teachers' awareness of the inclusive education policy frameworks and how well such policies have been incorporated into the vision, rules, admission processes, assessment systems, and accessibility provisions in schools.
- **Organizing Support for the Inclusion of SWDs**, which addresses how schools coordinate and sustain support structures, including inclusion teams, IEPs, professional development opportunities, stakeholder collaboration, and resource allocation. In sum, teachers rated survey items 19–35 for the ISP dimension, with higher scores indicating stronger perceptions of inclusive policy implementation.

Inclusive School Practice (ISPr) refers to the instructional and organizational activities through which inclusive culture and policy are enacted in classrooms and school routines. In this study, practice is treated as the point at which inclusion is operationalized under concrete conditions, including class size, resource availability, and teachers' professional capacity. ISPr is operationalized through two sub-dimensions:

- **Teaching–Learning (TL) Practices for SWDs**, focusing on teachers' reported use of differentiated instruction, flexible grouping, co-teaching, peer-assisted learning, varied assessment approaches, and the application of Universal Design for Learning (UDL) principles.
- **Resource Provision (RP) Practices for SWDs**, addressing the availability and effective use of instructional and assistive resources, such as accessible learning materials, adaptive

furniture, resource-center facilities, and educational technologies. Totally, teachers rated survey items 36–52, with higher scores indicating stronger perceptions of ISPrs.

Teachers' Perceptions and Perspectives: In this study, **teachers' perceptions** are operationalized as teachers' immediate, self-reported interpretations of inclusive school culture, policy provisions, and practices for SWDs, as captured through structured questionnaire items and subsequently probed in focus group discussions (FGDs). **Teachers' perspectives** are also operationalized as broader interpretive standpoints and evaluative judgments shaped by professional experience, institutional context, and interaction with SWDs. These perspectives are articulated primarily through narrative accounts generated in FGDs, where teachers reflect on lived classroom and school experiences rather than responding to item-specific prompts.

Teacher Perceptions and Perspectives: In this study, teacher perceptions are defined as teachers' immediate, self-reported interpretation of the inclusive school culture, policy, and practice towards SWDs, which can be measured using survey items and explored in the follow-up focus group discussion (FGD) session. Teacher perspectives are also defined as more interpretative views and evaluations influenced by the teachers' professional experience, organizational context, and their interactions with SWDs, which can be expressed in the form of stories in the FGD session without responding to survey items.

Regular primary schools are the public schools funded and managed by the government that provide grade levels from 1 to 8 under the Addis Ababa City Administration (AACA). International schools, private schools, and NGO schools are excluded from this study.

Students with Disabilities (SWDs): For this study, SWDs are students attending ordinary public primary schools (Grades 1-8) in Addis Ababa who have physical, sensory, intellectual, or learning impairments that affect their access to, involvement in, or success within the ordinary curriculum. The designation highlights diversity among students in regular classes, as opposed to special or separate educational institutions.

1.7. Organization of the Dissertation Report

This dissertation is structured into six chapters. Chapter One provides the context of the study by introducing the background, stating the problem, indicating the objectives of the study, its significance, and the essential operational definitions needed to understand the problem under investigation. Chapter Two reviews related literature by analyzing the theories, concepts, and empirical findings on the topic. This chapter aims to provide an analytical basis for the study by explaining some of the key ideas of inclusive education, especially in relation to concepts such as inclusive school culture, policy, and practice, as well as disability. Moreover, it provides some of the key concepts, including the various models of disability and their implications for inclusive education, the process through which the world community shifted from segregation to inclusion, and the history of the transition process in the case of Ethiopia. Culture, policy, and practice are analyzed as distinct but interconnected concepts with a focus on the challenges that they pose to inclusive schooling in Ethiopia and other countries with similar characteristics.

The Methodology chapter will cover the research design, where the research design, population, sampling process, data gathering tools, analysis methods, and ethical issues will be discussed. The next chapter will present the results of both the quantitative and qualitative parts of the study in connection with the research questions and the analytical framework. In Chapter Five, the results will be interpreted and analyzed in connection with the existing empirical and theoretical literature, with emphasis on the points of agreement and disagreement. Chapter Six will be the concluding chapter of the dissertation, where the main findings will be summarized and their implications outlined.

CHAPTER TWO

REVIEW OF LITERATURE

2.1. Conceptualizing Inclusive Education and Disability

Conceptual clarity is foundational to any rigorous analysis of inclusive education, particularly in contexts where policy commitments, school practices, and the lived experiences of SWDs do not consistently align. Inclusive education and disability are not neutral or self-evident constructs; they are historically produced, socially mediated, and continually re-negotiated within legal, cultural, and institutional settings. How inclusive education is defined shapes what counts as exclusion, whose participation is valued, and whether schools prioritize mere access or pursue the deeper goals of presence, participation, and achievement. Likewise, how disability is conceptualized, through charity-oriented, medical, social, rights-based, or biopsychosocial lenses, profoundly influences educational responsibility, expectations, and the kinds of supports and school-level adaptations considered legitimate. Without explicit conceptual grounding, inclusive education risks being reduced to placement or policy rhetoric, while disability may be treated as an individual deficit rather than a relational phenomenon shaped by environmental and institutional barriers.

Accordingly, Section 2.1 establishes the conceptual foundations for this study by first clarifying inclusive education as a rights-based and system-transformative process oriented toward identifying and removing barriers to learning, participation and achievement (Section 2.1.1), and then examining key disability models and their implications for how schools interpret difference and organize participation and support (Section 2.1.2). As an analytic thread linking these discussions to the remainder of the review, the section adopts the Culture–Policy–Practice (C-P-P) lens to highlight how inclusive values and beliefs (culture), formal commitments and guidelines (policy), and everyday teaching–learning routines (practice) interact to either reproduce exclusion or enable meaningful inclusion in real school contexts.

2.1.1. Defining Inclusive Education: Core Concepts

Inclusive education represents a profound paradigm shift in how education systems understand and respond to learner diversity, moving beyond models of exclusion and segregation to advance a rights-based philosophy that reconceptualizes diversity not as a deficit to be remedied but as a catalyst for systemic transformation (Ainscow, Dyson, & Weiner, 2013; Slee, 2011). Its definitional terrain remains dynamic and contested, reflecting diverse historical, cultural, and policy traditions. As Stubbs (2008) argues, definitions of inclusive education must evolve to uphold the educational rights of all learners, particularly those historically marginalized. The absence of a single, fixed definition is therefore not a conceptual weakness but a reflection of inclusion's breadth as both a normative commitment and an implementation challenge (Sanahuja Olmos, & Miquel, 2017; Echeita & Ainscow, 2011; Ainscow et al., 2006).

Historically, inclusive education evolved through a gradual progression from exclusion and segregation, to integration, and ultimately toward inclusion (Ainscow, 1999; Mittler, 2000). Early formulations focused primarily on placement, educating CWDs alongside their peers in mainstream settings to affirm their right to belonging (Erwin, 1993). This understanding was significantly broadened through international milestones, most notably the Salamanca Statement and Framework for Action (UNESCO, 1994), which asserted that mainstream schools should accommodate all learners, regardless of disability or other differences. The UNCRPD (United Nations, 2006) further strengthened this position by framing inclusive education as a legal and moral obligation under Article 24, embedding inclusion firmly within a rights-based and social justice agenda (UNESCO, 1994; United Nations, 2006).

Conceptually, inclusive education reflects a decisive shift from psycho-medical explanations of educational difficulty toward the social model of disability. From this perspective, exclusion arises not from individual impairments but from systemic barriers such as inflexible curricula, inaccessible environments, discriminatory attitudes, and ineffective policies (Anderson & Boyle, 2015; UNESCO, 2009). Inclusion is therefore understood as a continuous process of identifying and removing barriers to learners' presence, participation, and achievement within mainstream educational settings (Ainscow et al., 2006; Ainscow & Miles, 2008). This triadic focus is critical: it moves beyond physical access (presence) to emphasize meaningful engagement (participation)

and equitable learning outcomes (achievement), recognizing that enrolment alone may mask persistent forms of exclusion rooted in pedagogy, expectations, or stigma (Graham, 2020).

A key conceptual distinction is that inclusive education is not synonymous with integration or segregation. Integration often assumes that learners must assimilate into largely unchanged mainstream systems, while segregation removes them from these systems altogether. Inclusion, by contrast, demands the proactive transformation of education systems themselves, requiring structures, cultures, and practices to adapt in response to learner diversity rather than expecting learners to conform to dominant norms (Slee, 2011; Stubbs, 2008). This systemic orientation is reflected in influential frameworks such as the *Index for Inclusion*, which conceptualizes inclusion as the iterative restructuring of school cultures, policies, and practices so that diversity is recognized and leveraged as a pedagogical resource (Booth & Ainscow, 2000, 2002, 2011).

Despite broad international endorsement, inclusive education remains a multifaceted and sometimes ambiguous concept. It has been interpreted variously as a focus on SWDs, a broader response to diverse learning needs, or a transformative project aimed at equity and social change (Ainscow et al., 2006; Echeita & Ainscow, 2011; Azorín & Ainscow, 2020). While these interpretations differ in emphasis, they converge on a shared commitment to reducing exclusion, discrimination, and educational inequity (Anderson & Boyle, 2015; Waitoller & Artiles, 2013). One of the most widely cited definitions captures this orientation by describing inclusion as a process of "increasing the participation of students in, and reducing their exclusion from, the cultures, curricula and communities of local schools" (Booth & Ainscow, 2002, p. 3). This formulation is particularly influential in positioning inclusion as an ongoing, school-embedded process rather than a discrete intervention or technical solution.

Inclusive education is inherently multi-dimensional and context-sensitive. While primarily concerned with formal schooling, its principles extend to non-formal and community-based learning environments, especially in contexts where educational support spans home, school, and community (Stubbs, 2008; UNESCO, 2005). Fundamentally, inclusion affirms that all learners, regardless of disability, gender, language, ethnicity, or socioeconomic status, have the right to learn together in education systems that adapt to their needs. This obligation is reinforced by international legal instruments such as the 2006 UNCRPD and reflected in national policy

frameworks, including those in Ethiopia, which emphasize the identification and removal of barriers to learning and participation for all learners, particularly those vulnerable to exclusion (MoE, 2006, 2012, 2017, 2022).

Taken together, the literature conceptualizes inclusive education as a dynamic, continuous, and transformative process rather than a static policy goal. Inclusion and exclusion are understood as interconnected phenomena, with inclusion requiring sustained efforts to challenge exclusionary structures, beliefs, and practices embedded within schools (Ainscow & Miles, 2008). Consequently, scholars argue that inclusive education is most coherently understood and enacted through an integrated C–P–P framework (Booth & Ainscow, 2000, 2002, 2011; Ainscow et al., 2006). Within this framework, inclusive values and beliefs (culture), formal commitments and guidelines (policy), and everyday teaching–learning actions (practice) are mutually reinforcing. Inclusive culture constitutes the foundational bedrock, generating the shared moral purpose that animates policy and gives coherence to practice; without it, policies risk remaining symbolic and practices fragmented (Kugelmass, 2006; Booth & Ainscow, 2002). Defining inclusive education therefore leads directly to the question of how it is operationalized in real school contexts, underscoring the analytical value of the C–P–P lens adopted in this study.

2.1.2. Understanding Disability in School Contexts: Conceptual Models and Educational Implications

Disability in schooling is not merely a matter of categorizing impairments; it is a socially and institutionally mediated phenomenon shaped by how schools interpret difference, allocate responsibility, and organize participation. Conceptual models of disability function as foundational frames that structure perceptions of learners, define what counts as an ‘educational problem,’ and legitimize institutional responses. In school contexts, these models influence whether disability is understood primarily as a deficit located in the child, a mismatch between the student and an exclusionary environment, or a rights-based demand for systemic transformation and accountability. Understanding these models is therefore essential for analyzing how teachers’ perspectives and school routines in Addis Ababa (Ethiopia) may reflect overlapping, and at times contradictory, assumptions about disability, inclusion, and educational equity.

A useful starting point is to recognize that disability models have evolved historically in ways that track broader societal beliefs and institutional arrangements. Dominant interpretations long oscillated between paternalistic and medicalized framings, often legitimizing segregation, institutionalization, and conditional participation (Sabatello, 2013). Over time, advocacy, legal reform, and international human rights instruments consolidated a normative shift toward understanding disability as a societal and systemic concern rather than merely an individual deficit (United Nations, 2006). This shift is reflected in the UNCRPD, which guarantees inclusive education and prohibits exclusion from general education on the basis of disability (United Nations Department of Economic and Social Affairs [UNDESA], n.d.). Yet, schools frequently exhibit model overlap in practice: rights-based policy language may be adopted formally while everyday routines continue to reflect charity-oriented 'care' assumptions or medicalized eligibility and readiness logics. This overlap is analytically important for the present study because it provides a lens for interpreting tensions between teachers' stated commitments, institutional norms, and classroom-level enactment.

Early dominant approaches to disability were frequently shaped by charity-oriented understandings that positioned PWDs as dependent and in need of benevolence. In educational settings, such framing often underwrites a logic of protection through separation, where support becomes discretionary rather than obligatory and participation is treated as conditional. This orientation can translate into a culture of sympathy without belonging, where pedagogical expectations are lowered in the name of care. In the Ethiopian context, disability rights advocacy has emphasized how historically rooted charity framings may contribute to stigma and exclusion unless replaced by rights-based commitments and institutional accountability (Iyassu & McKinnon, 2021). For teachers, a charity-oriented stance may shape inclusion as an optional act of goodwill contingent on personal disposition, time, or resources rather than as a professional obligation grounded in equity.

A closely related but more institutionalized framework is the medical model, which conceptualizes disability as an individual pathology requiring diagnosis, treatment, or remediation. In education, this approach often structures eligibility and readiness narratives, whereby meaningful participation in general education becomes conditional on assessment, rehabilitation, or specialist intervention (Sabatello, 2013). While this model can facilitate access to assistive devices,

specialized assessment, and health-related supports, it also risks locating educational difficulties primarily within the learner while minimizing how school design, teaching practice, and institutional barriers shape exclusion. Consequently, medicalized framings can reinforce deficit-oriented interpretations, normalize segregated placements and pull-out interventions, and position disability as a specialist matter external to mainstream pedagogy. In such contexts, inclusion may be endorsed rhetorically while everyday routines continue to weaken collective responsibility among educators.

Against these deficit-oriented approaches, later conceptual shifts reframed disability through the lens of environmental barriers and social arrangements. The social model positions disability as the product of interaction between individuals and environments that fail to accommodate human diversity, emphasizing that exclusion is shaped by physical, attitudinal, curricular, and institutional barriers rather than impairment alone (Oliver, 2013). Educationally, this perspective redirects attention from 'fixing' the learner to transforming schools. It supports inclusive cultures grounded in belonging, peer acceptance, and high expectations; it informs policies oriented toward systematic barrier removal through accessibility standards, anti-discrimination measures, and structured planning; and it legitimizes classroom practices aligned with differentiated instruction, collaborative learning, and universal design.

The rights-based model extends this shift by clarifying that inclusion is not simply a pedagogical preference or a school-improvement choice but a legal and ethical obligation. It frames learners and families as rights-holders and institutions as duty-bearers, responsible for guaranteeing non-discrimination, reasonable accommodation, participatory decision-making, and accountability mechanisms. This approach is codified in the CRPD, particularly its inclusive education provisions (United Nations, 2006; UNDESA, n.d.). Implementation guidance further stresses that inclusion requires systemic transformation in financing, administration, service delivery, teacher development, and school organization, rather than merely placing SWDs in mainstream classrooms without adequate supports (UNICEF, 2017). In this sense, the rights-based framework provides both a normative benchmark and an analytical lens for evaluating gaps between policy commitments and lived school realities. It also helps explain why exclusion may persist where safeguards are weak, as highlighted in human rights reporting on harmful practices historically

targeting PWDs (Australian Human Rights Commission, 2014; United Nations Human Rights Council, 2017).

Although the social and rights-based models are vital for clarifying accountability and barrier removal, an integrative lens is often needed to avoid a rigid medical–social polarization. The biopsychosocial model, operationalized through the World Health Organization's International Classification of Functioning, Disability and Health (ICF), conceptualizes disability as a dynamic interaction among impairment, functional capacity, personal factors, and environmental conditions (WHO, 2001). This model is especially useful for schooling because it keeps legitimate support needs visible while continuing to emphasize the decisive role of school environments. It supports nuanced expectations, multi-level planning, and classroom practices that combine universal design with individualized supports where necessary. Because it foregrounds interaction and multi-level influence, it also provides a bridge to ecological perspectives, underscoring how classrooms, leadership practices, family engagement, community attitudes, and system-level policies collectively shape teachers' perspectives and inclusive practice.

Taken together, these models demonstrate that inclusive schooling cannot be reduced to placement decisions. Where charity-oriented or medical logics dominate, inclusion tends to be discretionary or conditional, often accompanied by lowered expectations and sustained segregation even where inclusion is endorsed rhetorically. By contrast, social, rights-based, and biopsychosocial frameworks emphasize barrier removal, meaningful participation, and institutional accountability, while also legitimizing the supports necessary for equitable learning. For the present study, these conceptualizations provide a coherent map for interpreting teachers' perspectives in Addis Ababa primary schools and for expecting how different institutional logics may enable or constrain inclusion across the interrelated dimensions of ISC, ISP, and ISPr.

2.2. From Segregation to Inclusion: Global and National Trajectories

The evolution of educational responses to SWDs constitutes a historically layered and contested transformation, not a linear progression. This shift, from segregation through integration to inclusion, has been driven by fundamentally changing conceptualizations of disability, the ascendancy of rights-based discourses, and the variable capacity of education systems to

accommodate learner diversity. Critically, each historical phase has deposited enduring structural and ideological legacies that continue to configure contemporary school cultures, policies, and practices. Consequently, a critical analysis of this trajectory is essential; it moves beyond description to diagnose the persistent disjuncture between formal inclusive policy commitments and their uneven realization in the daily life of schools. Examining these global and national trajectories thus frames inclusion as an ongoing process of systemic reform, providing the necessary historical context to employ the Culture–Policy–Practice (C-P-P) framework as an analytical tool for investigating its implementation.

2.2.1. Global Evolution from Segregation to Inclusion: Key Milestones and Debates

This section traces the historical and conceptual evolution of educational responses to SWDs, emphasizing that the movement from segregation to inclusion is not a linear progression but a contested transformation of paradigms. Shifts in educational provision have been shaped by changing understandings of disability (traditional/charity, biomedical, and social/rights-based), major legal and policy milestones, and persistent institutional constraints that may reproduce exclusion even as policy language changes. Tracing this trajectory is therefore not merely descriptive but analytically necessary: it clarifies why gaps persist between inclusive commitments and lived schooling realities, and it provides a conceptual lens for interpreting national trajectories, particularly Ethiopia's, where multiple models frequently coexist and where policy commitments may outpace implementation capacity.

A. Segregation Approach: Traditional, Charity, and Medical Models

The creation of segregation within the education system for SWDs should be examined in the context of the dominant historical socio-cultural and epistemological discourses concerning disability. Many cultures in the world explained disability using their religions and specific scripts, which considered it as the result of some misfortunes, divine punishments, or even as a kind of divine power (Rhodes, Antoine, & Abidin, 2025). Such attitudes towards disabled people often resulted in stigmatization and social exclusion when families tried to hide their CWDs, while educators and schools excluded them from learning processes or saw them as incapable and uneducable (Tirussew, 2005; Mackelprang & Salsgiver, 2021). It was called by some authors a

traditional model of disability that resulted in social and institutional exclusion of PWDs from various areas such as education, work opportunities, and politics. In the discourses based on charitable attitudes, people with disabilities were considered as passive recipients of assistance but not active subjects capable of learning. Stigma related to disability might lead to physical violence against individuals and serious damage (Braddock & Parish, 2001).

With the expansion of medical science, disability became increasingly framed through a biomedical lens, conceptualizing impairment as individual dysfunction requiring diagnosis and treatment (WHO, 2001). While this shift enabled new forms of care and classification, it also reinforced deficit-oriented assumptions by locating 'the problem' primarily within the individual rather than within social, environmental, and educational arrangements (Oliver, 1990; Shakespeare, 2006). In education, this logic legitimized segregated provision: special schools and residential institutions were established for learners categorized by impairment type, based on the assumption that specialized settings, personnel, and methods represented the most appropriate response to disability (Osgood, 2005; Gargiulo & Bouck, 2019; Tirussew, 2005). Over time, special education became institutionalized as a parallel system of 'separate and special' placements and professional specialization, particularly in North America and Europe, where efforts to provide specialized support inadvertently normalized segregation as the default response to disability and created institutional patterns that later reforms have struggled to dismantle.

Historically, segregated special education evolved through identifiable phases. Early provision focused predominantly on learners with sensory impairments, producing landmark institutions such as the Liverpool Blind School (1791) and the American School for the Deaf (1817) (Osgood, 2005; Tirussew, 2005). These initiatives were often driven by philanthropy and religious organizations, but their institutional form reinforced separation from mainstream schooling. By the early twentieth century, compulsory education movements expanded schooling systems; however, the extension of educational rights to CWDs occurred unevenly and often belatedly (UNESCO, 2017). Even where legal access existed, practice frequently remained exclusionary, with disability categories grouped in institutions and with limited interaction with non-disabled peers (Osgood, 2005; Tirussew, 2005). This unevenness is analytically significant because it helps explain why later reforms often confronted deeply embedded institutional arrangements and cultural expectations of separation.

A central critique in the literature is that segregation produced what Tirussew (2005) terms a "discrete ecology" for special education, organizationally and conceptually detached from general education. While segregated provision sometimes enabled tailored instruction and resources for particular groups, it also generated durable limitations including low expectations, social isolation, and an overemphasis on 'exceptionality' as the defining feature of the learner (Ferri & Connor, 2005). This deficit orientation narrowed pedagogy toward remediating what the child could not do, often underplaying strengths, identity, and environmental adaptation (Tirussew, 2005). Moreover, segregated systems were frequently costly and served only a limited segment of learners, exposing tensions between specialized provision and broader equity and human-rights commitments (Osgood, 2005; Shakespeare, 2006; McLeskey, Rosenberg, & Westling, 2013). These critiques set the stage for later reforms: movement away from segregation was driven not only by moral arguments but also by evidence of systemic inequities, inefficiencies, and exclusionary outcomes.

B. Integration Approach: Mainstreaming without Systemic Change

From the late 1970s onward, disability studies and disability rights advocacy increasingly challenged deficit-based framings, contributing to the rise of the social model of disability as a dominant counter-paradigm (Oliver, 1990; Shakespeare, 2006; Tirussew, 2005). The social model argues that disability is produced not only by impairments but by socially constructed barriers, such as architectural, attitudinal, institutional, and curricular, that restrict participation (Oliver, 1990). This shift fueled reforms emphasizing integration or mainstreaming, premised on educating SWDs alongside peers in regular schools to the greatest extent possible (Tirussew, 2005). Conceptually, integration represented an important departure from categorical institutionalization; analytically, however, it remained vulnerable to reproducing segregation within mainstream schools through special classes, pull-out models, and limited participation.

In the United States, the Education for All Handicapped Children Act (EAHCA) of 1975 (Public Law 94-142) represented a major legal milestone, establishing procedural safeguards and codifying principles such as Free Appropriate Public Education (FAPE), due process, parental participation, and placement in the Least Restrictive Environment (LRE), alongside requirements such as IEPs (Tirussew, 2005). Subsequent developments under IDEA, including the 2004 amendments, reinforced these commitments and sought alignment with broader accountability

reforms such as No Child Left Behind (Tirussew, 2005). Comparable trajectories unfolded elsewhere where compulsory education, anti-discrimination norms, and expanding rights discourse placed pressure on systems to move beyond overt exclusion (UNESCO, 2017). These legal developments were consequential in shifting disability from a charitable concern to an enforceable entitlement, yet they did not automatically transform classroom practice.

A key debate, therefore, is that integration often remained a placement reform rather than a systemic reform. In many settings, learners were expected to fit into largely unchanged school structures, with supports concentrated on the individual child rather than on school-wide transformation (Haug, 2017; Florian, 2008). This often resulted in nominal inclusion, where students were physically present in mainstream settings but excluded from meaningful participation and equitable achievement due to inaccessible or discriminatory practices. Integration was also often selective, privileging learners with mild impairments while implicitly excluding those with complex or high-support needs, thereby reproducing stratified participation and reinforcing the assumption that not all learners can be educated together (Friend & Bursuck, 2019; Tirussew, 2005). For these reasons, integration is widely treated as an important transitional stage but not the conceptual endpoint implied by rights-based inclusion (Sandoval, Muñoz, & Márquez, 2021; Stubbs, 2008). The lesson carried forward into inclusion scholarship is that access and placement are necessary but insufficient: transformation must occur in curriculum, pedagogy, assessment, school culture, and resourcing.

C. Inclusion Approach: Rights-Based Systemic Reform (C–P–P Lens)

Inclusion emerged as a more ambitious reform agenda that extends beyond integration's placement focus toward transforming the education system itself. Rather than treating disability as an individual problem to be accommodated case-by-case, inclusion emphasizes restructuring school cultures, policies, and practices so that all learners can participate and achieve within the ordinary life of the school (Ainscow, 2020; Booth & Ainscow, 2002, 2011). Internationally, the Salamanca Statement (UNESCO, 1994) functioned as a pivotal normative milestone by affirming that mainstream schools should accommodate all children, and this orientation was later strengthened by the UNCRPD (2006), which reframed inclusive education as a legal entitlement rather than a discretionary reform. Within this paradigm, the goal is not merely access but meaningful participation and achievement, especially for those most vulnerable to exclusionary pressures

(Florian, 2008). In this sense, inclusion reframes the core question from "how can the learner fit?" to "how must schooling be reorganized to value and educate all learners?"

A defining contribution of inclusion scholarship is its insistence that sustainable change is systemic and multi-level. Booth and Ainscow's Index for Inclusion operationalizes inclusion through iterative reform across three interdependent dimensions: cultures (values, belonging, relationships), policies (rules, plans, resourcing, responsibilities), and practices (teaching–learning processes and participation in school life) (Booth & Ainscow, 2002, 2011). This framing clarifies why inclusion is difficult to achieve: reforms that prioritize policy without cultural change may remain symbolic, while reforms that emphasize classroom techniques without enabling policy and shared values tend to remain fragmented and fragile. Inclusion, therefore, functions as a long-term institutional change project rather than a discrete technical program. It also provides a usable analytic structure for doctoral study by specifying where inclusion can succeed or fail, at the level of shared values, enabling rules and resources, or everyday pedagogical routines.

Contemporary debates further recognize that inclusion interacts with broader understandings of disability and functioning. WHO frameworks emphasizing dynamic interactions among health, environmental, and personal factors reinforce the need to consider both individual supports and systemic barrier removal (WHO, 2002; Bickenbach & Bickenbach, 2009). Nevertheless, the overarching implication remains consistent: inclusive education requires coordinated reforms that reshape the ordinary structures of schooling so that diversity becomes a resource rather than a problem (Stubbs, 2008; Rouse, 2012).

In sum, the global trajectory from segregation to integration and toward inclusion is best understood not as a linear replacement of one model by another, but as a contested and uneven reform pathway shaped by shifting disability paradigms, legal milestones, and persistent institutional constraints. This historical and conceptual foundation provides the basis for examining national trajectories, particularly Ethiopia's, where multiple models frequently coexist and where policy commitments may outpace implementation capacity. The Ethiopian trajectory can be read through this same layered reform pathway, but with distinctive sequencing, actor roles, and capacity constraints that shape how models coexist in practice.

2.2.2. Ethiopia's Transition toward Inclusion for Students with Disabilities

Ethiopia's trajectory toward inclusion reflects both alignment with global reform movements and distinctive national pathways shaped by resource constraints, institutional capacity, and the historical role of non-state actors. Early provision for CWDs was largely delivered through special schools founded by overseas missionaries and local philanthropic organizations, with initial emphasis on learners with visible sensory impairments. Institutions such as the Mekanisa School for the Deaf (1943) and the Alpha Deaf School (1947) represent early landmarks, followed by expansion through facilities such as the Sebeta Residential School for the Blind (1963) and the Hosahna Residential School for the Deaf (1981). These developments widened access for specific groups but largely reflected a segregated model of service delivery, establishing a parallel system that later reforms had to engage rather than simply replace.

A later phase introduced more integrative arrangements within regular schooling. Education for children with intellectual disabilities began through special classes at Kokebe Tibeha Regular Primary School in Addis Ababa during the late 1980s, marking a gradual shift toward school-based integration. Over time, special classes for learners with diverse disabilities were established in many regular schools. In practice, increasing numbers of students with a range of needs, including sensory impairments, motor disorders, learning difficulties, developmental disabilities, and behavioral and emotional challenges, began attending regular schools alongside peers without disabilities (Tirussew, 2005). Yet this expansion often occurred without comprehensive systems for early assessment, placement guidance, and sustained support. As a result, many schools remained under-resourced to provide the academic, psychosocial, and social supports necessary for meaningful participation and achievement, contributing to learning difficulties, distress, and elevated risks of dropout (Tirussew, 2005). Consistent with global critiques of integration, the Ethiopian case illustrates how 'being in school' can still fall short of genuine inclusion when pedagogy, resourcing, and school cultures remain largely unchanged.

More recently, Ethiopia has increasingly adopted the language and policy orientation of inclusion, including efforts to mainstream SWDs and expand special units and support structures within regular schools. The launch of the Special Needs Education Strategy Program (2006) is commonly identified as an important policy step in shifting discourse away from segregated and narrowly

integrative models and toward inclusion (Tirussew, 2005). Importantly, the Ethiopian landscape continues to reflect model coexistence: special schools, special units within regular schools, partial mainstreaming, full inclusion, and emerging "reverse inclusion" models where former special schools enroll SWDs (Tirussew, 2005). This coexistence underscores a central analytical point: national 'transition' is not a single policy event but a negotiated reform process shaped by capacity, community attitudes, and school-level organizational realities.

The unevenness of implementation is visible in persistent disparities in identification, resourcing, and support provision. Where systems for early identification and coordinated support are weak, inclusion risks becoming nominal, presence without participation and achievement. This is precisely why a C–P–P lens is analytically valuable for the Ethiopian case: it enables examination of how inclusive values are (or are not) embedded in school culture, how policies translate into guidance and resourcing, and how daily teaching and support practices enable or constrain meaningful participation.

Finally, Addis Ababa provides a strategically important site for studying inclusion because service concentration, institutional presence, and school diversity can create both greater opportunity and more visible implementation gaps. Where enrollment of SWDs is higher, the system's capacity to sustain inclusive cultures, policies, and practices becomes more testable and more consequential. Accordingly, examining teachers' perspectives and experiences in Addis Ababa can generate nuanced insights into the concrete barriers and enabling conditions shaping inclusion, thereby informing broader efforts to strengthen inclusive education nationally.

2.3. Dimensions of Inclusive Education Implementation in Primary Schools

The implementation of inclusive education in primary schools is a multidimensional and systemic process that is best understood through the interdependent framework of Culture, Policy, and Practice. Grounded in Booth and Ainscow's (2002, 2011) model, this approach posits that sustainable inclusion depends on coherence across three constitutive dimensions: ISC, which provides the foundational values, beliefs, and relational norms shaping attitudes toward diversity and disability; ISP, which translates these cultural commitments into formal rules, organizational

structures, and resource allocations; and ISPr, which encompass the pedagogical and organizational routines through which inclusion is enacted in everyday school life. Although analytically distinct, these dimensions are functionally interdependent: weaknesses or inconsistencies in one domain can undermine progress in others, whereas alignment across all three strengthens the depth, legitimacy, and sustainability of inclusive education. The C–P–P framework, therefore, offers a holistic analytic lens for examining how inclusion is negotiated, realized, or constrained within the complex ecology of primary schools, moving beyond technical compliance to foreground the dynamic interplay between normative, organizational, and practical realms. Accordingly, the subsequent sections elaborate on each of these dimensions in detail.

2.3.1. Inclusive School Culture (ISC): Concept and Core Features

Within the C–P–P analytic triangle, culture constitutes the foundational dimension because it shapes the interpretive conditions under which policy reforms are received and classroom practices become routinized. Policies and practices are unlikely to endure when they remain external prescriptions; they gain traction when they are internalized as "the way we do things here", that is, when they are embedded in shared meanings, expectations, and relationships that structure everyday school life. Culture is therefore central to the sustainability of inclusive education: it provides continuity and shared moral orientation, yet its relative durability also means it can become a site of resistance where inclusion is perceived to disrupt established norms, routines, or power relations.

Conceptually, culture may be understood as a relatively enduring system of shared ideologies, values, beliefs, traditions, and perceptions that develops over time within an organization and exerts a powerful influence on behavior and practice (Schein & Schein, 2017). In school settings, culture is not reducible to official inclusion rhetoric, nor to a temporary 'climate' captured by surface indicators. Rather, it reflects what members of the school community have come to take for granted as legitimate: what is valued, whose knowledge counts, how difference is interpreted, how conflicts are resolved, and how authority and resources are distributed (Hatzipanagiotou, 2008). Importantly, culture is not neutral; it can confer or contest power by shaping who is recognized as belonging, whose voice is treated as authoritative, and what forms of participation are judged legitimate. Schools also typically contain multiple, overlapping subcultures (e.g.,

leadership, staff, students, & parent communities) that may converge in some areas while diverging in others, with direct implications for inclusion and equity.

This conceptualization clarifies why culture is analytically prior to, and often more explanatory than, related terms such as ethos or institutional climate. Whereas climate may suggest a relatively malleable 'feel' of the school, culture captures deeper, historically sedimented and sometimes contested meanings through which school life is enacted and reproduced. Culture is therefore not merely what a school claims to be; it is continuously produced through everyday interactions, organizational routines, informal norms, and the distribution of recognition and resources.

A defining feature of culture is that it carries explicit and implicit rules for identifying "insiders" and "outsiders" and for determining appropriate responses to difference. In ISC, diversity is not approached as a deficit to be remediated or segregated, but as a normal condition of schooling that requires flexible participation structures, respectful relationships, and shared responsibility for learning. Such cultures are anchored in values that legitimate the presence and participation of all learners, including SWDs, and they cultivate relational practices that make belonging *experienced* rather than merely asserted. Conversely, where cultures are shaped by entrenched stereotypes, prejudicial expectations, or narrow norms of 'ability,' exclusion may occur through overt practices or subtle routines (e.g., lowered expectations, limited participation, marginalization in peer networks, etc), even when inclusive policies exist on paper (Stylianou, 2017). The absence of foundational values, such as respect for difference, empathy, equity, and dignity, thus constitutes a structural barrier to inclusion, while their cultivation serves as a key enabling condition for sustained change (Carvalho, 2022).

The internal structure of culture can be further clarified through the notion that the core element of organizational culture is its belief system, the underlying assumptions and perceptions that guide how members interpret events and decide what to do (Stergiovanni & Starratt, 1988, as discussed in Gerosimou, 2012). In schools, these belief systems are expressed through norms that shape teachers' pedagogical decisions, expectations of learner competence, and interpretations of 'fairness' and 'discipline.' Cultures of inclusion are therefore produced not only by the values teachers and school leaders say they endorse, but by the normative environment that authorizes particular teaching practices and forms of participation as legitimate (Angelidis, 2019). This is

why inclusive education is widely understood as a process of systemic transformation rather than a narrow technical intervention: it requires reconfiguring the cultural conditions that determine whether policies and practices are enacted coherently or fragmented in implementation.

Drawing on the *Index for Inclusion* framework, the cultural work of inclusion is commonly conceptualized through two mutually reinforcing emphases: (i) BC and (ii) EIV (Booth & Ainscow, 2011). A thriving inclusive community prioritizes the collective success of all its members and is characterized by cooperation, security, acceptance, and supportive relationships (Gerosimou, 2012). Inclusive values provide the moral and practical compass for decision-making, guiding how the school interprets diversity, allocates support, and responds to barriers to participation. When such values are collectively developed, communicated, and enacted, they become the shared frame through which policy and practice decisions are evaluated, thereby strengthening coherence and sustainability.

Because culture is co-produced by stakeholders, ISC cannot be reduced to the efforts of individual teachers alone. It is shaped through the collective contributions of teachers, school leadership, students, families, and external partners, and it influences not only institutional effectiveness but also the quality of social relationships and collaboration across the school community (Hatzipanagiotou, 2008). Leadership is therefore central to cultural change; however, contemporary scholarship emphasizes that leadership for inclusion is increasingly distributed rather than concentrated solely in the principal. Distributed leadership, where responsibility is shared across staff and, in developmentally appropriate ways, includes student voice, can strengthen inclusive reform by generating collective ownership and aligning practices with shared values (Angelidis, Georgiou, & Stylianou, 2009; Angelidis, 2019). In parallel, inclusive pedagogy requires systems that enable teachers to embrace responsibility for the learning of all students, with implications for professional learning, school organization, and broader policy supports (Ainscow & Sandill, 2010). Where such enabling conditions are absent, inclusive policy may remain symbolic, while everyday culture continues to reproduce patterns of marginalization.

Operationally, ISC in this study refers to the shared beliefs, attitudes, values, norms, and collaborative practices within a primary school community that foster a welcoming, equitable, and supportive environment for all learners, with particular attention to SWDs (Booth & Ainscow,

2011). Consistent with the study's analytical framework, ISC is examined through two sub-dimensions: BC for SWDs and EIV for SWDs. Together, these dimensions capture the cultural mechanisms through which recognition, participation, and belonging are enabled or constrained in the daily life of the school.

2.3.1.1 Building Community (BC) for Students with Disabilities

Building an inclusive community for SWDs constitutes a central relational sub-dimension of ISC because it captures the social architecture through which inclusive values are translated into everyday school life. Within the C–P–P framework, community-building functions as the relational infrastructure that enables inclusion to move beyond formal access and administrative placement toward substantive participation, recognition, and belonging (Booth & Ainscow, 2011). In this sense, an inclusive community is not an add-on to policy implementation; it is the medium through which policy becomes lived practice, through the quality of relationships, the norms governing participation, and the distribution of voice and responsibility within the school.

At its core, an inclusive school community is characterized by reciprocity, trust, cooperation, and shared responsibility among stakeholders: students, teachers, school leaders, parents, and relevant external partners. These relational networks create the social conditions through which learners participate meaningfully in both academic and social life. For SWDs, membership in such a community is strongly tied to the formation of positive learner identities and to socio-emotional well-being, which are themselves foundational for engagement, persistence, and learning (Ainscow & Sandill, 2010; Angelidis et al., 2009). Conversely, where school communities are fragmented, hierarchical, or shaped by deficit beliefs about disability, exclusion can be reproduced even under formally inclusive policies. In such contexts, inclusion often collapses into nominal placement: learners may be present in classrooms but remain socially peripheral, pedagogically under-participating, and institutionally unheard.

Inclusive community-building cannot be either automatic or sporadic. It requires an ongoing developmental approach, which involves the deliberate structuring of interaction among differences and the conscious reduction of social exclusion. Practices like cooperative learning, peer tutoring, budding system, structured peer mentoring programs, inclusive clubs,

extracurricular activities, and collaborative problem-solving practices offer chances for contact, contribution, and recognition. The relevance of these practices goes beyond merely offering assistance to SWDs; they involve changing the school's dominant culture by conveying to students the message that diversity is normal, involvement is communal, and that everyone's presence makes a difference in the school community (Booth & Ainscow, 2011). Furthermore, what is important to understand about community-building is that it is not solely about student interactions; it involves adults in the same way. Collaboration among teachers in planning lessons, co-teaching when possible, reflective conversations among teachers regarding obstacles to participation, and modeling respectful relationships stabilize the norms that govern inclusive relationships and ensure their continuity (Gerosimou, 2012; Stylianou, 2017). Where staff collaboration is weak or inclusion is individualized to a single SNE educator, community-building tends to be fragile, which is dependent on personal commitment rather than institutional routine.

Meaningful parental engagement is likewise integral to an inclusive community, particularly for SWDs whose learning trajectories are often shaped by the continuity or discontinuity between home and school. Inclusive communities cultivate respectful partnerships with families, not as passive recipients of school directives but as knowledge-holders and co-educators who can inform contextualized support strategies. Such engagement is most effective when it extends beyond attendance at meetings to include two-way communication, participation in planning, shared monitoring of progress, and collaborative problem-solving around barriers to attendance, learning, and participation. Attention to power relations is crucial here: schools must recognize that families of SWDs may be marginalized by stigma, unequal access to information, or prior experiences of exclusion. Relationally inclusive schools, therefore, design engagement mechanisms that are accessible, respectful, and responsive, enabling families to participate without fear of blame or dismissal (Ainscow & Sandill, 2010).

Leadership plays a pivotal role in enabling community-building as a school-wide cultural practice rather than a collection of isolated initiatives. Distributed leadership, through which teachers, students, and families are positioned as co-constructors of school life, supports shared ownership of inclusion and reduces the risk that decisions reflect only hierarchical priorities or narrow performance logics (Angelidis, 2019). In this configuration, school principals function as facilitators who build trust, create participatory structures (e.g., inclusive staff teams, parent

forums, student councils), and align organizational routines with inclusive norms. Leadership commitment becomes visible through what is prioritized, resourced, and monitored: time for teacher collaboration, explicit expectations for inclusive classroom participation, the recognition of inclusive practices, and the institutional response to exclusionary incidents. Where leadership commitment is inconsistent or symbolic, inclusive efforts may be reduced to procedural compliance rather than sustained relational change.

A defining marker of inclusive community is the creation of opportunities for SWDs to express their views and participate meaningfully in both academic and social life. This extends beyond consultation to the conditions that make voice consequential: accessible communication pathways, respectful listening practices, and routines that translate student perspectives into adjustments in teaching, peer support, classroom norms, and wider school practices. Participation is thus conceptualized as both a right and a practice, supported through pedagogical strategies that enable SWDs to contribute, make choices, and assume roles in classroom and school activities. When SWDs are positioned as active participants rather than passive beneficiaries, community-building reinforces recognition, agency, and belonging, strengthening the cultural foundations of inclusion (Booth & Ainscow, 2011).

Conflict and tension are inevitable in pluralistic communities and should not be interpreted as indicators of failure. Inclusive school communities are distinguished by their capacity to engage disagreement constructively through dialogue, reflection, and institutional learning. Differences in expectations—about disability, discipline, fairness, and achievement—often surface in the course of inclusive reform. When addressed openly and ethically, such tensions can function as productive moments that clarify values, expose barriers, and support collective problem-solving (Ainscow & Sandill, 2010). Where tensions are suppressed or handled through blame, schools risk reinforcing stigma and deepening exclusionary dynamics.

In contexts such as Ethiopia, where inclusive education is supported through policy commitments emphasizing access and equity, building inclusive communities is particularly consequential. Policy direction is necessary but insufficient: without supportive relational networks and shared cultural commitment, inclusion risks remaining administrative—focused on placement and attendance rather than participation, recognition, and belonging. This risk is often intensified in

low-resource settings, where constraints in specialist provision make relational resources, including staff collaboration, peer solidarity, family–school partnerships, and ethically grounded leadership, especially critical enablers of participation (Booth & Ainscow, 2011; EADSNE, 2012 cited in Väyrynen & Paksuniemi, 2020). Sustained, participatory community-building embedded in everyday school life is therefore central to realizing inclusion as a social practice rather than an aspirational policy goal.

Operationally, in this study, BC for SWDs is examined through relational indicators that capture the extent to which the school enables inclusive membership and participation: (i) the quality and consistency of staff collaboration around inclusive planning and problem-solving; (ii) the presence and effectiveness of peer support structures that reduce isolation and enable mutual participation; (iii) meaningful parental engagement as partnership in planning, communication, and support; (iv) visible and sustained leadership commitment that aligns routines, resources, and accountability with inclusive norms; and (v) concrete opportunities for SWDs' voice and meaningful participation in academic learning and social life. Together, these indicators illuminate how community functions not only as a supportive environment but as a cultural mechanism through which inclusion becomes durable, lived, and institutionally sustained.

2.3.1.2 Establishing Inclusive Values (EIV) for Students with Disabilities

Establishing inclusive school values constitutes the second core sub-dimension of ISC because it provides the moral and interpretive foundation through which disability is understood, educational worth is recognized, and belonging becomes possible for SWDs. Within the Culture–Policy–Practice framework, inclusive school development is conceptualized as an interdependent process of change across cultures, policies, and practices, with culture functioning as the value-laden infrastructure that shapes what schools treat as legitimate, expected, and possible for learners (Booth & Ainscow, 2011). Inclusive values are therefore not decorative ideals appended to 'real work'; they are the orienting commitments that structure everyday judgments about curriculum, pedagogy, assessment, leadership, relationships, and resourcing (Booth & Ainscow, 2011; Booth, 2011). In this study, the operationalization of establishing inclusive values for SWDs emphasizes a shared commitment to equity, fairness, and respect for diversity, including promoting positive

peer interactions, maintaining discrimination-free environments, fostering self-confidence among SWDs, and holding high expectations for all learners.

This value base is decisive because inclusion is not a technical intervention or a discrete programme; it is the disciplined work of putting inclusive values into action across the routine life of the school (Booth, 2011). The analytical implication is that school commitments to inclusion cannot be evaluated primarily through policy statements or formal placement decisions. Rather, they must be examined through the value assumptions embedded in ordinary decisions: what the school counts as achievement, whose participation is treated as legitimate, how learning difficulties are interpreted, and whether barriers to learning and participation are addressed as institutional responsibilities or individualized deficits (Booth, 2011; Booth & Ainscow, 2011).

A central risk, especially in policy climates shaped by targets and accountability pressures, is that inclusion becomes performative rather than principled. Booth cautions that when inclusion is not anchored in deeply held values, it can collapse into a "fashion statement" or an "image of compliance," where institutions appear inclusive while everyday routines continue to reproduce exclusion (Booth, 2011). For SWDs, this distinction is decisive: the same placement in a regular school can yield radically different lived experiences depending on the operative value system. Where deficit assumptions remain culturally dominant, schools may normalize lowered expectations, conditional participation, and narrow definitions of success. By contrast, where inclusive values are active, difficulties are interpreted as signals to redesign teaching, relationships, and environments rather than as evidence of learner inadequacy. Booth's insistence on recognizing "all the achievements of all" is particularly significant in this regard because it challenges standards-driven constructions of success that marginalize learners whose progress may not be captured by conventional benchmarks (Booth, 2011).

Booth further argues that values are not peripheral to school improvement but constitute the moral substance of schooling itself. Values underlie actions, practices, and policies, and can be read as moral arguments about what is considered right, worthwhile, and legitimate in education (Booth, 2011). EIV therefore requires that they be made explicit, discussable, and usable as criteria for judgments in school development. This is not straightforward: values are complex, may be disputed, and may conflict, and clarifying values often brings disagreements into the open (Booth,

2011). Yet this is precisely why values-work is necessary: it enables schools to identify contradictions between what they claim to value and what their routines reproduce under pressure, strengthening cultural coherence and guiding principled change over time (Booth, 2011).

Within this cultural work, Booth and Ainscow articulate inclusive values as centrally concerned with equality, rights, participation, community, respect for diversity, and sustainability, complemented by relational and humanistic values such as compassion, honesty, trust, non-violence, courage, joy, hope, and beauty (Booth & Ainscow, 2011). These are not symbolic labels but commitments that imply concrete educational responsibilities. Participation, for example, is defined as more than physical presence; it entails active engagement, collaboration, involvement in decision-making, and recognition of multiple identities such that individuals are accepted for who they are (Booth, 2011). Rights express membership in a common humanity, including children's entitlements to a broad education, appropriate support, and attendance at their local school (Booth, 2011). Booth's emphasis on honesty and joy further reasserts education, including inclusive education, as the enhancement of the human spirit through joyful engagement in teaching, learning, and relationships, resisting the cultural narrowing effects of managerialism and high-stakes testing (Booth, 2011).

It is important to note that the value of inclusivity gains meaning through its practice. According to Booth, the Index for Inclusion makes it clear that development is to be considered a participatory process involving dialogue, collaboration, reflective criticism, and solidarity, and is to take place with involvement of the children, young persons, and their families as they discuss life in schools instead of being an inspection or competitive process (Booth, 2011). This approach can be corroborated by findings indicating that, in practice, teachers need considerable time to make inclusion values tangible. Väyrynen and Paksuniemi posit that inclusion education necessarily is value-driven, and such a process requires a culture in schools that appreciates participation in learning, play, teamwork, and participation in decision-making concerning the activities in the school community (Väyrynen & Paksuniemi, 2020). The authors add that transforming inclusive values into teaching practices is not easy but involves engaging values and constant discussion, especially when teachers feel challenges in relating inclusion principles with their professional practice (Väyrynen & Paksuniemi, 2020).

Finally, EIV must be understood as work undertaken under constraint. Booth documents how schools pursuing inclusive cultures, policies, and practices often have to navigate policy tensions, where "soft" inclusion initiatives are contradicted by "hard" policies that privilege competition and selection (Polat, 2011). In such conditions, the disciplined practice of making values explicit and linking them to action becomes a strategic capacity: it clarifies the interpretive frame through which new initiatives are understood, guides decision-making under pressure, and sustains attention to long-term development rather than short-term image management (Booth, 2011). For SWDs, the implication is both analytical and practical: inclusive values operate as a protective cultural resource only when they are collectively owned, routinely mobilized to interpret dilemmas, and translated into stable routines that reduce barriers to learning and participation.

In the Ethiopian context, where inclusive education is promoted through formal policy commitments framed around equity and access, the establishment of inclusive values is particularly consequential. Policy frameworks may prioritize enrolment and the provision of supports, yet their effectiveness depends substantially on whether ethical and cultural commitments are internalized at the level of schools and classrooms. Without such grounding, inclusion risks being interpreted narrowly as physical placement rather than meaningful participation, recognition, and learning. International competency frameworks, including the *Profile of Inclusive Teachers*, underscore the centrality of this cultural work by positioning valuing learner diversity, collaborative practice, and sustained reflective engagement as core professional commitments that underpin inclusive schooling (EADSNE, 2012, cited in Väyrynen & Paksuniemi, 2020).

From a research perspective, EIV provides a productive analytic lens for PhD-level inquiry into the sociology and micro politics of institutional change. Empirical studies can examine how value statements are interpreted, enacted, negotiated, or resisted in everyday school routines, and how these micro-level processes aggregate into durable cultural patterns that either widen or constrain participation. Centering the perspectives of SWDs is especially important, since their experiences provide a stringent test of whether inclusive values translate into lived belonging and recognition, rather than symbolic compliance. Ultimately, the cultivation of inclusive values extends beyond procedural compliance and represents a dynamic and contested process that requires persistent

efforts to align inclusive principles with everyday practices, enabling educators to pursue alternative and more equitable approaches despite structural constraints (Polat, 2011)

2.3.1.3 Manifestations and Challenges of Inclusive School Culture

ISC becomes empirically visible through the patterned ways a school recognizes, relates to, and organizes participation for SWDs (Booth & Ainscow, 2011). Culture is not reducible to formal statements of intent; it consists of shared meanings, value orientations, and normative expectations that guide everyday conduct and are reproduced through routines, rituals, symbols, and habitual interaction (Schein & Schein, 2017). These cultural elements shape identity formation, the experience of belonging, and members' sense of satisfaction, making culture a primary site where inclusion is either normalized as "how we do school" or contested through implicit exclusionary norms (Slee, 2011). Accordingly, the literature suggests that inclusive culture is sustained when it mobilizes the entire school community, including teachers, students, parents, and leaders, around collaboration, shared practices, a favorable psychosocial microclimate, and structured opportunities for success in which every learner is visible, capable, and valued (Booth & Ainscow, 2011; Ainscow & Sandill, 2010).

A. Manifestations of an Inclusive School Culture for SWDs

An inclusive school culture manifests first through the social and institutional visibility of SWDs in meaningful ways (Booth & Ainscow, 2011). Beyond mere enrolment, SWDs participate actively in classrooms, assemblies, clubs, leadership roles, and school-wide public events (Ainscow & Sandill, 2010; Booth & Ainscow, 2011). Such visibility functions as a cultural signal, communicating who belongs naturally in the community, whose participation is expected, and whose presence is legitimate (Schein & Schein, 2017). In practice, SWDs assume roles of responsibility, contribute to group work, and are recognized through awards, showcases, or public acknowledgment of their achievements. School communications, including noticeboards, newsletters, announcements, and assemblies, narrate disability inclusion as part of the school's identity rather than as an exceptional or charitable gesture (Booth & Ainscow, 2011; Schein & Schein, 2017).

Accessibility constitutes a second key manifestation when normalized as a core condition of school life (Booth & Ainscow, 2011; UNESCO, 2017). Inclusive schools treat physical, communicative, and informational accessibility as anticipated requirements rather than discretionary accommodations. Barriers are identified proactively, and learning spaces, materials, and information are designed to be usable by all students. Accessibility in such contexts is not only technical but also a moral and relational commitment, shaping the feasibility and dignity of participation for SWDs (Booth & Ainscow, 2011; UNESCO, 2017). Equitable participation in decision-making and leadership further exemplifies inclusive culture (Booth & Ainscow, 2011). Structured participation formats, accessible student councils, inclusive class meetings, and role rotation in collaborative activities allow SWDs to influence rules, norms, and decisions affecting their learning (Lundy, 2007; Booth & Ainscow, 2011). Their contributions are not only solicited but treated as consequential, reflecting the democratic premise that no learner should be left aside (Lundy, 2007; Booth & Ainscow, 2011).

A favorable psychosocial microclimate characterized by respectful interaction, emotional safety, and dignity-oriented communication is central to ISC (Ainscow & Sandill, 2010; Booth & Ainscow, 2011). For SWDs, relational safety reduces stigma, supports self-expression, and enables sustained participation (Ainscow & Sandill, 2010; Slee, 2011). In culturally inclusive schools, empathy, patience, and respect are socially reinforced, while exclusionary behaviours such as teasing, ridicule, bullying, and social isolation are actively addressed (Slee, 2011; Ainscow & Sandill, 2010). Staff collaboration and the routinization of shared inclusive practice are also defining features of ISC (Ainscow & Sandill, 2010; Booth & Ainscow, 2011). Inclusion is sustained through collective professional learning, joint planning, problem-solving, and dissemination of effective strategies (Ainscow & Sandill, 2010; Angelidis et al., 2009). Collaboration among general teachers, SNE personnel, and leaders is reinforced when parents are engaged as partners (Booth & Ainscow, 2011; Ainscow & Sandill, 2010). Mechanisms such as seminars, peer observations, open lessons, and structured experience-sharing institutionalize inclusion, ensuring consistency and resilience in practice (Ainscow & Sandill, 2010).

Finally, inclusive culture is evident in the deliberate creation of 'success situations" and the celebration of diversity (Booth & Ainscow, 2011). Success situations are structured opportunities for learners to demonstrate competence, experience achievement, and receive recognition, thereby

countering deficit narratives and reinforcing identity and belonging (Florian & Black-Hawkins, 2011). Diversity is celebrated through school rituals, displays, storytelling, and public recognition, positioning difference as valued and ordinary, embedding inclusion in the school's collective identity rather than as a compliance-driven requirement (Booth & Ainscow, 2011).

B. Challenges and Constraints in Developing Inclusive School Culture for SWDs

Despite these positive manifestations, ISC is difficult to develop due to deep-seated norms, structural pressures, and resource constraints (Ainscow & Sandill, 2010; Slee, 2011). Tokenistic visibility may showcase SWDs in events without fostering genuine belonging or influence (Slee, 2011). Deficit beliefs and low expectations among staff or peers can subtly restrict access to challenging learning, leadership roles, and social participation (Slee, 2011). Weak collaboration or reliance on individual teachers leaves inclusive practice fragile and inconsistent (Ainscow & Sandill, 2010).

Unsafe microclimates and exclusionary peer norms may persist unless relational safety is actively reinforced (Slee, 2011; Ainscow & Sandill, 2010). Rigid classroom routines, inaccessible communication, and narrow assessment practices can maintain exclusion under the guise of normality (Booth & Ainscow, 2011; Florian & Black-Hawkins, 2011). Framing accessibility as 'special help' rather than a matter of justice leads to inconsistent accommodations and heightened stigma (UNESCO, 2017; Booth & Ainscow, 2011). Leadership instability and performance-driven pressures may prevent protection of time for collaboration or the modeling of inclusive norms, making inclusion largely symbolic (Angelidis, 2019; Ainscow & Sandill, 2010). Finally, limited parent–school engagement due to stigma, mistrust, or inaccessible participation mechanisms undermines the relational infrastructure critical for sustaining inclusive culture (Booth & Ainscow, 2011; Ainscow & Sandill, 2010).

2.3.2. Inclusiveness of School Policy (ISP): Concept and Policy Enactment

Inclusive education depends not only on inclusive values and classroom-level adaptations, but also on the extent to which education systems and schools convert inclusive principles into binding institutional commitments that shape everyday decisions about participation, learning, and support. In this sense, policy operates as the system's authoritative 'rule-setting' environment: it

defines what counts as legitimate provision, clarifies obligations and duty-bearers, and establishes the procedures through which responsibilities and resources are distributed. Policy, therefore, comprises the normative and administrative instruments, such as laws, rules, regulations, guidelines, and plans, through which actors allocate resources, coordinate roles, and institutionalize expectations for practice (Konstantinos et al., 2023). Because inclusion spans curriculum, assessment, pedagogy, infrastructure, staffing, and school–community relations, inclusive education policy is inherently multi-level and multi-actor; it requires coherence across system tiers and meaningful engagement of schools and local communities in implementation (Ainscow, 2020; Alexaki et al., 2022; Konstantinos et al., 2023). Where coherence is weak, inclusive education risks remaining a symbolic commitment that coexists with administrative routines and accountability regimes that reproduce exclusion.

In this study, the focus is not on policy in the abstract but on the inclusiveness of existing policy frameworks as they are interpreted, enacted, and institutionalized at the school level. Inclusiveness of School Policy (ISP) refers to the extent to which a school's formal commitments, such as rules, plans, guidelines, working documents, and resourcing decisions, are deliberately configured to secure equitable access, participation, and achievement for SWDs. Crucially, policy inclusiveness is not demonstrated by the mere existence of written documents; it becomes visible in how policy moves through the institution and is translated into routinized decision-making. This includes how policy is interpreted (what school actors understand as required), communicated (how expectations reach teachers, learners, and parents), financed (whether commitments are accompanied by usable resources), implemented (whether school routines align with stated obligations), monitored (whether progress and compliance are reviewed), and coordinated (whether roles and support pathways function coherently across leadership, teachers, and support structures). In this way, ISP mediates between inclusive values (culture) and classroom enactment (practice), converting normative commitments into role clarity, enforceable expectations, and workable support arrangements that structure everyday school life. When ISP is strong, inclusion is less dependent on individual goodwill; when ISP is weak, inclusion becomes discretionary, uneven, and vulnerable to leadership turnover, resource shocks, and competing priorities.

This conceptualization is anchored in the *Index for Inclusion: Developing Learning and Participation in Schools* (Booth & Ainscow, 2000, 2002, 2011). Within the Index, the dimension

"Producing inclusive policies" is articulated through two sub-dimensions: "Developing the school for all" and "Organizing support for diversity." Together, these emphasize a dual requirement: policy must orient the school as a whole toward inclusion, while also establishing organizational arrangements that render inclusion practicable and educationally meaningful (Booth & Ainscow, 2000, 2002, 2011). Consistent with this framework, and with the study's analytic priorities and context, ISP is operationalized through teachers' perspectives of two interrelated dimensions: PAI and OS for the Inclusion of SWDs. The first captures whether teachers understand the intent of inclusive policy frameworks, internalize the expectations placed upon them, and experience school-level mechanisms that translate policy into clear routines. The second captures whether schools coordinate staffing, expertise, materials, referral pathways, and support structures in ways that enable teachers to implement inclusion without carrying the burden individually.

Against this conceptual background, the section proceeds in four steps. It first outlines Ethiopia's policy foundations for inclusive schooling. It then examines policy awareness and implementation at the school level, analyzes how support is organized to operationalize policy intent, and synthesizes how policy inclusiveness becomes visible in practice, including the recurrent constraints that weaken enactment. This structure reflects the premise that inclusion is realized not through declarations alone, but through routine school processes such as planning, budgeting, supervision, collaboration, and support, which ultimately enable or constrain participation and learning.

2.3.2.1. Policy Foundations for Inclusive Education in Ethiopia: International and National Frameworks

To situate ISP analytically, it is necessary to outline the policy foundations that define what schools are expected to do and what teachers are likely to recognize as legitimate inclusive obligations. International frameworks consolidate inclusive education as a rights-based commitment grounded in non-discrimination and equal opportunity, while national legal and policy instruments translate these commitments into constitutional guarantees, sector policies, strategies, guidelines, and programmatic mechanisms that structure implementation (Ainscow, 2020; Alexaki et al., 2022; Konstantinos et al., 2023). These foundations matter for ISP not merely because they exist as formal texts, but because they establish the authorizing environment within which schools interpret

responsibility, define priorities, and justify resource choices (Konstantinos et al., 2023). They can also constrain school-level enactment where obligations are under-specified, weakly enforced, or disconnected from financing and capacity development (Ainscow, 2020; Alexaki et al., 2022). Accordingly, policy foundations shape whether inclusion is experienced as a non-negotiable institutional duty or as an aspirational agenda pursued when conditions permit.

Accordingly, this sub-section proceeds in two steps: it first reviews major international instruments that have consolidated inclusive education as a global norm and shifted the focus from placement-oriented integration to system transformation, and then examines how Ethiopia has domesticated these commitments through constitutional provisions, education and training policies, sector development programs, and implementation instruments that shape school-level enactment.

2.3.2.1.1. International Policy Frameworks Promoting Inclusive Education

Over the past three decades, international policy frameworks have progressively reframed inclusive education from a welfare-oriented aspiration into a binding, rights-based obligation. Foundational instruments such as the *Universal Declaration of Human Rights* (1948, Article 26) and the *Convention on the Rights of the Child* (1989, Articles 2 and 23) established education as a universal right and affirmed non-discrimination principles, including for CWDs. The *World Declaration on Education for All* (1990) further foregrounded the imperative of access for marginalized learners, positioning exclusion as a systemic failure rather than an individual misfortune.

A decisive normative shift emerged with the *Salamanca Statement and Framework for Action* (UNESCO, 1994), which asserted that "regular schools with an inclusive orientation are the most effective means of combating discriminatory attitudes, creating welcoming communities, and achieving education for all" (p. ix). Importantly, Salamanca advanced inclusion as a reform agenda for mainstream schooling rather than a placement-oriented approach that inserts SWDs into unchanged institutional arrangements. This normative trajectory acquired explicit legal force through the UN CRPDs (2006). Article 24 obligates States Parties to ensure an inclusive education system at all levels without discrimination, including through reasonable accommodation and the dismantling of segregationist arrangements. General Comment No. 4 (2016) further clarifies that

inclusion is not reducible to access or integration; it requires transformation in culture, policy, and practice across educational environments (UN Committee on the Rights of Persons with Disabilities, 2016). Complementing these developments, Sustainable Development Goal 4 commits states to "inclusive and equitable quality education," reinforcing inclusion as a global development priority and a measure of education system quality (UNESCO, 2015).

Analytically, these international instruments are consequential for ISPs because they establish enforceable standards against which national frameworks and school-level enactment can be assessed. First, they define exclusion and segregation as discriminatory, thereby positioning inclusion as a non-optional obligation rather than a discretionary welfare initiative (UNCRPD, 2006; UN Committee on the Rights of Persons with Disabilities, 2016). Second, they frame inclusion as a matter of system design, requiring adjustments in curriculum, assessment, teacher development, infrastructure, financing, and accountability, rather than the mere placement of learners within unchanged classrooms (UNESCO, 1994; UN Committee on the Rights of Persons with Disabilities, 2016). Third, they foreground the institutional work required to realize rights in practice, emphasizing that schools must adapt enabling policies and organize support structures so that participation and learning are secured through routine procedures rather than symbolic access (UNESCO, 2015; United Nations, 2006). These principles provide the benchmark for interpreting Ethiopia's national policy commitments and the conditions under which schools can translate policy into inclusive practice.

2.3.2.1.2. Ethiopia's Legal and Policy Frameworks for Promoting Inclusive Education

Ethiopia's national policy landscape reflects the domestic translation of international inclusion commitments, although the coherence and enforceability of obligations vary across constitutional provisions, sector policies, programmatic documents, implementation guidelines, and financing mechanisms (MoE, 2016; UNESCO, 2009; World Bank, 2017). For the purposes of ISP, the critical question is not only whether national instruments endorse inclusion, but whether they generate implementable duties at school level. This includes clear responsibilities, enforceable expectations, workable coordination mechanisms, and adequately resourced support arrangements through which schools can secure access, participation, and achievement for SWDs (UNESCO, 2009; Ainscow, 2020; Alexaki et al., 2022).

Within Ethiopia, the policy environment for inclusive education can be read across interconnected layers. At the constitutional level, rights and equality provisions establish a general basis for non-discrimination and access to publicly funded services, while the incorporation of ratified international instruments strengthens the legal footing for inclusion (FDRE Constitution, 1995; UNCRPD, 2006). At the sector policy level, education and training policies and related strategies articulate goals for equity and inclusion and establish system expectations for curriculum responsiveness, teacher preparation, and institutional capacity (MoE, 1994; MoE, 2023). At the programmatic level, sector development plans and quality improvement programs operationalize policy through targets, implementation structures, and resourcing mechanisms that influence what schools can realistically do (MoE, 2010; MoE, 2015a; World Bank, 2017). Finally, implementation guidelines and professional standards translate policy intent into clearer roles, procedures, and support modalities, such as resource centers, itinerant support, assistive technologies, and school-level planning tools, thereby shaping the administrative routines through which inclusion is enacted (MoE, 2016; MoE, 2015c).

When Ethiopia's policy architecture is viewed holistically, an evolving contradiction between rights and resources becomes evident: expanding rights-based commitments are repeatedly mediated by the resource, capacity, and governance conditions that determine whether inclusive obligations can be enacted coherently at the school level (MoE, 2016; UNESCO, 2009). Ethiopia's legal and policy environment reflects a growing commitment to equity and inclusion, articulated through constitutional provisions, sector policies, program frameworks, and implementation guidelines. Yet this architecture remains structurally tensioned, as policy frameworks frequently expand expectations without simultaneously institutionalizing the financing, staffing, training, assistive provision, and supervisory routines through which schools can realistically deliver on those expectations (MoE, 2016; UNESCO, 2009).

For ISP, the central analytic issue is, therefore, not merely whether inclusion is endorsed in formal texts, but whether policy instruments generate implementable school-level scripts: clarity regarding who is responsible for what, the procedures that guide action, the support that is practically available, and the mechanisms through which compliance and progress are monitored. Ethiopia has translated international inclusion commitments into a multi-layered policy architecture spanning constitutional law, sectoral policies, programmatic plans, and operational

guidelines; however, the critical question for ISP is how these layers structure responsibilities, resources, coordination, and support in ways that render inclusion actionable within everyday school administration.

This review therefore analyses Ethiopia's national frameworks through four interlinked layers, including foundational legal commitments, strategic directives, programmatic drivers, and operational frameworks, each shaping what schools can legitimately recognize, plan for, and implement as inclusive policy in everyday practice.

A. Foundational Legal Commitments: The Constitution and its Ambiguities

The 1995 Constitution establishes a dual foundation for inclusive education. On the one hand, it provides a strong formal mechanism for incorporating international human rights norms into domestic law. Article 9(4) confirms that ratified international agreements "are an integral part of the law of the land," and Article 13(2) requires legislative, executive, and judicial organs to interpret constitutional rights in conformity with the Universal Declaration of Human Rights, the International Covenants on Human Rights, and other international instruments adopted by Ethiopia. These provisions create a constitutional pathway through which disability and inclusion norms embedded in ratified instruments may be operationalized within the domestic legal order.

The Constitution also supports inclusion indirectly through equality and social rights provisions. Article 25 guarantees the right to equality and prohibits discrimination, offering a constitutional basis for contesting exclusion in education even though disability is not explicitly specified in the education-related clauses. Article 41(3) recognizes every Ethiopian national's right to equal access to publicly funded social services, including education, while Article 90(1) commits the state, "to the extent the country's resources permit," to pursue policies that provide all Ethiopians access to public health and education. Read together, these provisions provide a broad foundation for grounding inclusive schooling obligations in principles of equal access and non-discrimination.

At the same time, disability-related commitments are framed through a welfare-oriented and resource-contingent logic that introduces ambiguity into enforceability. Article 41(5) obliges the state, "within available means," to allocate resources for the rehabilitation and assistance of "the physically and mentally disabled," and Article 90(1) similarly qualifies social provision by

reference to national resources. The repetition of these resource-conditional clauses creates interpretive space for limiting the scope, pace, and consistency of implementation.

In policy-to-practice terms, this conditionality is consequential because it can normalize inclusion as desirable but negotiable. Where obligations are expressed as contingent, inclusive education may be pursued unevenly, shaped by fiscal cycles, external project support, and discretionary prioritization, rather than being routinized through planning, budgeting, supervision, and accountability. For ISP, the constitutional framework thus operates dually: it enables inclusion through equality guarantees and incorporation of international standards, while simultaneously constraining enforceability through resource-qualified commitments that can weaken the translation of rights into consistent school-level duties and support arrangements.

B. Strategic Policy Directives: The Education and Training Policies (1994, 2023)

Ethiopia's Education and Training Policies (ETPs) constitute a critical strategic intermediary through which constitutional commitments to equality and social rights are translated into sectoral priorities, institutional roles, and implementation expectations. For ISP, these policies matter not only because they state intentions, but because they shape the authoritative 'policy script' that schools reference and enact in practice: what inclusion is understood to mean, who is responsible for what, which procedures are legitimate, and whether support is positioned as a routine institutional obligation or as an optional add-on. A comparative reading of the 1994 and 2023 ETPs indicates a pronounced discursive movement from a welfare-oriented and special-education framing toward a broader systemic inclusion language. Yet, this evolution remains undercut by enduring operational ambiguities and a consequential lack of specificity regarding school-level duties, producing an enactment gap in which strategic ambition fails to convert into routinized and accountable practice within mainstream schooling.

- **The 1994 ETP: Foundational Recognition within a Segregated Policy Logic**

The 1994 ETP was a foundational reform framework designed to address access, quality, relevance, and equity through a structured hierarchy of general objectives, specific objectives, and operational strategies. At the level of general objectives, the policy advances a universalist access commitment, aiming to develop the "physical and mental potential" and "problem-solving capacity" of individuals by expanding education and, in particular, by providing "basic education

for all" (General Objective 2.1.1) (MoE, 1994, p. 7). Although disability is not named explicitly in this objective, its Universalist language provides an interpretive basis for including learners with disabilities within the policy's access mandate.

More explicitly, the policy identifies disability at the level of specific objectives. Specific Objective 2.2.3 commits the system "to enable both the handicapped and the gifted to learn in accordance with their potential and needs" (MoE, 1994, pThe access gap is most acute at the local level; this localized structural exclusion forms the foundational problem for this study.. 9). This is significant because it recognizes learner diversity and affirms that provision should respond to differentiated needs. At the same time, the terminology ("handicapped") reflects the dominant deficit-oriented lexicon of the period and signals an orientation that locates the 'problem' of educational exclusion in the learner's impairment rather than in inaccessible system structures that constrain participation, accessibility, and achievement.

This conceptual orientation is reflected in the policy's operational strategies, which largely channel disability into a parallel track of provision. Strategy 3.2.9 states that "there will be special education and training for persons with special needs" (MoE, 1994, p. 17), and Strategy 3.4.11 adds that teacher training for special education will be provided within regular teacher training programs (MoE, 1994, p. 22). These strategies establish the legitimacy of disability-related support but do so primarily through the institutional logic of special education, rather than through a clear mandate for mainstream schools to reorganize curriculum, assessment, pedagogy, and school routines in ways that normalize inclusion.

Importantly, the strategies that could have functioned as mainstream inclusion levers remain either generic or silent on disability. Curriculum and textbook development (Strategy 3.1.3) stresses sound pedagogical and psychological principles and alignment with international standards (MoE, 1994, pp. 12–13), but it does not specify curriculum differentiation, accessibility design, assessment accommodations, or instructional adaptations for learners with disabilities. Language policy (Strategy 3.5.1) promotes mother-tongue instruction in nationality languages as both a pedagogical advantage and a rights claim (MoE, 1994, p. 23), yet this logic is not extended to the linguistic rights of deaf learners through recognition of Ethiopian Sign Language, a critical omission that preemptively excludes deaf children from the policy's own equity framework.

Resource-related provisions likewise remain under-specified. Strategies on support inputs and financial assistance (including 3.7.6, 3.7.7, and 3.9.4) repeatedly call for "special attention" and targeted support (MoE, 1994, pp. 29–32), but provide limited guidance on identification of needs, equitable allocation, or accountability for ensuring that resources reach learners facing disability-related barriers.

From an ISP perspective, the net effect is a fragmented policy script: disability is acknowledged at the objective level, but operationalized mainly through segregated or parallel provision. Mainstream schools receive limited policy guidance on how inclusion should be institutionalized through routine planning, teacher deployment, classroom-level support, assessment practice, and school leadership accountability. Under such conditions, inclusion risks becoming discretionary, uneven, and dependent on individual initiative rather than embedded in predictable institutional routines.

- **The 2023 ETP: Systemic Ambition and the Persistence of Operational Ambiguity**

The 2023 ETP signals a substantial discursive and strategic shift toward a more contemporary orientation. It foregrounds equity, inclusion, accessibility, capacity building, curriculum differentiation, and enabling infrastructure as central pillars of sector improvement. Notably, the policy explicitly commits to "equitable, inclusive and accessible education and training" as a guiding principle (Article 5.1) and mandates that curricula accommodating "students with disabilities and special learning needs" be prepared and implemented (Article 4.5.1) (MoE, 2023). These provisions represent a clear movement away from categorical separation toward an understanding of inclusion as a system responsibility that must be expressed through core instruments of curriculum and institutional planning.

The policy also acknowledges the enabling conditions required for inclusion beyond classroom-level effort. It links inclusive education to institutional standards, resource inputs, expert capacity development, stakeholder cooperation, and budgetary support (Articles 5.1 and 5.5) and emphasizes the importance of infrastructure and facilities to create equitable and accessible learning environments (Article 7.3) (MoE, 2023). In principle, these commitments strengthen the idea that inclusion is a governance and resourcing task, not solely an instructional challenge.

However, from an ISP standpoint, the key question is whether these systemic commitments are translated into sufficiently specific school-level obligations and operational pathways. Here, important ambiguities remain. Crucially, the policy fails to resolve the fundamental contradictions carried from the constitutional level. It does not explicitly affirm inclusive education as a right, nor does it recognize Ethiopian Sign Language, thereby perpetuating a core barrier to access. Even where inclusion is affirmed as a policy goal, the mechanisms through which schools are expected to enact it, including precise role definitions, procedural requirements, support coordination models, accountability routines, and financing channels, are left vague. Where the "how" of implementation is unclear, schools are likely to experience inclusion as a broad expectation without an accompanying operational script: what must be planned, what must be budgeted, which actors must coordinate, what minimum supports must exist, and how compliance and progress will be monitored. In such conditions, inclusion can remain uneven, shaped by local leadership priorities, variable capacity, and the availability of external projects, rather than institutionalized through stable routines. This persistent enactment gap, evident in the 2023 policy's operational ambiguities, necessitates a critical examination of the infrastructure meant to translate policy into practice, actionable school mandates.

Read together, the 1994 and 2023 ETPs reflect both evolution and a persistent core problem. The 1994 ETP provides early recognition of disability within national objectives but largely channels response through a special education logic, leaving mainstream inclusion under-specified. The 2023 ETP advances a more systemic and contemporary inclusion discourse, highlighting curriculum differentiation, institutional capacity, and infrastructure as key levers. Yet, the comparative insight for ISP is that discursive progress does not automatically produce enactment: unless strategic commitments are operationalized into clear, routinized, and accountable school-level expectations that are embedded in planning, budgeting, supervision, and coordinated support, schools may continue to experience inclusion as aspirational and negotiable rather than as a non-discretionary institutional responsibility.

This enactment gap is analytically central to ISP because it directly shapes teachers' everyday experience of policy: whether inclusion is supported by coherent procedures and predictable structures, or whether it is relegated to individual effort under conditions of ambiguity and variable

resourcing. The policy script, therefore, remains fundamentally incomplete, authorizing inclusion in principle while withholding the specific directives necessary to ensure its consistent practice.

C. Programmatic Drivers of Inclusion: ESDPs, GEQIP, and the Tension Between Ambition and Enactment

Within Ethiopia's multi-layered education policy architecture, the Education Sector Development Programs (ESDPs) and the General Education Quality Improvement Program (GEQIP) function as the sector's primary programmatic machinery for translating strategic commitments into operational realities. These instruments do not merely 'support' inclusion; they actively govern its implementation by defining priorities, structuring budget lines and delivery platforms, and establishing the indicators through which performance is monitored and sanctioned (World Bank, 2013; World Bank, 2022). From an ISP perspective, their central significance lies in whether they generate predictable resource streams and institutional routines that schools can operationalize, or conversely, institutionalize a pattern of symbolic compliance where inclusion is rhetorically affirmed yet functionally disabled in everyday school practice by a lack of actionable means.

- **The ESDP Trajectory: From Marginal Visibility to Mainstreamed Integration and Its Uneven Institutionalization**

The ESDP sequence shows a discernible, though uneven, progression in how disability inclusion is positioned within sector planning, reflecting an ongoing struggle to convert policy language into governing authority. Early phases, specifically ESDP I (1997/98–2001/02) and ESDP II (2002/03–2004/05), primarily advanced a broad access-and-quality reform agenda. Equity was framed largely through expansion, efficiency, and teacher development, while disability remained minimally specified and weakly programmed. Analytically, this early programmatic invisibility is consequential. It institutionalized a planning logic in which disability inclusion was absorbed into generic equity language, a logic that tended to result in weak budgeting, supervision, and translation into school-level routines, thereby establishing a legacy of ambiguity that later phases had to overcome.

A more explicit turn occurred in ESDP III (2005–2010), which linked disability inclusion to concrete initiatives such as the 2006 Special Needs Education (SNE) Strategy and curriculum differentiation guidance (MoE, 2005). Yet this phase also illustrates a recurring governance

weakness: policy recognition expanded faster than the accountability architecture. The absence of clearly measurable outcome targets fundamentally limited the program's coercive power, undermining the translation of intent into enforceable expectations. For ISP, clarity is not only normative but also administrative. Without specific targets and assigned roles, the policy script remains too vague for schools to enact.

ESDP IV (2010/11–2014/15) is often presented as a significant turning point in Ethiopia's inclusive education agenda because Special Needs Education (SNE) was formally embedded as a cross-cutting issue within the broader education sector. The plan introduced measurable targets related to enrollment, teacher training, and the expansion of resource centers (MoE, 2010; 2015a; 2016). On paper, this appeared to reposition inclusion from a marginal concern to a system-wide responsibility. Yet the realities inside schools told a more complicated story. By 2013/14, only about 4% of the estimated population of CWDs at the primary level had enrolled, exposing persistent barriers linked to identification procedures, physical access, and institutional support mechanisms (MoE, 2015a; 2016). The policy language expanded faster than the system's capacity to respond.

ESDP V (2015/16–2019/20) pushed this agenda further by abandoning the separate program and mainstreaming inclusion across all major priorities (MoE, 2015a). However, despite reported growth in enrollment, participation remained strikingly below expectations. By 2018/19, enrollment reached only 11% against a target of 61%. ESDP VI (2020/21–2024/25) introduced assistive technologies and digital learning initiatives, yet questions remain about whether such reforms can survive within the everyday resource limitations that continue to shape regular school practice.

- **The GEQIP: From Quality Inputs to Equity-Oriented, School-Level Inclusion Instruments**

Running in parallel, GEQIP has evolved as a major financing platform. GEQIP I (2008–2012) concentrated on system-wide quality inputs like teacher development (World Bank, 2013). GEQIP II (2013–2018) broadened to include accessibility and targeted grants for disability services (World Bank, 2022).The most explicit equity-oriented shift occurs in GEQIP-E (2017–2022), which operationalizes inclusion through direct, school-level resourcing mechanisms, such as

grants for Inclusive Education Resource Centers (IERCs), assistive technologies, and infrastructure adaptation (World Bank, 2017). For ISP, these instruments are potentially transformative, as they create tangible pathways for resources to reach the school level. However, they also risk reinforcing a project logic, creating pockets of innovation dependent on donor cycles rather than sustainable state budgeting, thus perpetuating uneven coverage.

- **Synthesis: The Structural Nature of the Rights-Resources Implementation Gap**

Taken together, ESDPs and GEQIP demonstrate the ongoing but incomplete construction of an inclusion infrastructure within Ethiopia's programmatic logic. Yet a structurally embedded contradiction is evident across all phases: programmatic ambition has consistently outpaced the development of implementation capacity. While the state has been adept at setting progressive targets, it has been markedly less systematic in ensuring the predictable flow of specialized resources, training, and supervisory support required to achieve them. Consequently, schools experience a fundamental disconnect: they are held accountable for inclusion in the absence of commensurate authority and resources, transforming policy into a cycle of ambitious planning and fragile enactment.

This gap is intensified by two programmatic tendencies. First, reliance on donor-dependent project interventions fosters geographic inequity and sustainability challenges. Second, monitoring frameworks that privilege access indicators over participation and learning quality risk reducing inclusion to a numerical exercise, masking ongoing exclusion within schools (UNESCO, 2009; MoE, 2016). The central ISP insight is, therefore, stark: programmatic evolution is a necessary but insufficient condition for change. Without closing the loop between targets and the routine, adequately resourced institutional supports required to achieve them, inclusive policy frameworks will continue to be experienced not as a practicable mandate, but as a recurring cycle of ambitious planning and fragile enactment.

D. Operationalizing Inclusion: Strategies, the Master Plan, and the Tension between Design and Enactment

Operational frameworks, including SNIE strategies, the Master Plan, and implementation guidelines, are the most proximate policy instruments shaping ISP because they specify roles, procedures, support modalities, and coordination arrangements that schools can convert into

routines (MoE, 2016). Ethiopia's SNIE strategies (2006; revised 2012; revised again in 2022) represent successive attempts to respond to implementation gaps and align the sector with inclusion commitments, increasingly emphasizing inclusion as a system responsibility and identifying priority areas such as workforce development, accessibility, resource provision, partnerships, information systems, and monitoring (MoE, 2016).

The translation of inclusive education commitments into routine school practice is mediated by Ethiopia's suite of operational frameworks. These include successive SNIE strategies issued in 2006, revised in 2012, and revised again in 2022, the Master Plan for SNIE for 2016 to 2025, and a set of implementation guidelines and professional standards. This operational layer constitutes the most proximate policy arena shaping ISP because it specifies responsibilities across administrative levels, defines procedures, and outlines support modalities that schools can convert into everyday routines. In effect, these instruments provide the actionable policy scripts through which the principle of inclusion is intended to become institutionalized practice (MoE, 2016). Their progressive evolution reflects sustained efforts to address implementation gaps. Yet this operational layer is itself a primary site of contradiction, as it simultaneously promotes the rhetoric of system-wide integration while structurally relying on parallel and specialist structures that shape how inclusion is interpreted and enacted in schools.

- **The SNIE strategy cycle: conceptual evolution and the persistence of operational gaps**

The introduction of the first SNE Strategy in 2006 marked a pivotal shift from fragmented and project-driven responses toward a more coherent national framework. Introduced during the implementation period of ESDP II, it aligned inclusive education with the *Education for All* agenda and contributed to mainstreaming special needs concerns within sector discourse (MoE, 2012b). It articulated a foundational principle that later reforms retained and strengthened, namely that all children are capable of learning, although many require differentiated forms and intensities of support to realize their potential (MoE, 2012b). In this respect, the 2006 strategy played an essential agenda-setting role by legitimizing inclusion as a system concern rather than a marginal activity.

At the same time, subsequent reviews identified weaknesses that fundamentally limited its operational force. These included limited attention to awareness-raising across system levels,

inadequate guidance on resource allocation, weak coordination within the Ministry of Education (MoE), and the absence of designated focal persons at zonal and woreda levels. Additional technical gaps were evident in screening and assessment tools, learning assessment practices for learners with special educational needs, attention to accessibility of learning environments, and integration of gender considerations. The cumulative effect was that the 2006 framework often functioned as a symbolic, normative statement rather than a robust and enforceable implementation script, thereby weakening the clarity and feasibility of the policy message reaching schools.

The 2012 SNIE Program Strategy was developed to address omissions and implementation constraints identified under the earlier framework and to strengthen alignment with evolving rights-based commitments, including Ethiopia's ratification of the CRPDs in 2010 (MoE, 2012a). It framed education as a fundamental human right and articulated the objective of building an accessible, equitable, and high-quality education system for children, youth, and adults with special educational needs, enabling fuller participation in social and economic development (MoE, 2012a). Compared with the earlier strategy, it clarified direction and strategic focus areas and provided a more coherent platform for stakeholder engagement and implementation planning. Its accompanying implementation guideline further strengthened its relevance for ISP by delineating a formal chain of accountability, including planning expectations, budget monitoring, capacity building, deployment of itinerant support, and facilitation of assistive devices and technologies.

Persistent implementation challenges, alongside the dynamic evolution of inclusive education practice and the need to align with national planning instruments, contributed to the adoption of a further revised strategy in 2022 (MoE, 2022). The 2022 strategy articulates an overarching objective of ensuring that all children with special needs benefit from accessible, appropriate, and high-quality inclusive education. It identifies priorities that speak directly to school-level enactment conditions, including strengthening the workforce and administrative system, improving accessibility, leveraging technology, adapting curricula, strengthening information management, ensuring adequate resource allocation, deepening stakeholder collaboration, and strengthening monitoring and support systems (MoE, 2022). It also signals an intent to standardize responsibilities through guidelines that clarify shared duties across administrative levels. Across the 2006, 2012, and 2022 cycles, a clear trajectory of incremental refinement is visible, yet it is a

progression consistently shadowed by a capacity gap that shapes what is feasible in schools and how inclusive policy frameworks are experienced in practice.

- **The Master Plan and Specialized Guidelines: Building the Architecture of Support**

The Master Plan for SNIE for 2016 to 2025 complements the strategy cycle by providing a longer-horizon framework and an architecture-oriented approach to system readiness. Rather than focusing primarily on policy intent, it emphasizes the institutional prerequisites for sustained enactment and seeks to strengthen the structures and environments that enable inclusion. The Master Plan is organized around six pillars: development of a policy framework, establishment of structural and administrative systems, strengthening of human resources, improved access and quality, reliable reporting systems, and financing mechanisms for inclusive education (MoE, 2016). For ISP, its significance lies in foregrounding governance, reporting, and financing as non-negotiable conditions of implementation, thereby linking inclusion not only to normative commitment but also to institutional capacity.

This architecture is operationalized through detailed guidelines and standards that translate strategy into concrete expectations for schools and local administrations. Guidance on curriculum differentiation and individualized education programs provides a pedagogical blueprint for adapting instruction, learning materials, and assessment to diverse learner needs, linking inclusion to the core work of teaching and learning (MoE, 2015b). The guideline for establishing and managing Inclusive Education Resource Centers sets out procedures for creating and operating institutional support hubs intended to provide assistive devices, specialized materials, and technical guidance (MoE, 2015b). Professional standards for SNE teachers define competencies related to professional knowledge, professional practice, and professional engagement, creating benchmarks for training, performance evaluation, and career development (MoE, 2015a). While these instruments provide essential operational direction, their specificity and separation from general teacher standards and school management manuals can inadvertently embed a structural division, whereby inclusion is governed through an auxiliary framework rather than being fully embedded within the core operational systems governing all schools and teachers.

- **Synthesis: operational clarity, structural siloing, and the mediation of policy**

Taken together, the strategy cycle, the Master Plan, and the operational guidelines represent a substantial and expanding policy infrastructure for inclusion. They progressively clarify responsibilities, routinize coordination, and specify support modalities that schools can convert into written plans, predictable procedures, and organized systems of support. For ISP, such operational clarity is a necessary precondition for moving from ad hoc responses to routinized institutional practice.

However, the operational layer also embodies a core tension that fundamentally mediates school-level enactment. While later strategies increasingly present inclusion as a shared system responsibility, operational mechanisms often rely on specialist guidance, dedicated resource centers, and a designated support cadre. This reliance may be pragmatically necessary for capacity building, yet it risks institutionalizing the very separation that inclusive philosophy seeks to overcome. When inclusion is governed primarily through parallel guidelines and specialist arrangements, it may be perceived and experienced as a specialist annex to the mainstream system rather than as a whole-school mandate, thereby marginalizing inclusion from core school improvement planning, everyday pedagogy, and mainstream accountability mechanisms.

In addition, the effectiveness of these scripts is frequently constrained by implementation conditions. Their operational force can be diluted by weak dissemination, limited local adaptation, unpredictable resourcing for inputs such as itinerant support and assistive technologies, and weak accountability linkages connecting school practice to higher-level oversight. Under these conditions, teachers and school leaders may experience inclusive policy frameworks as a top-down compliance demand without enabling support, rather than as a coherent and feasible institutional duty. The central insight for ISP is, therefore, that the sophistication of operational frameworks is necessary but insufficient. A policy script only gains authority when it is activated. Inclusion becomes durable only when these instruments are integrated into the core governance routines of ordinary schooling and matched with predictable resources, sustained capacity building, and consistent monitoring and support. Where such integration is achieved, inclusion can be routinized as collective responsibility. Where it is not, the policy-practice gap persists and inclusion remains vulnerable to uneven and fragile enactment (MoE, 2016; UNESCO, 2009).

Where policy ambition outpaces capacity, inclusion may be experienced by teachers as a compliance expectation without adequate institutional backing; where guidance and resources converge, inclusion becomes routinized as a collective school responsibility rather than an individualized teacher burden. This policy context, therefore, frames the empirical analysis of ISP that follows by directing attention to how teachers understand policy expectations and experience their implementation, and to whether schools organize the support structures required to operationalize inclusive intent in everyday practice, before synthesizing the manifestations and constraints that characterize policy inclusiveness in school life.

2.3.2.2. Policy Awareness and Implementation (PAI) for Inclusion

API constitutes the central mechanism through which inclusive education policy frameworks become meaningful, or remain symbolic, at the school level. From the perspective of the ISP, awareness extends beyond document familiarity to encompass teachers' understanding of their roles, responsibilities, entitlements, and procedural options. Implementation, in turn, is mediated by the institutional conditions that enable or constrain enactment, including leadership commitment, resource availability, clear guidelines, and accountability mechanisms (Kugelmass, 2006; Slee, 2011). The literature shows that weak policy awareness leads educators to interpret support as discretionary rather than obligatory, resulting in inconsistent practices reliant on personal goodwill (Ainscow, 2020; Waitoller & Artiles, 2013). Conversely, clear awareness of goals and pathways supports coordinated practice (Ainscow & Miles, 2008). In low- and middle-income contexts, these challenges are intensified by resource scarcity and competing priorities, often rendering policies formal but unevenly enacted (UNESCO, 2009; Iyassu & McKinnon, 2021).

Ethiopia exemplifies this problematic translation. Tesaka, Alemayehu, & Tilahun (2024) characterize its inclusive education landscape as policy-dense yet legally fragmented. The system hosts a proliferation of strategies and donor-supported programmes, notably the ESDPs) and the GEQIP, which rhetorically endorses inclusion (MoE, 2005, 2010, 2016; World Bank, 2013, 2022). However, this proliferation coexists with the absence of a binding national inclusive education policy and an education law. Consequently, practitioner awareness is shaped less by a coherent, codified entitlement and more through exposure to the project-oriented 'soft governance' of sector

plans and donor agreements. This results in awareness that is programme-facing rather than rights-facing; implementers may understand operational contours while lacking a foundational conception of inclusion as a non-negotiable legal claim that is a classic condition where policy remains an abstract commitment rather than an internalized obligation.

This governance configuration generates a persistent implementation fragility. As Tesaka et al. (2024) demonstrate, even where practitioners can identify key instruments, execution is slow and uneven, structurally constrained by the absence of 'hard' levers like enforceable standards and protected financing. This gap is not merely operational but foundational. Getahun's (2021) synthesis conceptualizes Ethiopia's IE challenges as a mutually reinforcing system of barriers, where attitudinal, pedagogical, curricular, and resource-based constraints interact to nullify policy intent. The core issue, therefore, is a structural governance gap: inclusion is articulated in 'soft' strategic documents while the 'hard' institutional prerequisites for its enactment remain systematically unsecured (Getahun, 2021; MoE, 2016). In such a context, teachers may endorse inclusion rhetorically while their daily routines remain shaped by examination pressures, rigid curricula, and deficit-based assumptions, as the policy is not integrated into the core improvement plans and performance expectations of schools.

This gap is exacerbated by procedural deficits in policy formulation. Tesaka et al. (2024) report uncertainty regarding the consultation of SNIE professionals during the drafting of the 2023 ETP. This epistemic exclusion means frontline implementers are peripheral to the policy-authoring community. As a result, directives are received as abstract, top-down impositions rather than as owned, actionable obligations. Inclusive education thus operates in an ecology of contingency, where outcomes for SWDs depend on variable administrative will and donor alignment, rather than being secured as a routine, legally guaranteed component of educational delivery. This study, therefore, treats policy awareness and implementation as a key empirical dimension of ISP, examining how teachers perceive the clarity, relevance, and feasibility of inclusive education policy frameworks, and how this fraught translation from intent to practice is mediated through school-level interpretation in Ethiopia.

2.3.2.3. Organizing Support (OS) for the Inclusion of Students with Disabilities

Inclusive education depends critically on how schools systematically organize support to address learner diversity. Within the ISP dimension, this moves beyond individual teacher goodwill to examine the institutional arrangements, including structures, roles, resources, and coordination mechanisms that enable inclusive practice (Booth & Ainscow, 2011). An effective support organization typically includes appropriately trained personnel, assistive technologies and adapted materials, functional assessment and referral systems, and sustained partnerships with relevant service providers. Where these elements are weak or poorly coordinated, inclusion risks collapsing into nominal placement, with teachers left to manage diverse needs without adequate system support (Ainscow et al., 2006; Florian & Black-Hawkins, 2011).

In Ethiopia, the organization of support is formally developed yet weakly institutionalized in practice. Tesaka et al. (2024) describe a multi-layered architecture comprising specialized administrative units, service modalities such as itinerant teachers, and professional instruments including Curriculum Differentiation (CD) guidelines and a nationwide network of Inclusive Education Resource Centers (IERCs) (MoE, 2012a, 2015b, &2016). The rapid expansion of IERCs reflects an effort to localize expertise and resources closer to schools (World Bank, 2023). However, Tesaka et al. (2024) emphasize persistent structural constraints, such as fragmented coordination, limited assessment and referral capacity, and the absence of sustainable incentives and career pathways for SNIE professionals that limit the functionality of this architecture.

These system-level constraints have direct consequences for classroom practice. Getahun's (2021) synthesis shows how institutional weaknesses translate into acute material scarcity (limited adapted learning materials, assistive devices, and accessible infrastructure) and constrained teacher competence. Under such conditions, support is delivered inconsistently and becomes highly dependent on individual initiative. The practical burden of adaptation is therefore displaced onto teachers and families rather than being absorbed through routine service delivery arrangements and system redesign, contradicting the principle of distributed institutional responsibility.

A further implication is the emergence of conditional or threshold-based inclusion. Tesaka et al. (2024) indicate that support is often effectively concentrated on learners whose needs align with

existing capacities, commonly students with sensory impairments or mild physical disabilities, while students with severe, multiple, or intellectual disabilities experience heightened risks of marginalization. Given a lack of on-site specialists, weak referral pathways, and scarce resources, inclusion is extended only up to the point where it requires substantial deviation from prevailing instructional routines or additional resourcing (Getahun, 2021; Tesaka et al., 2024). Beyond this threshold, exclusion is frequently normalized as an administrative constraint rather than treated as a contestable rights deficit. Accordingly, this study examines the organization of support as a core dimension of ISP, focusing on how the gap between formal design and functional capacity shapes the conditions for meaningful inclusion in Ethiopian schools.

2.3.2.4. Manifestations and Challenges of Inclusiveness of School Policy

The ISP becomes empirically tangible through institutionalized patterns of response to learner diversity. It is evident that schools demonstrate procedural coherence through clear, shared processes for identifying and supporting SWDs; collaborative infrastructure through routine coordination among teachers, specialists, and parents; and strategic alignment such that resource allocation, staff development, and school goals explicitly reinforce inclusive objectives. In such contexts, inclusion is experienced not as a special project but as an institutional norm embedded in daily practice (Slee, 2011; Waitoller & Artiles, 2013).

In Ethiopia, however, the extent to which such school-level manifestations emerge is shaped and often constrained by the wider national policy ecosystem. Tesaka et al. (2024) indicate that inclusiveness is expressed in the policy landscape primarily through cumulative textual and programmatic layering, including the integration of inclusive education within successive ESDPs, its framing as an equity objective under the GEQIP, the development of SNIE strategies and teacher standards, and the comprehensive architecture of the 2016–2025 Master Plan (MoE, 2016). These instruments signal sustained intention to address systemic barriers and to translate global commitments into national strategy.

Yet the translation of policy intent into coherent school practice is impeded by a synergistic system of challenges. A central structural limitation is reliance on ‘soft governance.’ While policy instruments proliferate, they are weakly supported by ‘hard’ levers such as a binding education

law, enforceable standards, and protected financing, rendering implementation discretionary and uneven (Tesaka et al., 2024). Getahun (2021) further conceptualizes how this policy weakness interacts with negative attitudes, limited teacher competence, an inflexible curriculum, economic scarcity, and physical inaccessibility to form a mutually reinforcing barrier system. Under these conditions, inclusion is more likely to take partial or selective forms, where gains in access may not consistently translate into meaningful participation, learning outcomes, and sustained support.

This policy–practice contradiction is particularly visible in the instructional core of schooling. Despite formal endorsements of adaptation, educators frequently encounter an inflexible national curriculum, weak or absent IEP practice, and material shortages that consolidate a structural hierarchy of inclusion (Getahun, 2021; MoE, 2012a; Tesaka et al., 2024). In turn, inclusive policy may be experienced as an added requirement within performance-driven routines, rather than as an enabling framework backed by practical support. The central impediment is therefore not the absence of policy intent, but the weakness of a resourced implementation infrastructure capable of connecting macro-level commitments to micro-level school capacity.

Accordingly, by synthesizing teachers' perceptions of policy awareness, implementation, and support organization, this study examines how ISP is experienced within this constrained ecology and how the gap between policy ambition and institutional conditions shapes the prospects for routinized, equitable practice. The next section, therefore, turns to the third dimension of the Culture–Policy–Practice framework, ISPr, to examine how inclusive principles are enacted in teaching–learning processes, assessment, and classroom interaction.

2.3.3. Inclusive School Practices (ISPr): Concept and School Routines

ISPr constitutes the operational core of inclusive education, translating inclusive culture and inclusive policy into routinized pedagogical and resource-provision arrangements within schools. ISPr captures the concrete ways inclusion is enacted in everyday schooling, including how teaching is organized, how learners participate, how learning is assessed, and how supports and resources are mobilized to enable equitable access and meaningful progress for SWDs. In this sense, ISPr bridges the normative commitments of inclusion and its lived reality, indicating

whether inclusion is institutionalized as an ordinary feature of schooling or reduced to nominal placement with limited participation and learning opportunity.

The literature emphasizes that inclusive practice requires intentional design that anticipates learner variability rather than treating difference as an exception addressed only after barriers emerge (Kaplan & Lewis, 2013; Booth & Ainscow, 2011). Such practice is strengthened through collaborative planning and shared responsibility for learner progress, alongside sustained engagement of parents and communities as partners in shaping relevant and responsive curricula (Kaplan & Lewis, 2013). Within this orientation, learners are positioned as active participants and co-constructors of learning, supported to develop critical thinking and reciprocal peer learning relationships (Booth & Ainscow, 2011).

A defining feature of ISPr is pedagogical flexibility: instruction and assessment are adapted to reduce participation barriers and expand access to curriculum goals (Alexaki et al., 2022). Strategies widely cited include UDL, differentiated instruction, collaborative teaching and co-teaching, and the development and implementation of IEPs (Ashokan, 2023; Bindhani & Gopinath, 2024; Rahmi et al., 2024). These practices are associated with improved belonging and reduced stigma, alongside learning gains for diverse learners when implemented coherently and sustained through professional learning and school-based collaboration (Tampubolon et al., 2023; Rahmi et al., 2024; Bindhani & Gopinath, 2024). Importantly, inclusive practice extends beyond academic instruction to encompass social and emotional well-being, including the cultivation of empathy, respect, and collaboration as routine features of school life (Singh, 2024).

2.3.3.1. Teaching–Learning Practices for Inclusion

Teaching–learning practices for SWDs reflect the instructional and assessment decisions through which teachers respond to learner diversity in real time. Inclusive teaching requires a shift from *one-size-fits-all* pedagogy to a responsive model in which lesson planning, delivery, and assessment are continuously adapted to learners' evolving needs (Lindner & Schwab, 2020; Rahmi et al., 2024). This entails purposeful planning that anticipates barriers, provides multiple access pathways, and allows instruction to evolve as evidence of learning emerges (Khazanchi & Khazanchi, 2021; Lindner & Schwab, 2020; Malata & Muzata, 2022).

A recurring manifestation of inclusive teaching is classroom organization that strengthens participation and peer support, including flexible seating, varied grouping arrangements, and structured peer-assisted learning (Pasira, 2022). Flexible grouping and tiered tasks enable learners to engage at appropriate levels of support and challenge, while modifications to the learning environment can reduce participation barriers (Pasira, 2022). Collaborative teaching and co-teaching further support responsiveness by enabling shared expertise and sustained instructional support for diverse learners (Ashokan, 2023; Iacono et al., 2023). When implemented coherently, these arrangements help position inclusion as a routine instructional norm rather than an individualized, ad hoc response. The reason why differentiated instruction is still essential is that it offers many different options for how students can access their content, learn, and prove their learning (Blaz, 2016; Lindner & Schwab, 2020; Pasira, 2022). Giving students more freedom when choosing which activities to do and how they will participate could be helpful in promoting agency and responsibility for their own learning, even in SWDs (Carter et al., 2011). In addition, inclusive teaching involves direct instruction with proper scaffolding.

Inclusive teaching is described by Finkelstein, Sharma, and Furlonger (2019) in five areas that interact: collaboration and teamwork (collaboration with peers, family, and community services); measuring progress (tracking the success of the program through IEPs, formative assessment, and various measurement strategies); instructional strategies (differentiation, participation, UDL, learner autonomy, peer interaction); organization strategies (classroom management strategies such as routines, transitions, modification of instructional materials, and managing time); social-emotional-behavioral support (supporting a positive classroom environment, creating explicit expectations, providing constructive feedback, encouraging motivation, and dealing with bullying and exclusion behaviors). Among these areas, inclusive assessments should be considered: different kinds of assessments and accommodations when conducting tests are necessary to provide fair and reliable results for SWDs (Ashokan, 2023; Rahmi et al., 2024).

2.3.3.2. Resource Provision (RP) Practices for Inclusion

RP practices address the availability, accessibility, and effective use of the human, material, and technological supports required to sustain inclusive participation and learning. These practices include access to specialized personnel and support services, such as SNE teachers, speech

therapists, and school counsellors, mobilized in response to learner needs (Florian & Black-Hawkins, 2011; UNESCO, 2017). Inclusive schooling also depends on the availability and pedagogically meaningful use of instructional and assistive resources, including adapted learning materials, assistive technologies, and specialized equipment that can reduce access barriers and strengthen engagement (UNESCO, 2017).

Accessible learning materials should be provided in multiple formats—including print, digital, and alternative formats—to accommodate diverse learning needs. Equitable participation also requires accessible school infrastructure and equipment, such as ramps, walkways, buildings, water facilities, and restrooms. Resource centers can support inclusion by providing and maintaining assistive resources, including braille materials, audio tools, wheelchairs, and other assistive technologies, while audiovisual and digital technologies offer alternative modes of representation that enhance engagement. Inclusive resource provision further requires communication supports such as sign language interpretation and assistive listening devices, alongside effective maintenance, equitable distribution, and integration of resources into everyday teaching and learning (Meyer, Rose, & Gordon, 2014; Šiška et al., 2020).

2.3.3.3. Manifestations and Challenges of Inclusive School Practices

Inclusive education is widely endorsed as a rights-based approach, yet its realization is tested in the instructional core of schooling, including what teachers do, how learners participate, how learning is assessed, and what supports sustain engagement and progress. Across contexts, manifestations of ISPr range from schools where inclusive teaching and support are normalized within daily routines to contexts where inclusion is reduced to nominal placement without meaningful participation or learning progress.

A recurrent manifestation, including in Ethiopia, is a participation gap within classrooms. Although policy commitments may signal inclusion at the system level, classroom practice often reflects limited differentiation and weak instructional responsiveness to learner diversity, producing patterns of "presence without participation" in which SWDs are enrolled but experience constrained access to instruction, assessment, and sustained support (Getachew, 2025; Beltran et al., 2025; Jabri et al., 2025). Accounts from Ethiopia describe inclusion as unevenly realized in

modern schooling contexts, with inclusion more visible as policy rhetoric than as stable teaching–learning routines (Getachew, 2025; Yorke et al., 2022). In such conditions, learners may be physically present yet remain marginal to instructional pacing, assessment regimes, and participation structures.

Manifestations of ISPr also vary by institutional form and schooling level. Ethiopian indigenous religious schools are described as demonstrating historically rooted, multi-grade arrangements where students learn together through routine co-learning rather than specialized intervention, offering a contrastive illustration of inclusion as everyday social participation (Getachew, 2025; Zelalem, 2014). Within formal schooling, inclusive practice is often stratified: primary grades may show more visible inclusion efforts, while secondary and higher education frequently face sharper deterioration due to intensified academic demands and more rigid subject structures (Getachew, 2025; Getahun, 2021). These conditions reduce instructional flexibility and increase the likelihood that learners requiring sustained adjustments are pushed to the margins of participation.

A further manifestation is the reliance on teacher improvisation under limited institutional support. Where professional services and formal resources are weak, inclusive practices are often sustained through personal teacher initiative, like informal differentiation, modified assessment tasks, peer support strategies, and ad hoc accommodations, rather than through routinized school-wide systems (Beltran et al., 2025; Getachew, 2025). While such ingenuity can enable localized inclusion, it also produces variability across classrooms and contributes to professional strain because adaptation is borne by individuals rather than absorbed through shared planning routines and predictable resourcing.

These manifestations are constrained by interdependent challenges at pedagogical, institutional, socio-cultural, and governance levels. Limited teacher preparedness, including insufficient training in inclusive pedagogy, curriculum adaptation, and the development and implementation of IEPs, remains a consistently documented barrier (Jabri et al., 2025; Getahun, 2021; Beltran et al., 2025). This is compounded by rigid curricula and assessment expectations that restrict flexibility for differentiation (Jabri et al., 2025; Getahun, 2021). Chronic resource limitations, such as inaccessible infrastructure, shortages of assistive technologies and adapted materials, limited

support staff, and constrained financing, further weaken the feasibility of sustained inclusive routines (Beltran et al., 2025; Getahun, 2021; Getachew, 2025).

Socio-cultural and attitudinal barriers constitute another major layer of constraint. Negative perceptions and stigma among teachers, peers, families, and communities are associated with exclusionary classroom climates, bullying, and reduced learner morale, undermining the relational conditions required for inclusive participation (Benson, Al-Natour, & Hussein Diaa, 2024). These constraints are intensified by weak collaboration among general and SNE personnel and limited school–family partnership (Beltran et al., 2025; Getachew, 2025). At the governance level, policy and reform processes are often characterized as top-down and insufficiently aligned with implementation realities, combined with weak enforcement and accountability mechanisms and disability data gaps that leave many learners unidentified and outside planned support systems (Beltran et al., 2025; Getachew, 2025; Benson et al., 2024). Together, these challenges produce an implementation environment in which ISPrs remain uneven, selective, and difficult to institutionalize as routine classroom and school practice.

2.4. Teachers' Perspectives on Inclusive School Culture, Policy, and Practice

Teachers' perspectives are central to how inclusive education is operationalized in schools because teachers do not merely implement policy; they interpret institutional expectations, judge feasibility in context, and adapt practice under real-world constraints. In this sense, teacher agency functions as the practical hinge between policy intent and classroom enactment, shaping whether inclusion becomes meaningful participation or remains largely symbolic (Booth & Ainscow, 2011). Across international and Ethiopia-relevant scholarship, a consistent pattern emerges: teachers tend to endorse inclusive values and relational commitments (culture) more readily than they can enact inclusive pedagogy and resourcing (practice), particularly where policy is weakly operationalized, and support systems are limited (Genovesi et al., 2024; Sánchez et al., 2019; Zabeli & Gjelaj, 2020). This pattern does not imply weak teacher commitment; rather, it points to the structural conditions that determine whether commitment can be translated into stable classroom routines.

2.4.1. Teachers' Views on Inclusive School Culture (ISC)

In the Index framing, ISC refers to the shared values, beliefs, and relational norms that sustain equity, belonging, and respect for diversity (Booth & Ainscow, 2011). Teachers frequently identify culture as the ethical and social foundation of inclusion, and empirical studies often report comparatively stronger endorsement of this dimension. In Kosovo, for example, 68.2% of teachers expressed support for building inclusive communities, framing cultural change as a feasible entry point for broader reform (Zabeli & Gjelaj, 2020). Similarly, in Ghana, principals and teachers emphasized inclusive admissions and staff sensitization as mechanisms for shifting attitudes and expectations toward learners with disabilities (Opoku-Nkoom & Ackah-Jnr, 2023).

However, the literature simultaneously documents a persistent culture–reality gap, in which professed commitments do not reliably translate into everyday peer relations, participation, and classroom interaction. In Indonesia, teachers voiced support for respect and inclusion, yet classroom observations revealed bullying and social exclusion of learners with special needs, underscoring how peer dynamics, implicit bias, and prevailing social norms can erode cultural commitments in practice (Budiarti & Sugito, 2018). Leadership is repeatedly identified as a critical condition for narrowing this gap: principals who model inclusive values, reduce hierarchical barriers, and institutionalize participatory routines tend to strengthen alignment between cultural ideals and classroom realities (Alexaki et al., 2022; Sánchez et al., 2019). Such a situation is quite evident in Ethiopia. In particular, teachers' attempts to foster inclusivity may be hindered by stigma, poor disability awareness, and a spiritual/moral conception of developmental disability, which determines how schools and the wider community view CWDs (Tsigie, 2022; Genovesi et al., 2024). As the above-mentioned evidence indicates, the development of a new culture of inclusion cannot be guaranteed merely by commitment to such policies as the SDGs; instead, it will involve implementing a well-designed whole-school approach to achieving inclusivity.

2.4.2. Teachers' Views on Inclusive Policy as an Enabling or Constraining Infrastructure

The perspective held by teachers about policy matters is usually based on the feasibility and enabling nature of such policy at the school level. According to the Index approach, an inclusive policy can be defined not only by national policies but also as the way schools operate in terms of resource distribution, coordination, role clarification, and minimizing barriers (Booth & Ainscow, 2011). Generally, the views of teachers about the policies were often presented as ambitious and yet poorly implemented. For example, in Kosovo, the level of trust in policies supporting inclusivity (60.6%) was less than their view of the inclusive culture, which was due to a lack of guidance and resources (Zabeli & Gjelaj, 2020). However, there are two recurring themes in the narratives. The first theme is that access does not necessarily lead to participation. This means that non-discrimination in admissions is not enough if the facilities lack accessibility, appropriate learning materials are not available, or expert assistance is lacking (Budiarti & Sugito, 2018; Opoku-Nkoom & Ackah-Jnr, 2023). Second, teachers stress the importance of contextualization, which is considered necessary for any initiative to be feasible.

Ethiopian studies underscore a pronounced policy–practice divide. Despite ratifying the UNCRPD and adopting national strategies such as the Master Plan for SSNIE (2016–2025), teachers often contend with fragmented enforcement, inconsistent guidance, and limited operational support at the school level (Genovesi et al., 2024). Requirements for formal diagnostic certification may inadvertently exclude learners where assessment services are scarce, while rigid, exam-driven curricula constrain pedagogical adaptation (Aemiro, 2025; Tsigie, 2022). From teachers' perspectives, inclusive policy becomes meaningful only when it is clearly communicated, predictably resourced, and embedded in everyday routines for planning, accommodation, and accountability, as these conditions directly shape what is feasible in classrooms and whether teacher agency can be sustained.

2.4.3. Teachers' Views on the Enactment of Inclusive Practices

Inclusive practices, including differentiated instruction, collaborative planning and teaching, adaptive assessment, and effective use of assistive resources, represent the most visible enactment

of inclusive culture and policy (Booth & Ainscow, 2011). Because these practices require sustained changes in daily pedagogy and classroom organization, teachers across contexts commonly identify practice as the hardest dimension to realize. Evidence from Ghana and Indonesia illustrates the practical constraints: attempts to adapt instruction are frequently undermined by limited training, scarce materials, and weak collaboration structures (Opoku-Nkoom & Ackah-Jnr, 2023; Budiarti & Sugito, 2018). Consequently, even where inclusion is endorsed in principle, the gap between intention and classroom reality remains pronounced (Fiuza-Asorey et al., 2021).

Ethiopian evidence suggests that the practical demands of inclusion are further intensified by gaps in teacher preparedness and enabling conditions. Teachers frequently report limited competence to support diverse learners, particularly those with developmental disabilities, often attributing this to pre-service preparation that is experienced as overly theoretical and insufficiently practice-based (Tsigie, 2022; Aemiro, 2025). These capacity gaps are compounded by systemic pressures, including large classes (often 50–80 learners), limited teaching materials, minimal access to assistive technologies, and the marginalization of special needs educators within schools (Genovesi et al., 2024). Concerns about safeguarding and safety, including bullying and injury risk, can further reduce teachers' willingness to include learners with high support needs when protective systems are weak or inconsistently enforced (Burningham et al., 2024). Under such conditions, inclusive practice often relies on improvisation and short-term coping strategies rather than stable, school-wide routines that consistently secure participation and learning.

2.5. Structural and Mediating Relationships Among Culture, Policy, and Practice

The preceding evidence is not merely descriptive; it indicates patterned relationships among the three Index dimensions. Teachers' accounts imply that culture, policy, and practice operate as an interdependent system rather than as separable domains. Culture often supplies ethical commitment, practice is the point of visible enactment, and policy is the institutional mechanism through which values are translated into workable routines and resourcing (Booth & Ainscow, 2000, 2002, 2011). Where this translation fails, inclusion may remain symbolically endorsed yet

operationally fragile, an outcome that is especially visible in contexts where expectations of teacher agency outpace the supports available to sustain it (Genovesi et al., 2024; Tsigie, 2022).

2.5.1. Interdependence of Culture, Policy, and Practice

Across studies, teachers' perspectives align with the Index for Inclusion's proposition that culture, policy, and practice are mutually reinforcing (Booth & Ainscow, 2000, 2002, 2011). Inclusive cultures can enable policy enactment by shaping collective expectations and relational norms; operational policies can resource and structure inclusive practice; and visible inclusive practices can normalize inclusive expectations over time. However, alignment is not automatic. A recurring pattern across contexts is that culture is often the easiest dimension to endorse, practice the hardest to enact, and policy the most vulnerable to becoming symbolic when under-resourced (Fiuza-Asorey et al., 2021; Sánchez et al., 2019; Zabeli & Gjelaj, 2020). This pattern suggests that inclusion depends on multiple supports functioning in concert rather than in isolation, and that partial interventions (e.g., training without resourcing, or policy without routines) are likely to yield fragile implementation.

2.5.2. Direct Culture–Practice Pathways

The evidence suggests a plausible direct pathway from inclusive cultural orientations to classroom enactment, but one that is fragile and contingent. In principle, teachers' endorsement of inclusive values can shape pedagogical choices that promote belonging, participation, and respectful interaction. In practice, however, culture–practice translation is often weakened by peer dynamics and hidden exclusionary norms. Indonesian classrooms, for example, showed bullying and social exclusion despite teachers' expressed commitment to inclusion (Budiarti & Sugito, 2018), indicating that cultural endorsement can coexist with practices that undermine participation. Similarly, in Spain, strong support for inclusion among teachers and families coexisted with uneven classroom integration, with learners receiving individualized support rather than full participation in shared instruction (Fiuza-Asorey et al., 2021). These findings imply that cultural commitment can shape practice directly, but it rarely produces durable pedagogical change without institutional mechanisms that make inclusive practice feasible and routinized.

2.5.3. Policy as a Mediator Between Culture and Practice

Taken together, the literature positions inclusive policy as a key mediating mechanism linking culture to practice. Where cultural commitments are translated into coherent procedures and resourcing, including clarified roles, accessible environments, specialist support, protected time for collaboration, and guidance for accommodation, teachers report greater feasibility for inclusive enactment (Opoku-Nkoom & Ackah-Jnr, 2023; Sánchez et al., 2019; Zabeli & Gjelaj, 2020). Conversely, when policy remains abstract, weakly communicated, or under-resourced, teachers experience inclusion as an individualized burden rather than an institutionalized routine, and practice becomes inconsistent or symbolic (Sánchez et al., 2019; Genovesi et al., 2024).

Ethiopian studies sharpen this mediating argument by highlighting the asymmetry between expectations placed on teachers and the support available to meet them. Ambiguous guidance, limited training, scarce materials, rigid curricula, and high learner–teacher ratios constrain what teachers can enact even when inclusive values are endorsed (Genovesi et al., 2024; Aemiro, 2025; Tsigie, 2022). Under these conditions, policy does not simply 'support' practice; it shapes whether teacher agency is practically possible. Strengthening inclusion, therefore, requires policy operationalization that is collaboratively localized with teachers, reliably resourced, and embedded in school routines for planning, accommodation, and accountability, alongside cultural initiatives that reduce stigma and safeguarding measures that protect participation (Burningham et al., 2024).

Generally, this review synthesis preserves the clarity of the Index for Inclusion–based three-part structure while clarifying the systemic logic implied across the literature: inclusion moves beyond formal enrolment only when cultural commitments, operational policies, and classroom practices converge to render teacher agency both feasible and sustainable (Booth & Ainscow, 2011).

2.6. Theoretical Framework of the Study

This study is grounded in an integrated theoretical framework designed to analyze inclusive education as a multi-level phenomenon shaped by foundational assumptions, school-level organization, and broader ecological systems. To move beyond descriptive accounts and explain the structural relationships among the core constructs—ISC, ISP, and ISPr—no single theoretical

lens is sufficient. Accordingly, the study integrates three complementary theoretical perspectives: disability models, the Index for Inclusion, and Bronfenbrenner's bioecological model.

Theoretical models of disability provide the philosophical foundation by shaping how educational systems conceptualize difference and responsibility, thereby informing how relationships among inclusive culture, policy, and practice are understood. The Index for Inclusion operationalizes these constructs at the school level, conceptualizing inclusion as a co-evolutionary process through which inclusive values and relational commitments are expected to translate into policy and practice. Bronfenbrenner's bioecological model situates these school-level processes within nested ecological systems, explaining how and why such translations are often disrupted across system levels. Taken together, this integrated theoretical architecture provides a coherent foundation for examining teachers' perspectives and for analyzing not only what teachers perceive, but also how and why inclusive education remains unevenly realized in primary schools in Addis Ababa.

2.6.1. Theoretical Models of Disability (Medical, Social, and Biopsychosocial)

Building on the conceptual models reviewed in Section 2.1.2, this study uses the medical, social, and biopsychosocial models as theoretical lenses for explaining how disability is likely to be interpreted and enacted through school culture, policy, and practice. These models do not function as mutually exclusive categories in school life. Rather, they provide analytically distinct mechanisms that can be used to interpret patterned variation in teachers' perceptions and to justify alternative pathways among the study's core constructs. In this sense, the models offer more than descriptive vocabulary; they supply theoretical expectations about how schools allocate responsibility for learning barriers, how policies are operationalized, and how inclusive practice is made feasible or constrained.

- **The Medical Model of Disability**

The medical model, grounded in a positivist epistemological paradigm, conceptualizes disability as an intrinsic pathology or deficit located within the individual learner (Thompson, 2016; Arndt & Van Beuren, 2013; Travis, 2015). Within this framework, difference is interpreted primarily through biomedical and psychological categories, positioning the learner as the site of impairment

rather than examining systemic or environmental contributors to exclusion. In school settings, this orientation tends to normalize diagnostic and remedial logics that prioritize identification, classification, and intervention targeted at the individual (McTigue, 2015; Bailey, Harris, & Simpson, 2015; Haegele & Hodge, 2016).

The model's theoretical contribution to the present study lies in the pathway logic it implies for culture, policy, and practice. A diagnostic and remedial culture is likely to support policies that emphasize categorization, standardized assessment, and specialized provision for students identified as having disabilities (Travis, 2015; Dewa et al., 2015). Such policies may institutionalize the assumption that difference should be managed through separation, pull-out support, or individualized therapeutic intervention, rather than addressed through systemic transformation. As a consequence, pedagogical practice tends to become individualized and deficit-focused, emphasizing one-on-one remediation, behavioral modification, and skill restoration aimed at normalizing the learner to conform to predetermined curricular expectations (Bailey et al., 2015; Haegele & Hodge, 2016).

From the perspective of teacher perceptions, the medical model positions teachers primarily as diagnosticians and implementers of specialist prescriptions rather than as reflective and adaptive pedagogues (McTigue, 2015; Haegele & Hodge, 2016). This can constrain professional agency by locating disability expertise outside the classroom, within medical or clinical domains. Teachers may therefore experience their role as reactive and compliance-driven, structured by diagnostic labels and procedural protocols rather than by pedagogical creativity and contextual judgment (McTigue, 2015; Haegele & Hodge, 2016). Although individualized support can be essential, an exclusive reliance on medicalized logics risks reinforcing social and academic exclusion by pathologizing difference and normalizing segregated practice within mainstream environments (Dewa et al., 2015; McTigue, 2015).

- **The Social Model of Disability**

In contrast, the social model of disability, first articulated by Oliver (1983), reframes disability as a socially constructed phenomenon emerging from environmental, attitudinal, and institutional barriers rather than intrinsic impairment. This paradigm shifts emphasis from 'fixing' the learner to transforming the contexts that restrict participation and learning (Oliver, 1983; Folguera, 2014).

For schooling, the model provides an explanatory mechanism that foregrounds barrier removal, accessibility, equitable participation, and shared responsibility among educators.

The social model also implies a mediated logic among the study constructs. An inclusive school culture that recognizes diversity as an educational asset provides the normative and ethical grounding for inclusion (Abrams, 2015). However, cultural commitment alone is insufficient; it must be translated into actionable structures through inclusive policy frameworks, which function as the institutional conduit between shared values and classroom enactment (Peacock, Iezzoni, & Harkin, 2015; Emong & Eron, 2016; Counts, 2015; Gallagher, Connor, & Ferri, 2014). Policies that prioritize accessibility, differentiated curricula, flexible assessment methods, and collaborative teaching provide formal mechanisms through which inclusive cultural commitments become tangible supports for teachers (Peacock et al., 2015; Emong & Eron, 2016; Folguera, 2014). By institutionalizing these commitments, policy frameworks legitimate and sustain inclusive teaching practices such as multi-modal instruction, peer-supported learning, and adaptive use of educational resources (Emong & Eron, 2016).

Within this logic, teachers' perceptions of policy are pivotal: supportive and clearly articulated policies can enable teachers to translate inclusive intentions into consistent classroom action, whereas ambiguous or exclusionary policies can undermine teacher agency and widen the gap between ethos and practice (Counts, 2015; Gallagher et al., 2014). The social model, therefore, provides theoretical justification for specifying policy as a mediating mechanism linking culture and practice: inclusive values shape policy design and enactment, and policy determines whether inclusive practice becomes feasible, routine, and sustainable (Oliver, 1983; Counts, 2015; Gallagher et al., 2014).

- **The Biopsychosocial Model of Disability**

The biopsychosocial model, foundational to the WHO's ICF, provides an integrative framework that conceptualizes disability as a dynamic interaction among biological, psychological, and social factors (WHO, 2001; Shakespeare, Watson, & Alghaib, 2016; Bath et al., 2014). Unlike the medical model's linear deficit logic or the social model's emphasis on structural barriers alone, this model conceptualizes disability as an emergent property of the interaction between functional capacity and the learning environment, mediated by social, cultural, and institutional contexts.

For the present study, the biopsychosocial model is theoretically valuable because it supports a reciprocal and co-constitutive understanding of culture, policy, and practice (Bath et al., 2014; Shakespeare et al., 2016; WHO, 2001). Inclusive culture can foster collaborative problem-solving and interdisciplinary coordination among teachers, leaders, and support staff, shaping the design of flexible policies that enable both universal and targeted supports. These policies can create the procedural conditions for adaptive classroom practices such as differentiated instruction, peer-assisted learning, and the integration of assistive technologies. In turn, observed outcomes of practice, including student engagement, achievement, and social participation, can feed back into ongoing refinements of school culture and policy, producing a cycle of continuous improvement.

At the level of teacher perceptions, the model legitimizes a dual-focus approach: teachers address individualized support needs while simultaneously applying universal design strategies to reduce environmental and structural barriers. This approach is particularly salient in resource-constrained contexts where teachers must negotiate complex classroom realities in which cultural norms, institutional expectations, and policy provisions intersect. Accordingly, the biopsychosocial model justifies conceptualizing relationships among culture, policy, and practice as bidirectional and mutually reinforcing, aligning with analytic approaches that seek to capture reciprocal influences within real-world schooling systems (Bath et al., 2014; Shakespeare et al., 2016; WHO, 2001).

- **Synthesis and Theoretical Positioning of the Study**

Collectively, these three models provide a conceptual apparatus for moving beyond descriptive accounts of teachers' perspectives toward explaining the structural interrelationships among inclusive school culture, policy enactment, and inclusive practices. The medical model aligns with a more unidirectional logic in which deficit-oriented cultures shape exclusionary policies that then determine segregated or remedial practices. The social model emphasizes the importance of defining policy as a mediating mechanism that translates inclusive cultural commitments into practical supports for the classroom. The biopsychosocial model extends this logic by underpinning a reciprocal and dynamic system in which culture, policy, and practice continually influence and reinforce one another.

Informed by these theoretical underpinnings, this investigation adopts a mainly social and biopsychosocial perspective on disability, conceptualizing inclusion as a systemic and

interactional process. This approach facilitates a thorough scrutiny of how conflicting institutional logics may be reflected in the perspectives of teachers in Addis Ababa and how these logics impact the viability and persistence of inclusive culture, policy, and practice in primary schools.

2.6.2. The Index for Inclusion as the Organizing Framework for Culture, Policy, and Practice

Building on the social and biopsychosocial understandings of disability outlined in Section 2.6.1, this study adapts the Index for Inclusion as the principal theory-informed school-level framework for operationalizing inclusive education. From a social model perspective, barriers to the inclusion of SWDs do not reside inherently within students but emerge through interactions with multiple aspects of schooling, including physical infrastructure, organizational arrangements, institutional procedures, pedagogical approaches, and the attitudes, values, and beliefs of the school community. Discriminatory school cultures, exclusionary policies, and restrictive practices, together with failures to identify and address these barriers, therefore constitute central mechanisms through which exclusion is produced and sustained in mainstream education.

To systematically examine and address these processes, Booth & Ainscow (2002, 2011) developed the *Index for Inclusion*, an empirically grounded framework designed to support schools in continuous inclusive education improvement. The Index conceptualizes and explains inclusion through three interrelated and co-evolving dimensions: *creating inclusive cultures*, *producing inclusive policies*, and *evolving inclusive practices*. These dimensions align directly with the core constructs examined in this study: ISC, ISP, and ISPr. Importantly, the Index frames inclusion not as a fixed outcome or compliance exercise, but as an ongoing, participatory process rooted in shared values, reflective practice, and contextual adaptation. By foregrounding the involvement of teachers, students, families, and communities, the framework positions inclusion as a collaboratively constructed endeavor rather than a top-down reform. Although originally developed as a framework for inclusive school development, the Index functions theoretically in this study by providing explanatory assumptions, organizing constructs, and relational logic concerning the interaction of culture, policy, and practice in inclusive education.

Within the Index, the culture dimension emphasizes the development of collaborative communities, shared inclusive values, and trust-based relationships among all members of the school. Such a culture provides the normative foundation for inclusion by legitimizing equity, respect for diversity, and collective responsibility, while also encouraging critical reflection on whether inclusive values are enacted in everyday interactions. The policy dimension translates these cultural commitments into formal structures, procedures, and accountability mechanisms. Inclusive policies define how resources are allocated, roles are clarified, and barriers are addressed, ensuring that teachers have both the authority and the institutional support to implement adaptive pedagogical strategies. These may include differentiated instruction, flexible assessment, collaborative teaching arrangements, the use of adaptive technologies, and peer-supported learning (Folguera, 2014; Peacock et al., 2015; Emong & Eron, 2016). The practices dimension encompasses the concrete pedagogical, curricular, and resource-related strategies through which cultural values and policy commitments are realized in daily school and classroom activities, shaping access, participation, and learning for all students, including SWDs.

A defining feature of the Index is its emphasis on the dynamic, co-evolutionary, and mutually reinforcing relationships among culture, policy, and practice. Inclusive cultures support the development of enabling policies, which in turn create the conditions for effective practices; successful practices subsequently reinforce and normalize inclusive cultural norms. Conversely, discriminatory cultures, weakly operationalized policies, or inflexible practices can undermine inclusion and sustain exclusion. This systemic logic provides a clear theoretical and analytical justification for the structural relationships examined in this study: school culture is expected to influence both policy and practice directly, while policy functions as a mediating mechanism between culture and practice.

From a teacher's perspective, the Index places educators as central agents in inclusive school development. Teachers are not passive recipients of externally imposed mandates but active agents in identifying barriers to learning and participation and in shaping responses to them. Through everyday interactions, teachers contribute to building inclusive cultures by welcoming SWDs as valued members of the school community, fostering respectful peer relationships, and promoting a sense of belonging. They also play a critical role in translating cultural commitments into operational policies by collaborating with school leaders, supporting inclusive planning processes,

and coordinating support services. In the classroom, teachers enact inclusive practices through adaptive pedagogy, flexible organization, varied assessment approaches, and the use of accessible learning materials and assistive technologies. Through this dual role as implementers and innovators, teachers contribute directly to the ongoing evolution of culture, policy, and practice, thereby enacting and sustaining the dynamic relational logic underpinning the Index for Inclusion (Booth & Ainscow, 2011).

2.6.3. Bronfenbrenner's Bioecological Model: Multi-Level Influences on Teachers and Schools

While the Index provides a robust framework for analyzing inclusive development within schools, inclusive education is shaped by wider social, institutional, and temporal contexts that extend beyond the school. To capture these broader influences, this study draws on Bronfenbrenner's Bioecological Model (1979, 1994), which conceptualizes human development and educational processes as products of dynamic interactions between individuals and nested environmental systems over time. Central to this model is the Process–Person–Context–Time (PPCT) framework, which highlights that teachers' perceptions and enactment of ISC, ISP, and ISPr are simultaneously enabled and constrained by influences operating across multiple systemic levels.

At the microsystem level, the classroom constitutes the immediate locus of inclusion, where teacher–student interactions, peer relationships, and day-to-day pedagogy shape students' participation and learning outcomes. This level aligns most closely with ISPr because it captures the observable enactment of inclusion in teaching, assessment, classroom organization, and support practices. The meso-system encompasses the linkages between microsystems, including relationships among teachers, families, school leaders, and community actors. These interconnections correspond to key dimensions of ISC, emphasizing that inclusion is sustained through coordination, trust, and shared understandings across settings.

The exosystem includes structures that indirectly influence schools, such as sub-city education offices, district administrations, and support agencies. Decisions at this level shape resourcing, professional development opportunities, and the implementation of school-level procedures, thereby influencing ISP and, indirectly, classroom practice even when teachers are not directly

involved in decision-making. At the macrosystem level, broader societal values, cultural beliefs about disability, national education policies, and legal frameworks define the normative and institutional boundaries within which inclusion is interpreted and enacted, shaping expectations of schools and teachers alike. Finally, the Chronosystem introduces a temporal dimension, recognizing that inclusion evolves through policy reforms, socio-economic shifts, and changing cultural understandings of disability, which together influence teachers' perceptions and school routines over time.

By locating the study's constructs within this ecological framework, it becomes clear that teachers' perceptions of ISC, ISP, and ISPr cannot be understood independently of context. Rather, these perceptions emerge through the interaction of proximal classroom processes with wider institutional, social, and policy environments. Bronfenbrenner's model therefore provides a conceptual basis for examining not only direct and mediated relationships among ISC, ISP, and ISPr, but also contextual influences that may moderate or amplify these relationships in primary schools in Addis Ababa.

From a teacher's perspective, the Bioecological model positions educators as central agents operating across interrelated systems. Teachers influence inclusion directly through instructional strategies, classroom management, and responsive support, while also engaging with families, colleagues, specialists, and school leaders to coordinate responses to learner diversity. At the same time, teachers navigate constraints and opportunities shaped by exosystem and macrosystem conditions, including resource availability, professional expectations, and policy mandates. Through these interactions, teachers function as both mediators and moderators of contextual influences on inclusive enactment.

Taken together with the disability models and the Index for Inclusion, Bronfenbrenner's Bioecological Model completes a multi-layered theoretical framework that integrates philosophical foundations, school-level organization, and ecological context. This integrated framework supports the examination of complex structural relationships, including direct effects of culture on policy and practice, the mediating role of policy, and reciprocal feedback from practice to culture. It therefore provides a rigorous theoretical basis for understanding how inclusive education is structured, enacted, and experienced in primary schools in Addis Ababa.

2.7. Conceptual Framework of the Study

This study builds its conceptual framework from the integrated theoretical foundation presented in Section 2.6. While the theoretical framework provides the broader philosophical and ecological justification for inclusive education, the conceptual framework narrows this into a structured analytical model that specifies the constructs to be measured and the relationships to be empirically tested. In doing so, it moves from abstract theory to an operational structure that can be observed, compared, and analyzed in real school settings. The framework is organized around three core constructs drawn from the Index for Inclusion: ISC, ISP, and ISPr. These constructs are treated as analytically separable, though practically intertwined, dimensions of inclusive education as experienced by teachers in regular primary schools. The unit of analysis is teachers' perceptions, since inclusion in this study is understood not only as institutional design but also as lived and interpreted practice within schools.

Inclusive School Culture (ISC) refers to the shared values, beliefs, and informal norms that shape how diversity, difference, and belonging are understood in a school. It is reflected in the everyday relational climate of the school—how teachers talk about students, how responsibility for every student is shared, and whether inclusion is treated as a collective obligation or an individual burden. In this sense, ISC captures the "taken-for-granted" environment in which inclusion is either supported or quietly undermined. Inclusive School Policies (ISP) also refer to the formal and semi-formal rules, procedures, and organizational arrangements that guide how inclusion is supposed to work in practice. This includes school-level guidelines, leadership directives, resource allocation practices, and accountability structures. Unlike culture, which is largely implicit, policy represents the more explicit institutional attempt to structure behavior and standardize expectations around inclusion.

Further, Inclusive School Practices (ISPr) refer to what actually happens in classrooms and school spaces. This includes how teachers adapt instruction, organize classrooms, assess students, collaborate with colleagues, and use available resources to support diverse students, including SWDs. ISPr is therefore the most visible layer of the framework, where policy intentions and cultural expectations become either real practice or remain largely rhetorical. The relationships among these three constructs (C-P-P) are guided by the Index for Inclusion, the social and

biopsychosocial models of disability, and Bronfenbrenner's Bioecological Model. Taken together, these perspectives suggest that inclusion is not a single-level phenomenon but a product of interaction between values, institutional structures, and everyday practice.

Within this study, the first hypothesis is that ISC has a direct influence on ISPr. Where schools have stronger shared commitments to equity, collaboration, and acceptance of diversity, teachers are more likely to engage in inclusive practices, even when formal systems are weak or inconsistent. Second, ISC is expected to influence ISP. In practical terms, school policies are rarely neutral documents; they are shaped by the dominant values and assumptions within the school. Where inclusive values and relational practices are strong, policies are more likely to reflect clarity, coherence, and support for inclusion. Where they are weak, policies tend to remain fragmented or poorly implemented. Third, and most centrally, the study proposes that ISP partially mediates the relationship between ISC and ISPr. This means that culture does not translate into practice automatically. Instead, part of its influence is channeled through policies that structure expectations, allocate resources, and define how inclusion is operationalized. At the same time, a direct cultural effect is retained, acknowledging that teachers do not always act through formal policy structures alone.

The framework also includes teachers' demographic and professional characteristics as background variables for comparative analysis. These variables are not part of the causal pathway and are not treated as predictors in the mediation model. Instead, they are used to examine whether perceptions of ISC, ISP, and ISPr vary across different teacher groups, thereby adding a descriptive layer to the analysis. Although the model focuses on ISC, ISP, and ISPr, it does not assume that these constructs operate in isolation. Schools are embedded within wider ecological systems, including leadership structures, resource constraints, administrative directives, and broader societal attitudes towards disability and inclusion. These contextual conditions are recognized as shaping the relationships in the model, even if they are not directly included as measured variables.

Methodologically, the conceptual framework functions as the organizing structure for the entire study. It determines what is measured, how relationships are tested, and how the quantitative and qualitative strands are integrated. Specifically, it guides the measurement of ISC, ISP, and ISPr, the testing of direct and mediated effects, and the qualitative exploration of how teachers describe

inclusion in practice and the constraints they encounter in their daily work. Figure 2.1 presents the resulting model. It shows the direct pathways from ISC to ISPr and ISP, the mediating pathway through ISP between ISC and ISPr, and the separate role of demographic and professional variables for comparative analysis. The qualitative strand is included as an interpretive layer, intended to explain how and why the statistical relationships observed in the model take the form they do in real school contexts.

Figure 2.1: Conceptual Framework of the Study

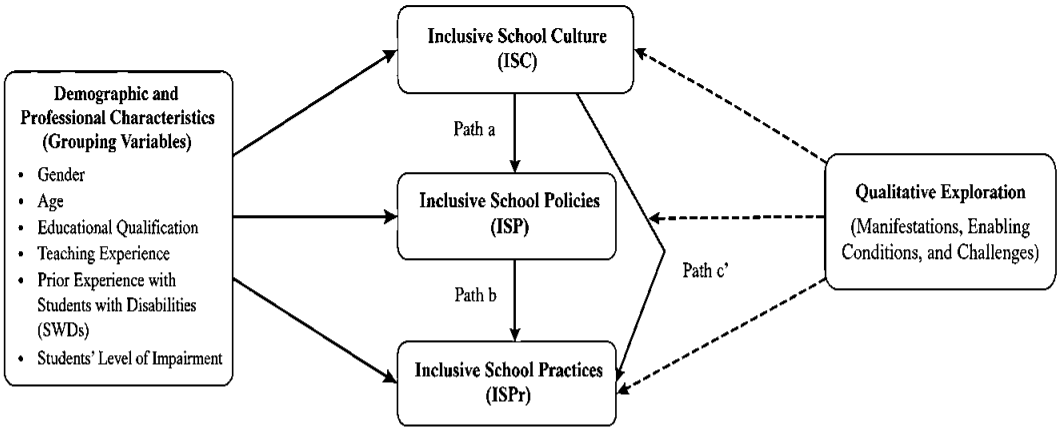

Caption:

Figure 2.1 presents the conceptual framework of the study. It posits that teachers' perceptions of inclusive school culture (ISC) influence inclusive school practices (ISPr) both directly and indirectly through inclusive school policies (ISP), which serve as a mediator. Demographic and professional characteristics (gender, age, educational qualification, teaching experience, prior experience with students with disabilities (SWDs), and students' level of impairment) are treated as grouping variables for comparative analysis. A qualitative exploration of manifestations, enabling conditions, and challenges complements the quantitative model by providing deeper explanatory insights.

Line explanations:

- **Unbroken (solid) lines** indicate hypothesized direct relationships or comparative paths. Specifically: Solid arrows from the demographic box to ISC, ISP, and ISPr represent statistical comparisons (e.g., t-tests, ANOVA) across teacher groups. Solid arrows among ISC, ISP, and ISPr (Path a, Path b, Path c') represent the proposed structural relationships, with Path c' being the direct effect from ISC to ISPr and Path a + Path b forming the indirect (mediation) effect via ISP.
- **Broken (dashed) lines** from the qualitative exploration box to ISC, ISP, and ISPr indicate that qualitative data (e.g., interviews, open-ended responses) are used to explain, contextualize, or enrich the quantitative findings for each of the three core constructs. These dashed lines do not represent statistical paths but rather an interpretive overlay.

CHAPTER THREE
METHODOLOGY

3.1. Philosophical Assumptions

Research is necessarily founded on a particular philosophical perspective known as the paradigm or the worldview (Doyle et al., 2009). According to Creswell (2009), the paradigm is a worldview that forms the understanding of the researcher about his/her surroundings, thus affecting the research question formulation, choice of suitable methodology, and data analysis. These research paradigms are critical philosophical foundations that are necessary for all researchers in search of knowledge through scientific inquiry. Paradigms form the foundation of research by guiding researchers in interpreting and analyzing the data gathered during the research process. There are various paradigms used in scientific research, including the positivist (quantitative) paradigm, interpretive (qualitative) paradigm, Critical theory, and pragmatism. Each of these paradigms is founded on different ontological (nature of reality), epistemological (the way of knowledge acquired), axiological (value base), and methodological (research design and procedure) assumptions that affect the research questions, sampling technique, data gathering procedures, and data analysis (Kivunja & Kuyini, 2017; Pretorius, 2024).

Expanding on this insight, the selection of research paradigm and methodology ought to be made judiciously such that it aligns with the unique characteristics of the study setting and goals (Melese, 2024). Importantly, researchers understand the different types of research paradigms since knowledge about paradigms will help them formulate well-grounded and pragmatic research frameworks in education (Pretorius, 2024). The selection of a research paradigm shapes a researcher's philosophy and contributes to his/her theoretical framework and study design (Shah & Al-Bargi, 2013). In this view, researchers are advised to ground their research within the chosen paradigm since it has profound implications for research practice and methodologies (Kivunja & Kuyini, 2017). Even though researchers should adhere strictly to a certain paradigm, it is imperative that they consider the demands of the study first, rather than being dogmatic with regard to philosophy (Rehman & Alharthi, 2016).

In general, researchers are greatly influenced by positivism, constructivism, critical theory, and pragmatism (Melese, 2024; Shrestha & Sharma, 2024), as briefly examined in the next section. These paradigms shape our understanding of how knowledge is constructed, our interpretation of reality, and the values and methodologies that guide our research.

a) Positivism

Positivism, which is related to the scientific method, draws its theoretical base from rationalism and empiricism (Park, Konge, & Artino, 2020). Positivist approaches focus on objectivity, empirical observation, and the testing of hypotheses (Park et al., 2020). Predominantly, it employs quantitative approaches and a substantial number of respondents to arrive at generalizable results (Park et al., 2020). According to Kivunja & Kuyini (2017), positivism considers research to be a process that entails scientific investigation through deductive processes, formulation and testing of hypotheses, operationalization, and mathematical analysis to conclude. Under such circumstances, positivist researchers remain objective and independent, using larger sample sizes to test well-formulated hypotheses (Doyle et al., 2009). In this view, reality remains objective and singular under positivism.

b) Constructivism/Interpretivism

Constructivism/interpretivism is one of the qualitative research paradigms that explores how humans make sense and interpret the social world (William, 2024). This research paradigm is distinct from positivism since, according to it, reality is viewed as subjective and socially constructed (Alharahsheh & Pius, 2020). Scholars who conduct their studies using the constructivism/interpretivism paradigm try to understand how participants interpret reality and their perception of events occurring in the surrounding social world (Creswell, 2012; Croucher & Cronn-Mills, 2018; Kivunja & Kuyini, 2017). Individuals acquire knowledge based on their personal interpretation and understanding of the surrounding social environment. People's understanding and perceptions of social phenomena vary due to differences in their perceptions of the environment (Boyland, 2019); thus, each person's experience can be seen as unique and different, while at the same time being an integral part of the collective experience of everyone. Moreover, researchers involved in studying participants' experience will most likely become an

inherent part of the study process by recognizing that there will be an influence of the researcher's subjectivity on the data interpretation (Boyland, 2019; Croucher & Cronn-Mills, 2018).

c) The Critical Paradigm

The Critical Paradigm, also known as the Transformative Paradigm, is focused on the social justice problems with an emphasis on addressing the social, political, and economic causes of oppression, conflicts, and power inequities (Mertens, 2015). As such, this research framework seeks transformation through challenging social oppression by implementing change in political arenas for the sake of social justice. This Paradigm emphasizes the importance of using both qualitative and quantitative research methods to incorporate the community's perspective and achieve valid outcomes. It highlights how power relations and privilege can influence the study's context and the reality being examined (Mertens, 2007). Social conditions and people are analyzed under the aspect of their social locations using ethnomethodology, while the knowledge is contextualized within the larger social and historical context (Kivunja & Kuyini, 2017). The paradigm critically evaluates both positivism and interpretivism approaches to research and promotes action-based research to foster justice in society (Romm, 2015).

In applying this framework, researchers pay considerable attention to matters of ethics, realities, epistemology, and methodology, with an orientation towards social justice and human rights (Mertens, 2015; Romm, 2015). In analyzing events and people in their study, they do so based on social positionality and treat research as a construction rather than a discovery of knowledge. One of the important dimensions of this type of research is to identify agencies that might otherwise remain hidden in the current social situation, with the purpose of liberating individuals. In addition, the main goal of this paradigm is to bring out the linkages between politics, ethics, and morality. Researchers adopting this perspective seek to promote human rights, social justice, and reciprocity.

d) The Pragmatic Paradigm

On the other hand, the Pragmatic Paradigm was introduced to address the weaknesses of Positivism and Interpretivism by embracing methodological pluralism in the study of social phenomena (Shah et al., 2018). While Positivism concentrates on objective reality through scientific approaches and Interpretivism centers on subjective interpretation of socially constructed realities, Pragmatism

encourages flexible approaches to the investigation of social phenomena (Kivunja & Kuyini, 2017; Shah et al., 2018). In Pragmatism, there is no absolute truth. Instead, there is the concept of "workability" in conducting research that addresses specific inquiries and yields practical knowledge. The emphasis on "workability" in Pragmatism has led to the adoption of mixed methods research approaches in the social sciences (Yvonne Feilzer, 2010; Terrell, 2012). According to supporters of Pragmatism, mixed methods research is necessary in comprehending the complexities of real-world phenomena because the application of only Positivism or Interpretivism would not yield sufficient knowledge about the complexities (Kumar, 2015). According to Creswell (2009), the challenges associated with phenomena in fields such as education require a mixed methodological approach.

There is a focus on the epistemological perspective of relations, meaning that the research relationship should differ according to the needs of any particular research project in the Pragmatist Paradigm; an ontological perspective of non-singularity concerning the notion of reality whereby various interpretations of reality may take place; and the issue of value-leadenness from an axiological perspective. Accordingly, this paradigm synthesizes both positivist and interpretive approaches by successfully resolving the issue of the “Paradigm Wars” (Gage, 1989). Herein lies the possibility of using mixed methods for accomplishing several purposes such as triangulation, compensating for methodological weaknesses, responding to research problems of different types, and formulation and testing of hypotheses (Doyle et al., 2009).

3.2. The Rationale for Using Mixed Method Designs

In the arena of disability studies and SNE, there is an overwhelming scholarly consensus in favor of using mixed-methods designs (MMDs). The rationale behind this suggestion can be traced back to the idea that disability cannot be conceived as purely biological; instead, it is a multifaceted concept influenced by various dimensions, including individual, environmental, and societal aspects. This ecological view requires researchers to have a holistic grasp of the dynamic interactions between such dimensions. Moreover, disability studies call for the use of research approaches that promote active involvement of PWDs in the process (Kumar, 2015).

In order to meet this multifaceted requirement, some researchers have recommended the employment of MMD in disability studies and SNE. MMD is useful because of its dual application, which enables it to deal efficiently with the challenges associated with this field (Love et al., 2022; Klingner & Boardman, 2011). This helps researchers explore different research problems by triangulating data from various sources. Furthermore, MMD assists in understanding more about the interaction of various factors at the individual, environmental, and social levels impacting the quality of life of PWDs (Love, Cook, & Cook, 2022). What is more, MMD may help bridge the gap between research and practice as it could provide insights into developing effective interventions (Klingner & Boardman, 2011).

The technique is very useful for researching significant topics, including issues of diversity, equity, and inclusion in schools (Roberts et al., 2024). The use of various research techniques will help to gain more knowledge about certain difficulties that exist in education in relation to the underrepresentation of diverse individuals and inequalities (Klingner & Boardman, 2011). In addition, MMD allows considering human experience from a holistic point of view because this technique rejects oppositions that usually exist in special education (Root & Lindström, 2024). Thus, for a researcher, it is vital to pay particular attention to culture and consider one's personal cultural background and assumptions (Klingner & Boardman, 2011; Root & Lindström, 2024). Even though it is complicated to incorporate different research approaches into MMD, there are many benefits to using this technique. Data received after conducting an MMD can be helpful when trying to change something in special education practice (Love et al., 2022; Root & Lindström, 2024).

Odom et al. (2005) underline two key reasons for applying multiple research methodologies in the field of SNE. First, Modern educational research emphasizes the need for various methods to effectively address various research questions, at the end enhancing educational quality for all students. Second, the complexity of the SNE field demands a multifaceted approach, driven by the variety of disability categories and educational placements for students with special needs. Since no single method can fully address the diverse questions existing in the SNE field, given the heterogeneity of participants and phenomena, it is crucial to employ multiple research strategies. Integrating both quantitative and qualitative methods can provide stronger insights than relying on

either method alone, significantly enhancing the understanding of effective practices in this crucial field (Odom et al., 2005).

3.3. Research Design

Based on the rationale outlined above, this study employed a sequential explanatory mixed research design (QUAN-qual approach), which integrates quantitative and qualitative approaches in two consecutive phases within a single study (Ivankova, Creswell, & Stick, 2006). This design begins with quantitative data collection and analysis, followed by qualitative methods purposefully designed to explain, refine, and contextualize the initial findings (Wipulanusat et al., 2020). Beyond explanation, the design enables systematic integration across phases, allowing qualitative findings to illuminate the meanings, mechanisms, and contextual conditions underlying statistically identified patterns. The integration of quantitative and qualitative strands facilitates the development of a coherent, system-level interpretation of inclusion grounded in teachers' perspectives rather than isolated descriptive accounts (Ivankova et al., 2006; Wipulanusat et al., 2020). In the final stage of analysis, findings from both phases were integrated and interpreted through established theoretical frameworks to examine the persistence of identified trends, the institutional mechanisms sustaining them, and the systemic dynamics shaping teachers' perceptions of inclusive culture, policy, and practice.

In alignment with the rationale outlined, this study employed a sequential explanatory mixed research design (i.e., QUAN-qual approach), that integrates qualitative and quantitative strands into two distinct phases (Ivankova, Creswell, & Stick, 2006). Initially, quantitative data were collected and analyzed, followed by qualitative techniques aimed at interpreting these quantitative results (Wipulanusat et al., 2020). This mixed methods approach not only provides robust explanations but also facilitates the integration of quantitative and qualitative data, uncovering underlying meanings, patterns, and contextual factors that inform statistical outcomes. By combining both strands, the research enables a comprehensive examination of phenomena (culture, policy, and practice) at the systems level, focusing on the perspectives of teachers rather than isolating individual elements (Ivankova et al., 2006; Wipulanusat et al., 2020). Finally, the results from both phases will be systematically consolidated and evaluated against relevant theoretical frameworks to assess the sustainability of identified trends and their institutional foundations.

The study design is especially appropriate for transformative research that advocates for socially disadvantaged communities such as SWDs (Creswell, 2012; Shannon Baker, 2016). However, the decision to use mixed methods was not only because of methodological compatibility, but also to create an opportunity for producing empirically grounded explanations that can be applied to formulate policies and practices in the study setting. The first part of the study involved a quantitative approach with the aid of a structured survey. It aimed to measure the views of teachers on inclusive education in terms of culture, policy, and practice. These perceptions were investigated using statistical techniques to uncover significant relationships between the three dimensions of inclusive education. The qualitative approach followed the quantitative method through the use of FGDs, KIIs, observation, and document analysis to test and verify the findings obtained from the quantitative part.

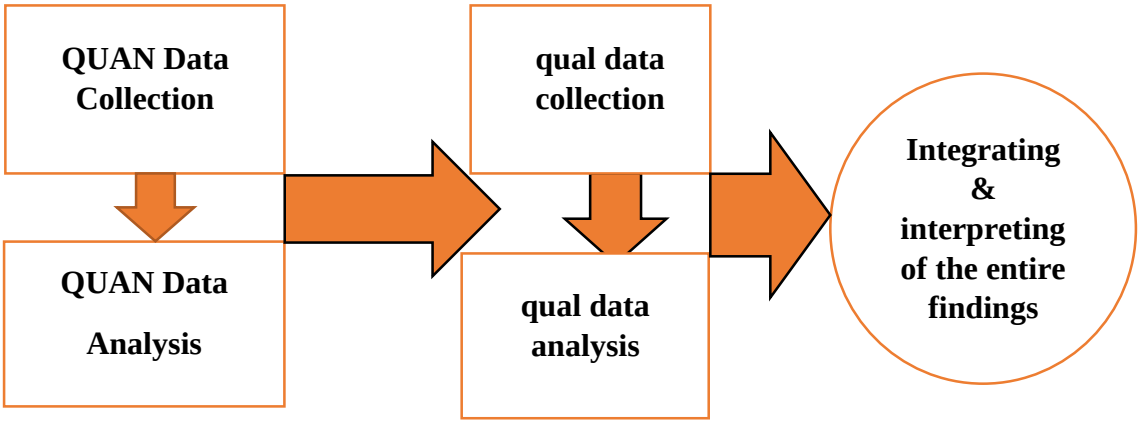

Figure 1 illustrates a visual diagram of the sequential explanatory mixed research design of the study (QUAN-qual approach).

3.4. Study Context and Site Selection

The Addis Ababa City Administration (AACA) was purposively selected as the study site. This selection was methodologically justified by several contextual and institutional considerations relevant to examining inclusive education implementation.

First, AACA is recognized as a pioneer in the establishment and operation of Inclusive Education Resource Centres (IERCs) in Ethiopia. Compared with many regional contexts, these centres are relatively well-developed and institutionally integrated into the education system. Second, administrative records from the Addis Ababa City Administration Education Bureau (AACAEB) indicate that the city has a high concentration of public primary schools enrolling SWDs, making

it an information-rich setting for investigating inclusive school culture, policy, and practice. Third, the city's administrative structure, organized into eleven sub-cities, provided an appropriate framework for implementing a multistage sampling design. Fourth, schools within AACA are comparatively accessible for research purposes, facilitating data collection across multiple sites.

More importantly, preliminary observations and professional engagement within the local education system suggested a persistent gap between the formal commitment to inclusive education and its implementation in everyday school practice. This discrepancy motivated a closer examination of how inclusive school culture, policy, and practice interact to influence the implementation of inclusive education in public primary schools.

Taken together, these considerations establish AACA as an information-rich case (Patton, 2015) for examining the policy–practice disconnect in inclusive education, while acknowledging that purposive site selection may limit statistical generalizability beyond similar urban contexts.

3.5. Target Population

Identifying the target population is an important component of research methods because it greatly affects the applicability of the research outcomes (Willie, 2024). Cohen, Manion, and Morrison (2018) also emphasize the importance of defining the target population so that the implications derived from the study can be used effectively. Since it is not always possible to obtain data from all members of the population, it is important to conduct research using samples that represent a portion of the entire population (Cohen et al., 2018; Willie, 2023). The population refers to all people who have a stake in the study, whereas the target population refers to the subpopulation that the research outcome applies to (Willie, 2023).

The target population in this study includes all public regular primary schools in AACA, which are educating SWDs with an emphasis on primary school teachers who teach the aforementioned students. The AACA has 11 sub-cities: Addis Ketema, Akaki Kaliti, Arada, Bole, Gulele, Kirkos, Kolfe Keranio, Lideta, Nefas Silk, Lafto, Yeka, and Lemikura. According to the AACA Education Bureau (AACAEB) annual report 2014 E.C (2021/2022 G.C), there are 238 public primary schools distributed across these 11 sub-cities, with 28,428 teachers working in these schools.

3.6. Sample and Sampling Technique

- **Participant Sampling for the Survey Data Collection**

In educational research, the selection of an appropriate sampling technique is critical to ensuring the validity, representativeness, and generalizability of findings. Probability sampling techniques are widely recognized for producing robust and statistically generalizable results compared to non-probability methods (Khan, 2020). Given the absence of a comprehensive sampling frame listing all primary teachers in the AACA and the logistical challenges associated with geographically dispersed populations, this study employed a multistage sampling approach to select participants (Best, Kahn, & Jha, 2017; Cohen et al., 2018). Multistage sampling involves a hierarchical selection process progressing from larger to smaller units and integrates multiple probability sampling methods, including cluster sampling, simple random sampling, systematic sampling, and stratified sampling, to efficiently draw participants from a target population (Hankin et al., 2019).

Stage 1: Selection of Sub-Cities (Cluster Sampling)

The eleven sub-cities administered under the AACA—Addis Ketema, Akaki Kality, Arada, Bole, Gulele, Kirkos, Kolfe Keranio, Lemi Kura, Lideta, Nefas Silk Lafto, and Yeka—were treated as primary sampling units (clusters). The choice to implement cluster sampling was driven by practical and statistical considerations, reflecting the complexities of sampling in large, administratively structured urban systems rather than procedural necessity alone.

Firstly, the absence of a verified, city-wide sampling frame of teachers hindered the use of simple random or stratified sampling at the individual level. Consequently, the researcher used cluster sampling as a viable alternative, effectively balancing statistical integrity with operational feasibility within a system defined by distinct administrative units (Khan, 2020). Secondly, the researcher provisionally assumed inter-cluster homogeneity regarding key teacher attributes, such as years of experience, exposure in inclusive education, interactions with SWDs, etc. This assumption stems from the standardized teachers' recruitment procedures, curriculum frameworks, and professional development programs in place across the AACA system, yet it was rigorously examined through informal consultations with AACAEB officials and limited pilot observations, yielding preliminary but inconclusive support. Thirdly, cluster sampling remains

probabilistic because clusters are selected randomly, ensuring every sub-city has a non-zero probability of selection. All 11 were included in the sampling frame, and three were drawn without replacement.

Cluster selection involved simple random sampling (lottery approach). First, each sub-city was assigned an identification number (01-11). Following this, three clusters were selected via a lottery technique without replacement, which means that once a sub-city (slip) is drawn, it is not returned to the pool and therefore cannot be selected again. In practice: the researcher wrote each of the 11 sub-cities on a separate slip of paper. The first draw (e.g., Arada) was removed from the container. The second draw then came from the remaining 10 slips (e.g., Gulele), and the third draw from the remaining 9 slips (e.g., Yeka). This method prevents the same sub-city from being chosen more than once and ensures three distinct clusters. This process resulted in Arada (03), Gulele (05), and Yeka (11). Notably, while the selected sub-cities are documented to contain a relatively higher proportion of SWDs in their enrolment compared to other sub-cities, this trait is seen as an ex post facto (after selection) characteristic rather than a sampling criterion and hence does not compromise the validity of randomness in the process. Finally, it should be mentioned that the same sub-cities have been used for both the pilot study and the main research. In order to reduce the risks of contamination effects and dependency among observations, the schools in the pilot sample have been deliberately excluded from the main sampling exercise.

Stage 2: Selection of Schools (Simple Random Sampling)

Within each selected sub-city, the sampling frame was restricted to public primary schools (Grades 1–8) that satisfied the study's operational definition—namely, enrolment of students representing at least two distinct disability categories (e.g., physical, visual, hearing, intellectual, or learning). This criterion delineated the target population ex ante (set in advance as part of the study design) rather than functioning as a post hoc or purposive filter. Lists of schools were compiled from the AACAEB 2014 E.C. annual report and cross-checked against sub-city education office records to reduce coverage error, acknowledging that administrative datasets may lag or contain inconsistencies. Eligibility varied across sub-cities: Arada (10 primary schools met the criterion out of 22), Gulele (12 primary schools met the criterion out of 24), and Yeka (13 primary schools met the criterion out of 28). From the list of eligible schools in each three sub-city, four schools

were selected using simple random sampling (lottery method) without replacement, yielding 12 schools overall. This procedure ensured that each eligible school had an equal and independent likelihood of selection, eliminating selection bias at the sampling stage and preserving probability sampling.

Stage 3: Selection of teachers

In the third stage, individual teachers were selected from the twelve primary schools included in the sample. To ensure that the estimates could be applied to the broader population of primary school teachers in Addis Ababa (N = 28,428), the necessary sample size was predetermined before choosing participants. This approach is significant as it establishes the inference scale ahead of time and reduces the possibility of making adjustments to sample adequacy afterward. Consequently, the sample size was calculated using Yamane's (1967) simplified formula for finite populations, aiming for a precision level of 0.05 under standard survey conditions:

$$n = \frac{N}{1 + N(e^2)}$$

Where n represents the sample size, N denotes the teacher population size in Addis Ababa public primary schools, and e is the level of precision. This formula was applied to calculate the sample size from the total population of 28,428 primary school teachers in Addis Ababa City, with a precision level of 0.05, which produced the following computation:

$$n = \frac{28,428}{1 + 28,428(0.05)^2} = 394.45$$

Accordingly, the minimum sample size required for this study was 394 teachers. To alleviate potential risks associated with non-response or attrition during the data collection process, the target sample size was increased by approximately 10%, resulting in a final target of 435 teachers. It is important to note that while the sampling frame for the selection process was the accessible population (N' = 1,369 teachers within the 12 schools), the parameters for the sample size were intentionally drawn from the total city-wide population to preserve the study's power for broader generalizability.

Table 3.1.

Sample of teachers within each three sub-cities and twelve Public Primary schools

Sub-cities	Primary Schools	N'(Stratum Size)	Proportionate Sample (ni)	Percent (%)
Gulele	D/ Belay Zeleke No.2	90	28	6.7
	Dil-Betigil	125	40	9.1
	Hamle 19	105	33	7.7
	Tsihay Chora	109	35	8.0
Arada	Atsie-Fasil	81	26	5.9
	Atsie Naod	60	19	4.4
	Beherawi	48	15	3.5
	Minilik II	87	28	6.4
Yeka	KokebeTsibiha	106	34	7.7
	Dejazimach Wondrad	198	63	14.5
	Kotebe Birhan Hiwot	173	55	12.6
	Karalo	187	59	13.7
	Total	1369	435	32

Note: Numbers are rounded to the nearest integer; slight adjustments were made to reach exactly 435.

Within each of the twelve selected schools, a complete list of actively teaching teachers was obtained from the school principals; this list also included each teacher's gender and educational qualification. The total number of teachers across all twelve schools formed the accessible sampling frame (N′=1,369), as summarized in Table 3.1 above. To ensure the final sample represented the target population while guaranteeing adequate representation of key demographic subgroups, a proportionate stratified random sampling technique was employed using three concurrent strata: school, gender, and educational qualification. This approach ensured that the final sample represented the target population without over- or under-sampling any school or any gender/qualification subgroup within schools. The proportional allocation for each stratum (school i, gender j, qualification k) was planned as: n_{ijk} = (Number of teachers in school i, gender j, qualification k) / N′ × 435, where 435 is the target sample size.

Within each school, after further stratifying the teacher list by gender and educational qualification, a **systematic random sampling technique** was applied within each of these subgroups. Specifically, teachers were selected from each subgroup list at every k-th teacher position (where k = subgroup teacher count / n_{ijk}), starting with a randomly chosen initial point determined by a lottery method. At the end of the data collection, 435 surveys were sent out, with

424 (94.9%) returned complete for analysis. The application of strict probability sampling throughout the multistage design ensures that the probability-based multistage sampling design supports statistical inference to teachers working in public primary schools implementing inclusive education in Addis Ababa and allow for subgroup analyses by gender and educational qualification.

Table 3.2

The Distribution of Sample Teachers by Demographic Variables

Demographic variables	Category	Frequency	Percent
Gender	Male	206	48.6
	Female	218	51.4
	Total	424	100.0
Age (years)	≤30 years	59	13.9
	31-40 years	129	30.4
	41-50 years	117	27.6
	51 or more years	119	28.1
	Total	424	100.0
Educational qualification	Diploma	198	46.7
	Degree	226	53.3
	Total	424	100.0
Total Teaching Experiences (years)	up to 5 years	60	14.2
	6-10 years	99	23.3
	11-15 years	115	27.1
	16 or more years	150	35.4
	Total	424	100.0
Teaching experiences of SWDs (years)	Never	159	37.5
	Up to 5 years	124	29.2
	6-10 years	88	20.8
	11 or more years	53	12.5
	Total	424	100.0
Teachers' Perceived Severity of Student Disabilities	Unable to assess	85	20.0
	Mild	170	40.1
	Moderate	127	30.0
	Severe/Profound	42	9.9
	Total	424	100.0

Table 3.2 provides an overview of the demographic characteristics of the surveyed teachers (n = 424). The gender distribution was nearly equal, with male 48.6% and female 51.4%. The age distribution was diverse, including 13.9% under the age of 30, 29.0% between 31 and 40, 29.7% aged 41 to 50, and 27.6% aged 51 or older. Most teachers possessed either a diploma (45.0%) or a bachelor's degree (53.3%), while a small proportion held a certificate (0.9%) or a master's degree

(0.7%). Their teaching experience varied, with 14.2% having less than 5 years, 23.8% ranges 6 - 10 years, 28.3% ranges 11 to 15 years, and 32.1% with 16 or more years. In terms of experience with SWDs, 36.3% had no exposure, while 32.5% reported up to 5 years, 17.5% between 6 and 10 years, and 13.7% with 11 or more years. Most teachers described the disabilities as mild (40.1%) or moderate (30.0%). However, 20.0% could not determine the severity, indicating a potential need for better assessment training.

- **Participants Sampling for Qualitative Data Collection**

Participants for the qualitative component of the study were selected using a purposive sampling approach. Specifically, criterion sampling (a subtype of purposive sampling) was applied to guarantee that all participants possessed characteristics and experiences relevant to understand the perspectives of teachers on inclusive education (Nyimbili & Nyimbili, 2024; Palinkas et al., 2015). Because the central focus of the study is on teachers lived experiences, beliefs, and practices regarding the inclusion of SWDs, only teachers were included in the FGDs. Rather than seeking random representation, this approach involves selecting participants or cases based on predefined criteria aligned with the aims of the study (Palinkas et al., 2015). Criterion sampling, in particular, targets participants with relevant experience and information-rich characteristics that are essential for addressing the study objectives (Nyimbili & Nyimbili, 2024). Participants other than teachers were excluded in the FGD, as their perspectives fall outside the study's scope.

To collect rich, contextualized qualitative data on teachers' perspectives concerning the inclusion of SWDs, a total of 12 FGDs were conducted, involving 96 teachers selected from the 12 sampled public primary schools. In each school, eight teachers participated in one FGD, with each teacher assigned to teach one of Grades 1–8 during the data collection period. This confirmed one teacher per grade level from each school. The rationale for this sampling strategy was threefold.

First, the grade-level structure was intended to capture developmental and curricular variation across the full primary cycle. Teachers of lower grades (1–4) and upper grades (5–8) encounter different pedagogical challenges (e.g., foundational literacy versus subject-specific instruction) and face different profiles of SWDs (e.g., early identification vs. accumulated learning gaps). Including one teacher from each grade confirmed that school-level discussions echoed the

whole spectrum of inclusive education enactment practices, rather than being dominated by a single grade band.

Second, conducting 12 separate FGDs (one per school), rather than a smaller number of cross-school groups, allowed the generation of school-specific observations. Inclusive school culture, policy implementation, and resource allocation vary considerably across schools even within the same sub-city. By holding a dedicated FGD within each school, the study collected contextual nuances (e.g., administrative support, assistive devices' availability, collegial collaboration) that would be lost if teachers from various schools were merged into a single group. This school-level focus also enabled triangulation with quantitative data and document reviews.

Third, although a total of 96 participants may appear large for qualitative data collection, the number was logistically manageable because the FGDs were not conducted simultaneously. Each FGD was scheduled separately over a four-week data collection period, with an average of three FGDs per week. Besides, the researcher recruited and trained three research assistants (graduated in special needs education) as co-facilitators. Following a half-day training on FGD moderation, note-taking, and ethical protocols, each FGD was co-facilitated by the researcher and one assistant. This allowed for effective management of group dynamics, recording, and transcription. Sequential scheduling and trained facilitation guaranteed that each 90-minute session continued focused, that each participant could contribute, and that the researcher could reflect on emerging themes between groups – a practice recommended for qualitative rigor (Krueger & Casey, 2015).

To ensure that all FGD participants had relevant contextual knowledge and experience, eligibility criteria required teachers to have at least three years of service in their current school and a minimum of five years of experience teaching SWDs. These criteria ensured that participants could speak meaningfully about school-level inclusion practices and had adequate exposure to students with various disabilities. Teachers who served as IERC coordinators or held administrative roles were excluded from FGDs to avoid power imbalances; they were interviewed separately (see KII section next). To protect anonymity and confidentiality, participants and schools were assigned unique identifiers (e.g., School A…School L) in all reporting.

For the (KIIs, **a purposive sampling technique** was applied by including all 12 IERC coordinators/SNE focal persons (5 male and 7 female) from the sampled public primary schools, given their specialized coordination roles and direct responsibility for organizing inclusive education support for students with disabilities (SWDs). In addition, the same 12 sampled schools served as the units of analysis for structured school-environment observations and document review, ensuring site consistency across the quantitative and qualitative strands and supporting systematic triangulation of evidence.

3.7. Data Collection Instruments

3.7.1. Conceptualization of Study Constructs

Inclusion of SWDs in primary schools in this study is not considered as a simple policy and/or practice but is considered as an institutional process. As suggested by the Index for Inclusion, which defines the meaning of school inclusion in terms of three interrelated aspects of ISC, ISP, and ISPr, inclusion can be understood in relation to how the interaction of values, organization, and teaching is either harmonious or contradictory concerning inclusion in schools. Though the Index for Inclusion was designed as a reflection tool rather than a psychological test, its threefold approach offers us significant insights into the process of inclusion in schools, considering the gap that is seen between policy and practice in primary schooling in Ethiopia.

The ISC looks at the normative and relational context that creates the notions of belonging, recognition, and expectations for SWDs. Culture should not be viewed as an abstraction; rather, it must be understood as an action that helps determine who is considered a true participant of the school community. The ISC involves two components – BC and EIV. BC refers to relational inclusion, meaning the study of whether SWDs are socially included in the peer group, leadership, and parent-school interactions, and whether collective endeavors help affirm their participation not just physically but also academically, emotionally, and socially. On the other hand, EIV helps examine whether notions such as dignity, equality, and the absence of discrimination become part of day-to-day practices and shared commitments.

ISP explores the formal and procedural framework that influences inclusive education. It views policy as an enacted structure rather than just a written intention. Two sub-dimensions are

identified: PAI and OS. PAI assesses how well school actors understand, communicate, and apply inclusive education frameworks, focusing on leadership coordination, clarity in admissions and accessibility procedures, and the incorporation of policy directives into operational documents. OS investigates the institutional mechanisms facilitating inclusion, such as inclusive education committees, IEP, professional development provisions, and resource distribution systems. This distinction helps differentiate between policy as written documents and policy as an active institutional process, mainly where compliance may occur without effective operational capability.

ISPr identifies the intersection of culture and policy in daily educational practices. It views practice not just as teaching methods but as a manifestation of inclusion within school and classroom routines and material contexts. The two key aspects are: TL and RP. TL reflects pedagogical adaptability, covering strategies like differentiated instruction, lesson modification, flexible grouping, co-teaching, and inclusive assessments aimed at enhancing participation and progression for SWDs. RP focuses on the availability and effective use of material, technological, and infrastructural resources essential for inclusive teaching. By breaking down practice into pedagogical efforts and resource accessibility, the framework emphasizes that mere instructional dedication is inadequate without necessary structural support. Together, the six sub-dimensions (BC, EIV, PAI, OS, TL, and RP) illustrate inclusion as a complex institutional aspect, guiding item development and measurement validation.

3.7.2. Survey Instrument Development

The present study employed the *Index for Inclusion* (Booth & Ainscow, 2000, 2002, 2011) as the conceptual foundation for developing the teacher survey questionnaire. The Index is internationally recognized as a comprehensive framework that guides schools in promoting inclusive education by critically examining school culture, policies, and practices in relation to the participation and learning of all students. While the Index adopts a broad conception of inclusion encompassing diverse forms of marginalization, the present study operationalized its framework specifically in relation to the education of SWDs in primary schools of Addis Ababa, Ethiopia. Its three overarching dimensions—Inclusive Culture, Inclusive Policy, and Inclusive Practice—are each subdivided into domains supported by indicators and guiding questions (Booth & Ainscow, 2002, 2011). However, despite its conceptual robustness, the Index was not designed as a

psychometric instrument; rather, it functions as a reflective and dialogic resource for school self-evaluation (McMaster, 2013). The central methodological challenge in this study was therefore not adoption but transformation: converting a reflective framework into a structured, empirically testable survey instrument suited to the Ethiopian primary school context.

This transformation was necessary because no standardized teacher survey existed in Ethiopia to assess perceptions of the inclusion of SWDs in mainstream schools. Moreover, the Ethiopian context presents specific structural and cultural conditions—including policy–practice gaps, limited material resources, uneven professional training, and persistent stigma—that required contextual adaptation rather than mechanical replication of international models. The development process therefore followed a staged logic: (1) conceptual grounding in the Index framework, (2) systematic item generation and contextual adaptation, (3) expert-based content validation using the Content Validity Index (CVI), (4) translation and back-translation procedures, and (5) pilot testing to evaluate clarity and reliability.

a) Conceptual Grounding and Item Generation

The development of items was based on the three interrelated areas of the Index: ISC, ISP, and ISPr (Booth & Ainscow, 2000, 2002, 2011). This adaptation ensured alignment with globally recognized inclusive education frameworks while upholding a logical linking between values (culture), institutional structures (policy), and practice. Also, since the Index is non-prescriptive and reflective, its indicators needed to be reformulated into quantifiable statements. Consequently, reflective prompts were redesigned as closed-ended questions on a five-point Likert scale (1 = strongly disagree to 5 = strongly agree) to systematically measure and gather teachers' perceptions.

An initial pool of 67 items was drafted across the three domains: ISC (21 items), ISP (23 items), and ISPr (23 items). Each domain was subdivided into two components to preserve analytical differentiation: ISC into BC (11 items) and EIV (10 items); ISP into PAI (13 items) and OS (10 items); and ISPr into TL (15 items) and RP (7 items). Culture items examined belonging, recognition, and shared values; policy items assessed awareness, enactment, and structural supports; and practice items focused on pedagogical strategies and resource provision. A systematic review of international operationalization of the Index (Amka et al., 2023; Carvalho et al., 2022; Moliner et al., 2011; Sánchez et al., 2019) informed refinement, signifying that while

the Index's architecture is transferable, item wording requires contextual recalibration. So, items were critically adapted to reflect Addis Ababa's primary school realities, including infrastructural constraints and the central role of teachers in mediating home–school relationships.

b) Expert Review and Content Validation

To establish content validity, the CVI procedure was implemented in accordance with established scale-development guidelines (Lynn, 1986; Waltz, Strickland, & Lenz, 2005; Polit & Beck, 2006). Consistent with Lynn's (1986) two-stage framework, the process involved: (a) the construction of items aligned with the theoretical domains of inclusive culture, policy, and practice, and (b) systematic expert judgment and quantification of item adequacy. This sequencing ensured that content validation was not treated as a post hoc endorsement, but as an integral component of instrument refinement. A panel of nine subject-matter experts was convened to evaluate the instrument. The panel comprised doctoral candidates and senior academics in SNIE, measurement and evaluation, curriculum and instruction, and social psychology at Addis Ababa University (AAU) and the University of Gondar (UoG). The multidisciplinary composition of the panel was intentional, enabling both construct-level scrutiny and measurement-level evaluation. Experts were briefed on the study objectives and the operational definitions of each construct before rating.

Each item was evaluated independently for relevance and clarity using a four-point ordinal scale. For relevance, 1 = not relevant, 2 = somewhat relevant, 3 = quite relevant, and 4 = highly relevant. For clarity, 1 = not clear, 2 = requires major revision, 3 = requires minor revision, and 4 = clear. Following Lynn (1986), relevance ratings of 3 or 4 were recoded as 1 (content valid), and ratings of 1 or 2 were recoded as 0 (not content valid). Item-level Content Validity Index (I-CVI) values were calculated as the proportion of experts rating each item as content valid. The Scale-level Content Validity Index (S-CVI/Ave) was computed as the average of the I-CVI values across items (Polit & Beck, 2006). For a panel of nine experts, Lynn (1986) recommends a minimum acceptable I-CVI of 0.78.

Table 3.3.

Summary of Teachers' Survey Questionnaire Content Validity Index

No.	Scale Dimension	Draft items	I-CVI (Min – Max)	Items rated content valid	S-CVI /Ave
1.	ISC (Culture)				

1.1.	BC	11	0.89 - 1.0	10	0.91
1.2.	EIV	10	0.89 - 1.0	10	1
2.	ISP (Policy)				
2.1.	PAI	11	0.78 - 1.0	9	0.85
2.2.	OS	11	0.89 - 1.0	10	0.91
3.	ISPr (Practice)				
3.1.	TL	15	0.89 - 1.0	14	0.93
3.2.	RP	8	0.89 - 1.0	7	0.88
	Total	67	0.78 - 1.0	60	0.91

Based on Table 3.3 shown above, I-CVIs varied between 0.78 and 1.00, and all S-CVIs/Aves met the standard of 0.80 and above (Lynn, 1986; Polit & Beck, 2006). All questions meeting the minimum requirements went through qualitative analysis in conjunction with expert comments. Following the analyses based on both quantifiable data and comments, 7 items that seemed redundant or inadequately represented were eliminated. For instance, "I enforce active parental involvement in planning and decision making for SWDs' support" is one of the items that were eliminated because it indicated teachers' perception of their role as administrators. Furthermore, there were 12 items whose wording needed to be revised in order to make the items clearly aligned to the concept. Thus, the content validation process was much more than just numbers. It acted as boundary clarification from a theoretical point of view.

c) Translation and Back-Translation

Following content validation, the refined instrument was translated into Amharic. The researcher conducted the initial translation, which was reviewed by two language experts. A back-translation was performed by a SNE educator with expertise in English language teaching. Semantic equivalence was confirmed through comparison of the original and back-translated versions. For instance, the item "I know the school has a designated inclusion team to monitor and implement inclusive initiatives" was back-translated as "I believe the school has a designated inclusion team to monitor and implement inclusive initiatives." Because conceptual intent was preserved, the item was retained. This process ensured linguistic and conceptual equivalence before the pilot administration.

d) Pilot Testing

Following expert validation and translation procedures, a pilot study was conducted to examine how the instrument functioned under field conditions before full-scale data collection. The pilot

was implemented in four public primary schools located in Gulele and Yeka sub-cities, with two schools selected from each sub-city. These schools were deliberately excluded from the main sample to prevent contamination of the final results. In collaboration with school principals, 154 teachers (78 male and 76 female) were randomly selected using the lottery method to ensure unbiased participation. The pilot was therefore designed not merely as a technical rehearsal, but as an empirical stress test of the instrument's clarity, contextual fit, and internal structure within the Addis Ababa primary school context.

Consistent with methodological guidance on instrument development (Creswell, 2015; Lodico, Spaulding, and Voegtle, 2006; Mertens, 2015), the pilot pursued three sequential objectives. First, alignment with the study's research questions was examined. Teachers were asked to indicate whether items meaningfully reflected their experiences of inclusive education for SWDs. Items that did not map directly onto the operational definitions of inclusive school culture, policy, or practice—such as those addressing school location, general facility satisfaction unrelated to accessibility, or broad academic performance trends not specifically linked to inclusion—were deemed to fall outside the defined construct boundaries and were therefore removed to maintain construct purity and measurement integrity. Redundancy was also detected; for example, one item addressing the organization of support overlapped substantively with an item under resource provision practices. To avoid construct duplication and inflation of internal consistency, the redundant item was eliminated.

Second, the pilot study evaluated language clarity and usability of responses. Feedback on language, length, and comprehension from teachers was both structured and unstructured. The concepts of "School for All" and "diversity," used in policy-related questions, were found to be over-inclusive compared to the operational definition of the study. Language changes were introduced in order to increase the precision of constructs; therefore, "School for All" was changed to reflect PAI, while "diversity" was changed to "inclusion of SWDs" in order to refine the semantic scope in accordance with the operational definition of study participants. Three questions related to practices were too lengthy and complex; these were reworded to be clear but still behaviorally specific (i.e., differentiated instruction).

Thirdly, internal consistency reliability analysis was conducted using Cronbach's alpha, following the minimum acceptable cut-off point of 0.70 by Viswanathan (2005). All three major constructs, along with their 6 sub-constructs, attained this criterion, indicating internal consistency in the pilot phase. No items were dropped purely due to reliability results. However, keeping in mind statistical as well as qualitative analysis of the pilot data, one additional item was dropped for theoretical reasons, taking the total number of items from 60 to 59. In all, the pilot study provided the process of systematic refinement rather than being just a procedural ritual. It helped in defining the constructs, improving the language used, and validating the instrument before conducting the main data collection exercise.

3.7.3. Qualitative Data Collection Instruments

The qualitative phase of this study utilized various complementary tools to develop context-rich and triangulated insights into the realities and difficulties of inclusive educational culture, policies, and practices for SWDs. Aligned with the explanatory mixed-methods design, these qualitative tools aimed to enhance, contextualize, and critically examine patterns observed in the quantitative phase. The study employed four instruments: a semi-structured FGD guide, a KII guide, a structured non-participant observation checklist, and a document review protocol. Collectively, these instruments aimed to gather experiential data, institutional frameworks, material conditions, and documentary evidence of inclusion, facilitating analytical triangulation across perceptions, practices, and formal policies in primary schools.

A. Focus Group Discussion (FGD) Guide

FGDs were carried out at each school involved, grouping eight teachers together to gather a range of opinions on inclusive education for SWDs. FGDs are recognized for their ability to produce rich, interactive data through collaborative dialogue and have proven effective in both educational and social science research as a supplement to quantitative methods (Krueger & Casey, 2015; Ab Aziz, 2015; Gundumogula & Gundumogula, 2020). This study utilized explanatory FGDs, which allow participants to validate and elaborate on previous quantitative findings, offering contextual insights (Morgan, 1997; Nyumba et al., 2018). This approach was particularly valuable in exploring teachers' views on the inclusivity of school culture, policy, and practices in Ethiopia,

where cultural factors may influence inclusion more than policy enforcement (Miles & Singal, 2010; Getahun, 2021).

The qualitative phase was strategically conducted after the quantitative analyses to enhance explanatory richness within a mixed-methods approach (Creswell & Plano Clark, 2018; Teddlie & Tashakkori, 2009). In the quantitative segment, one-sample t-tests were utilized to determine if teachers' perceptions of specific survey items related to the three dimensions of inclusiveness significantly deviated from a neutral point. Additionally, SEM was used to explore the interrelations among these dimensions: culture, policy, and practice. The subsequent FGDs allowed educators to interpret and contextualize their findings, articulating why certain items were viewed as more or less inclusive based on their experiences in schools. While the guide facilitated focused discussions on these key dimensions, it also permitted participants to address contextual challenges, such as limited resources, inadequate training, and prevailing social norms (Pijl & Frissen, 2009; Mertler & Reinhart, 2017).

The FGD guide was designed in line with the study's conceptual framework and definitions, which define inclusive education as a continual process of transforming school cultures, policies, and practices to enhance the involvement and success of all students, especially those with disabilities. It was structured around three analytical areas: ISC (BC & EIV), ISP (PAI & OS), and ISPr (TL & RP). The questions aimed to gather specific accounts and examples, highlighting both inclusive and exclusionary experiences during a typical school day. The guide's semi-structured format allowed for deeper inquiry, promoting comparability and thematic richness across different groups.

The guide commenced with introductory questions aimed at gauging participants' understanding of inclusion while prompting them to share their experiences. Following this, it delved into topics like belonging and participation, examining values, expectations, and discrimination, along with awareness of pertinent policies and procedures (like admission, assessment, accessibility, etc). It also addressed support organization (like coordination, IEP, etc), classroom strategies (including lesson modifications, assessment adjustments, etc), and resource conditions (e.g., accessible materials and assistive tools). Finally, the guide wrapped up with reflective queries that encouraged participants to pinpoint effective practices and priority changes to shift from mere presence to active participation and learning. To ensure that language, neutrality, and the context of Addis

Ababa's public primary schools were considered in the discussion process, the discussion guide was revised to suit the study's target population. The questions were designed to avoid leading language, ensuring that participants provide a range of responses regarding both the enabling and disabling factors under discussion. Ethically, a standardized introduction of the discussion guide was ensured, as appended in Appendix D.

B. Key Informant Interview (KII) Guide

The face-to-face semi-KIIs were held with the IERC coordinator and SNE focal person for deeper insight into the process of implementing inclusive education in the schools. In their guides, the interviews contained open-ended questions, as explained by Cohen et al. (2007). The process involved prompts that were used to explore further the subjects mentioned during the interviews. In addition, the probes facilitated more in-depth inquiries about the issues under investigation. The use of KII served to explain specific quantitative results from the study. It worked well in addition to surveys and FGDs through collecting information from individuals whose roles were crucial in school administration, classroom teaching, and resource allocation. Both the IERC coordinators and SNE focal persons were important sources of information not only on formal systems (planning and referrals, for example) but also on practical matters such as resource allocation. The questions asked in interviews were informed by quantitative data needing clarification.

The guide was tailored to fit the study's major constructs, making it relevant for investigating inclusion issues. It comprised background respondents' information, and (ii) a semi-structured protocol broken down into thematic blocks. The blocks addressed the local definition of inclusion, school culture, policy enforcement, support mechanism, pedagogical strategies, and monitoring suggestions. Each major question was followed by probing questions to solicit specific examples without restricting discussion on emergent themes. If the interviewees agreed, the conversations were audiotaped and later transcribed. However, notes were taken if they declined taping. Voluntary participation was allowed, and anonymity ensured. The data generated from KII were descriptive accounts of implementation processes that were compared against findings from survey and FGD tools. This triangulation added validity to the study because it involved contrasting teachers' opinions against the accountants' perceptions of the impact of culture, policy, and practice on the inclusion of SWD in the study area.

C. Observation Checklist

Observation is an important method that helps obtain information firsthand within a natural setting (Cohen et al., 2007). In this case, the study was carried out using systematic and non-participant observation techniques. The use of a checklist (see Appendix C) facilitated the collection of information about the resource centers and physical environment affecting the inclusion of SWDs in the study area. The checklist considered the presence, sufficiency, availability, usefulness, and utilization of resources concerning inclusive education, with particular emphasis on the availability of IERCs and accessibility to the school environment. The checklist catered for students with visual and hearing impairment, physical disability, ASD, and intellectual disability. The checklist was used to measure not only the availability but also the functional capacity, availability, and applicability of the resources and adaptive devices in the process of learning.

The collection of data was based on structured non-participant observation using established parameters. The researcher communicated to the school principal and the IERC coordinator the reason for the observation without affecting the school routines. The observations were done by the researcher and his assistants in different schools' sites, including the entrance gate, paths, water sources, toilet areas, playgrounds where they exist, basic facilities (like library &laboratory), and IERC. The ratings were based on the researcher's direct observations, although there were a few confirmations from the responsible parties when direct evidence was impossible, such as testing the functionality of the device or its parts. Any source of evidence was written down in the remarks. The checklist had eight parts, which dealt with issues of accessibility of the environment and resources for SWDs. Part A looked at the physical accessibility of school facilities. Part B addressed the issue of the accessibility of resource center services. Parts C-G were inventories of disability-related resources for students with various impairment and Not Applicable (N/A) could be used when it did not apply to the student.

In order to facilitate comparability and to maintain a realistic level of accuracy, three response types were used for the checklist (see Annex C). The response used for sections A–B ranged from 1=Not accessible (barriers exist), 2 = Partially accessible (access exists, but there are barriers) to 3 = Accessible (generally accessible and safe to use). Sections C–G involved the use of Available / Not Available, with “Available” meaning materials that can be accessed, while “Not Available " means materials that are unavailable, inaccessible, not functional, or non-existent. Finally, section

H involves Yes/No responses as a result of observation. Remarks were also required to be made about the facts of condition, number, accessibility, availability, usage, and any barrier/enablers identified. Observations made at the field sites, which included information about the availability and accessibility of materials and actual usage, along with the surveys and interviews, provided triangulated evidence of the conditions and barriers identified through the survey.

D. Document Review Protocol

To gain a deeper understanding of how disability inclusion is translated into school-level governance and practice, a targeted document review was conducted as part of the qualitative strand. Consistent with an inductive orientation to document analysis, attention was given to the original context, language, and intended meaning of documents while examining how inclusion-related commitments are expressed and operationalized in routine school documentation (Bogdan & Biklen, 2007). In the process of choosing sources, more emphasis was placed on documents that made mention of terms that are commonly used in relation to the Ethiopian educational sector (e.g., CWDs, SWDs, SNE, IE, education quality, quality education for all, equity, equal access).

The targeted review of relevant documents was undertaken to examine how disability inclusion is practiced in schools. Through qualitative analysis with an inductive approach, the process included reviewing documents for how the principles of inclusion are addressed in regular school documentation using key terminologies related to the Ethiopian context, like CWDs, SWDs, SNIE, education quality, equity, and equal access. This process provided the review with contextual relevance since it was based on the use of relevant policy languages. Its main objective was to gather institutional evidence to be compared with survey data, FGDs, KII, and observations, which enabled a systematic evaluation of whether the commitments to inclusion were practiced in schools. Specifically, this involved evaluating how inclusive concepts are articulated in schools through policies or practices, mainly from school policy artifacts in relation to national policies.

Table 3.4.

Sources and Scope of Documents Reviewed and Their Analytical Purpose

Level	Examples of documents reviewed	Analytical purpose
School-Level	School vision/mission and core value statements; annual school plans/school improvement plans; school rules,	To examine the translation of national inclusive education commitments into school-level

(Primary Focus)	regulations, and codes of conduct; terms of reference/records of SNIE committees/focal persons; anonymized IEP templates or samples; teacher training records on inclusion; resource center inventories/logs; formal parent–school communication records related to SWD support reports.	frameworks, procedures, coordination mechanisms, and operational records.
System-Level (Contextual Reference)	Ethiopia's SNIE Strategy; relevant MoE/AACAEB inspection frameworks/guidelines/directives (where available).	To establish policy benchmarks and expected standards against which school-level institutionalization and enactment were interpreted.

To guide inclusion decisions and maintain methodological discipline, documents were selected based on their relevance to inclusion and SWDs, evidence of current use during the study period, accessibility, and ethical appropriateness. Importantly, the absence of key documents, such as missing committee records, unavailable IEP templates, or a lack of resource inventories, was recorded as analytically meaningful evidence of weak institutionalization and limited proceduralization of inclusive education at school level, rather than treated as a simple logistical limitation. As regards extraction and analysis, the documents were analyzed following a structured method that reflected the conceptual framework of the study (Appendix D). The analysis proceeded according to the three main themes (ISC, ISP, & ISPr), and in relation to each theme, the document was analyzed as follows: (a) existence of commitment to inclusion; (b) clarity of those commitments; and (c) operationalization thereof. Operational specificity captured whether statements of intent were translated into implementable provisions, such as clear procedures, assigned responsibilities, resource allocation, and monitoring arrangements. Where appropriate, verbatim excerpts were captured to provide evidentiary support and to preserve the institutional language through which inclusion was framed.

To ensure analytic alignment with the study constructs, the ISC domain focused on references to inclusion, equity, diversity, and SWDs; rights-based framing of SWDs as rights-holders; and commitments to collaboration, belonging, and non-discrimination. In parallel, the ISP domain examined alignment with national policy/SNIE; documented procedures for SWD admission, assessment, and accommodation; coordination mechanisms (e.g., committees or focal persons and IEP guidance); and evidence of inclusion-oriented planning and/or resource allocation. Finally, the ISPr domain attended to evidence of planned instructional adaptation (e.g., differentiation or UDL-

oriented planning), teacher capacity-building activities, assistive resource provision, and monitoring or follow-up mechanisms intended to support SWDs.

Finally, in relation to triangulation and interpretation, document review findings were used to verify, contextualize, or challenge participants' claims about policy awareness, implementation arrangements, and available support systems, and to triangulate evidence across the survey, FGDs, and classroom/school observations. Document evidence also informed the interpretation of SEM results by operationalizing the "policy" construct in terms of tangible institutional mechanisms, such as procedures, assigned roles, resourcing, and monitoring provisions, or by documenting their absence. In this way, the review strengthened analysis of policy–practice alignment and helped identify concrete implementation gaps. Accordingly, document evidence was integrated into the Results and Discussion rather than presented as a stand-alone findings strand.

E. Qualitative Instruments Piloting and Trustworthiness Procedures

In parallel with the quantitative tool pilot, the qualitative tools were also piloted in public primary schools. This process involved consideration not only of the clarity and logic of the guides, but also of whether the questions asked could provoke the participants to talk based on their actual experiences rather than just repeating institutional knowledge. If any of the questions seemed ambiguous or shallow, they were clarified and/or altered concerning wording, probing techniques, observation criteria, or document review themes. The validity of the qualitative results obtained was confirmed by applying the criteria of credibility, transferability, dependability, and confirmability as suggested by Lincoln and Guba (1985), and modified by Shenton (2004).

Credibility was achieved through extended time periods, triangulation, member checking, peer debriefing, and negative case analysis. The researcher took at least two days before actual data gathering to spend time in sampled schools to learn the context and understand the dynamics of the process. Triangulation involved comparing findings from the FGDs, KIIs, observation data, and documents in the schools with practices described by participants. Member checking involved the presentation of findings to participants after interviews and FGDs, and some of the transcripts were checked by volunteers. Peer debriefing of two doctoral colleagues with expertise in inclusive education enabled critical reflection on assumptions made during analysis. Negative cases were also included in the findings for more comprehensive results. Transferability was accomplished

through thick description of the research context, which included the school environment, sub-city context, teachers, and how the inclusion of SWDs was done. Findings from similar low- and middle-income contexts were also considered in interpreting findings.

To ensure dependability, a thorough audit trail was carried out, capturing all transcripts, field notes, coding sheets, analytic memos, and procedural decisions made throughout the course of the study. To increase coding reliability, another coder independently coded about 20% of the transcripts according to the same code framework. With an 87% agreement between coders, the process of coding showed consistent procedural accuracy, with any discrepancies used in refining the coding process. Another measure used to establish dependability included the use of a reflexive journal for documenting interpretations and procedural decisions made during the study, along with any researcher assumptions. For confirmability, the use of an audit trail, triangulation, reflexive journals, and negative case analysis was utilized. All of the procedures used were meant to ensure the researcher's interpretations would be based on participant experiences, observations, and documentary evidence, not based on the researcher's assumptions. Diverging experiences were kept and analyzed as a part of the interpretation process. Together, these measures added to the validity of the research study (Lincoln & Guba, 1985; Shenton, 2004).

3.8. Data Collection Procedures

The process of data gathering for the current MMD was conducted sequentially in two phases, namely the quantitative and the qualitative, after the development of instruments and the necessary ethical and logistic preparation. Permission to collect data was obtained from the AACAEB, the relevant sub-city education offices, and each sampled public primary school. School principals were briefed on the study's purpose to facilitate access to teachers, other school-level respondents, and relevant records. Before participation, all respondents were informed about the purpose of the study, the voluntary nature of participation, their right to withdraw at any point without consequence, and the measures taken to ensure confidentiality and anonymity, including the use of anonymized school identifiers (e.g., School A). Verbal informed consent was obtained after the study purpose, and the limits of confidentiality and anonymity were explored.

With permissions secured, the quantitative phase began with the administration of the final teacher questionnaire through trained data collectors assigned from the respective sub-cities. To improve fieldwork management and follow necessary ethical procedures, the researcher chose three SNE officers from the sampled sub-cities to assist and facilitate the survey administration. These individuals were oriented on the study objectives, the questionnaire, and ethical considerations by the researcher. Additionally, the researcher gave training to the data collectors regarding questionnaire administration, which includes how to interact with respondents prior to, during, and after administration of the questionnaire. The training comprised of the sampling approach, the structure of study tools, and how to engage respondents so as to avoid any kind of confusion. Tools were handed personally after the standard briefing that included information found in the cover letter. This information includes the anonymous, confidential, and voluntary nature of the tools. On-site spot checks were conducted by the researcher to improve quality control during the administration of data gathering tools.

After collecting survey data, qualitative data were collected to further understand the patterns found during the surveys and collect contextual and implementation-level evidence. FGDs were carried out with the teachers in a conducive environment set up by the researcher in collaboration with data collectors. Before the start of each discussion, participants were told the reason for holding the discussion, how their privacy would be maintained during the discussion, and that no names would be used when analyzing their responses. The FGD was then audio-recorded after participants agreed; however, if it could not be audio-recorded, the researcher kept detailed notes of what happened during the discussion. KIIs were carried out with 12 primary schools' IERC coordinators. These interviews were conducted in a quiet and conducive environment set up by the researcher inside each school, and participants were told the reason for the interview that they could withdraw at any time and how their responses would remain confidential.

In addition to self-reports, observations were made in each selected school to evaluate the availability of the physical environment and resources related to inclusion in education. The heads of schools and the IERCs were briefed about the objectives of the observations and that these would be non-invasive and carried out without causing any disturbance. Observations were made using a checklist, and any clarification was sought if required, without disrupting routine activities. All observations were noted objectively and systematically without any bias. Lastly, to understand

inclusive education for SWDs at each of the twelve schools, document analysis was conducted by the researcher. Document analysis involved examining pertinent school plans, policy issues, and documents using an objective protocol. Permission to conduct the analysis was obtained from the school principals, and all ethically pertinent documents were analyzed.

3.9. Data Screening and Preliminary Assessment of SEM Assumptions

Data screening is the process of evaluating data quality and its suitability for conducting a parametric test before performing the analysis itself. The process of data screening relates to the issues of data cleaning, assumptions, and possible problems. In preparation for the conducting of CFA and SEM analysis, the data collected in the course of the survey, consisting of 59 (originally 60) items identified as relevant after the content validation procedure were thoroughly screened in order to assure quality data and compliance with statistical assumptions. The significance of this step is determined by the necessity of validating the relevance of the dataset for statistical analysis due to distortion of parameter estimation resulting from assumption violation, such as normality and multicollinearity (Byrne, 2016; Hair et al., 2010). The survey was conducted on a sample of 435 teachers (214 males and 221 females), who were randomly selected from the list of teachers working in the selected schools.

Missing Values: The first step in the process required is checking for missing values, disengagement, and outliers. Frequency distributions were used to ensure that all data fell within the bounds of the five-point Likert scale from 1 (strongly disagree) to 5 (strongly agree) to avoid any invalid values (refer to Appendix for descriptive statistics). A total of 11 instances had some missing data (2 cases in ISC, 3 in ISP, and 4 in ISPr), with a missing data proportion ranging within 15% - 25%. As Hair et al. (2010), the case removal procedure involved listwise deletion of instances having more than 10% missing values, as it confirms the integrity of data for CFA/SEM, provided there was little missingness. Besides, two cases with missing values of less than 1% were imputed using mean substitution.

Detection of outliers: Univariate and multivariate outliers were considered for this analysis to preserve data quality. The univariate outliers were detected based on z scores, with anything beyond 3.0 as outlier candidates (Hair et al., 2010). There were no univariate outliers in the 54

items used. The multivariate outliers were detected based on the Mahalanobis distance with a $p < 0.001$ significance level (Byrne, 2016). Two outliers were detected based on multivariate distance and were eliminated. Cook's distance was also conducted with no outliers identified since none of the distances were higher than 1.0 (Hair et al., 2010). But, after doing all these processes, there were 11 exclusions; that is, 9 observations that were excluded owing to missing data (six men and five women had between 15% to 25% of missing information), while 2 were excluded because of being multivariate outliers based on the Mahalanobis distance technique (Byrne, 2016). Therefore, the resulting sample was 424 (208 males & 216 females) from the initial 435 (214 males & 221 females), confirming quality data for CFA/SEM constructs' assessment (Booth & Ainscow, 2011).

Unengaged Responses: The standard deviation for the responses by the survey participants was used to detect disengagement. As Hair et al. (2010), the absence of engagement is indicated if the standard deviation is less than 0.25 because there is minimal variance. The standard deviations in this research ranged from 0.64 to 1.35, implying that all the teacher were highly engaged.

Multicollinearity Analysis: An assessment was performed to determine whether the 54 indicators retained sufficient discriminant validity for CFA/SEM. The analyst assessed the relationship between inter-factor correlations, VIF, tolerance, and R^2. According to Hair et al. (2010), inter-factor correlations should not surpass 0.85, VIF should be less than 10, tolerance should be greater than 0.1, and R^2 should be under 0.90. The findings showed that the inter-factor correlation was between 0.43 & 0.75, VIF ranged from 2.14 to 7.41, and R^2 was between 0.39 & 0.79, indicating no multicollinearity and validating the indicators' discriminant validity in ISC, ISP, and ISPr.

Normality test: Multivariate normality is critical to CFA and SEM, since violation of this assumption may affect estimates and fit indices (Byrne, 2016). In turn, univariate normality was tested in all 54 indicators based on skewness and kurtosis measures. The assessment of skewness within the limits of -2 to +2, alongside kurtosis values of -7 to +7, reveals an approximation of normal distribution for Likert items (Hair et al., 2010). Out of 54 indicators, 51 items met this criterion, with skewness ranging from -1.10 to 0.84, and kurtosis varying between -1.07 and 0.92 (see statistics in Appendix). Three items (item 7 - BC in ISC, item 16 – PAI in ISP, item 52 – TL in ISPr) demonstrated values outside these boundaries.

Linearity test: Besides assuming normally distributed data, another crucial requirement of SEM is the assumption that the link between measured indicators and the underlying factors is modeled using linear functions (Byrne, 2016; Kline, 2016). For verifying the same, bivariate scatter plots of composite variables and their respective factor scores have been plotted. The observed trend in the plots did not show any form of curvature or non-linearities; instead, there was evidence of roughly linear relations across all values (see statistics in the appendix). Further, residuals did not indicate any non-linearity problems (Hair et al., 2010).

The maximum likelihood (ML) estimation method can usually withstand minor departures from normality, particularly in a large sample size (such as n = 424). Thus, the identified variations will not make much difference to this study's analysis and estimations. Robust ML estimation and weighted least squares can be applied to safeguard against any potential problems when necessary. Based on the above findings, it seems that there are no influential outliers, multicollinearity at an acceptable level, normality, and linearity present in this data set. This implies, data set meets all the necessary assumptions for a proper CFA and SEM analysis.

3.10. Factor Structure and Measurement Validation

3.10.1. Exploratory Factor Analysis (EFA)

The measurement instrument employed in this study was adapted from the *Index for Inclusion* (Booth & Ainscow, 2002, 2011), a reflective framework originally designed for school self-evaluation rather than psychometric measurement. Because the Index does not function as a validated scale, its indicators were reformulated into closed-ended, five-point Likert-scale items across three theoretically derived domains: ISC (20 items), ISP (18 items), and ISPr (21 items), with specific reference to the inclusion of SWDs.

Given the contextual re-specification of these indicators, psychometric validation was required before to full-scale administration. An EFA was therefore conducted using pilot data (n = 154). Separate EFAs were first performed for each dimension, followed by a comprehensive EFA across all 59 items. The participant-to-item ratios for the dimension-level analyses ranged from 7.33:1 to

8.56:1, exceeding the minimum recommendations of 5–10 participants per item (Hair et al., 2010; Costello & Osborne, 2005). Although the ratio for the full instrument (2.61:1) was modest, MacCallum et al. (1999) note that smaller samples may still yield stable solutions when communalities are high, and factors are well-determined (Fabrigar et al., 1999). Sampling adequacy was evaluated using the Kaiser–Meyer–Olkin (KMO) Measure of Sampling Adequacy and Bartlett's Test of Sphericity. For the full 59-item tool, KMO = 0.92, exceeding the suggested threshold of 0.60 (Hair et al., 2010), and Bartlett's test was significant ($\chi^2 = 8254.63$, df = 1711, $p < .001$), confirming factorability of the correlation matrix. The KMO statistics for the subscales were between 0.85 and 0.90, with each result of the Bartlett's tests significant ($p < .001$).

Factor analysis was conducted using Principal Axis Factoring (PAF) with Direct Oblimin Rotation in SPSS. This is because the PAF method does not require a multivariate normal distribution, which is perfect for data analyzed using Likert scales (Fabrigar et al., 1999; Costello & Osborne, 2005). The direct oblimin rotation procedure was adopted based on the theory that shows correlation among ISC, ISP, and ISPr variables (Tabachnick & Fidell, 2019). The item selection process followed the criteria where factor loading was at least ≥ .40; communality was ≥ .40 while cross loadings were minimized (Field, 2018). Two factors were extracted in each of the dimensions, leading to six factors, namely, BC and EIV; PAI, and OS; TL, and RP. Because of the removal of items that had poor factor loadings, the new instrument now consisted of 54 items. Consequently, EFA results supported the differentiated factor model.

3.10.2. Confirmatory Factor Analysis (CFA)

After the EFA analysis on the pilot data set, the CFA analysis was carried out on the independent main study data set (n = 424) to examine the adequacy and consistency of the six-factor measurement model. CFA offers an effective way of assessing if empirical data conform to a theoretically postulated measurement model (Pallant, 2016). The analysis was carried out using AMOS version 25 and maximum likelihood estimation. Three key parts of the measurement model were assessed in the CFA process. First, the level of association between indicators and their latent variables through factor loadings was assessed for significance. Second, the covariances among the latent variables were analyzed. Third, the goodness of fit of the six-factor model was tested.

- **Maximum Likelihood (ML) Estimation Method**

Although SEM can be estimated using several alternative procedures (e.g., Generalized Least Squares, Unweighted Least Squares, Asymptotic Distribution-Free methods), the ML approach was selected as the primary estimation method. ML estimation is widely used due to its statistical efficiency and desirable large-sample properties (Brown, 2015; Hair et al., 2014; Schumacker & Lomax, 2016).

SEM may be done using different methods, such as Generalized Least Squares, Asymptotic Distribution-Free, and more. However, the researcher decided to use the Maximum Likelihood (ML) estimation technique as the main one since this approach is characterized by its efficiency and good performance when working with large sample sizes (Brown, 2015; Hair et al., 2014; Schumacker & Lomax, 2016). In the process of preliminary data screening, a certain deviation from multivariate normality was observed. According to Bollen & Stine (1992) and Kline (2016), skewness higher than 3.0 and kurtosis higher than 21.0 adversely affect the results of SEM due to distortion of parameter estimations and model fit indicators. Data transformation or other options, such as bootstrapping, may be considered, but we are not going to transform the data as suggested by Kline (2016), since perceptual constructs may be distorted while transforming to normality. Regrettably, Robust ML estimation could not be done using AMOS, and the asymptotic distribution-free approach resulted in a singular covariance problem, which is why it is going to use ML and bootstrapping techniques.

- **Bootstrapping**

The technique of bootstrapping was used to improve the maximum likelihood estimates due to the non-normality of the response distribution in data gathered from teachers in the sampled primary schools. Bootstrapping is a sampling technique that creates different samples (with replacement) from the original sample in order to evaluate the reliability and accuracy of the parameter estimates (Byrne, 2016; Nevitt & Hancock, 2001). Instead of assuming that the Likert scale responses from teachers about the ISC, ISP, and ISPr were multivariate normal, bootstrapping computes standard errors and confidence intervals from empirical data.

This study involved a bootstrap sample size of 2000 being taken from the primary data set (n=424). For chi-square statistics modification and p-value correction, Bollen-Stine's (1993) bootstrapping

approach was utilized. Such an approach becomes particularly important in the case of SEM use under the conditions of low-resource availability in the public school environment, where normality violations can be caused by the clustered environment and similarities in data reporting. For the estimation of parameters, a 95% bias-corrected confidence interval was calculated. Through obtaining empirical standard errors and confidence intervals, the bias of model fit indices and parameter estimates regarding non-normality was reduced.

- **Model Fit Evaluation Criteria**

The fit of the model shows the extent to which the variance-covariance matrix of the hypothetical model conforms to the variance-covariance matrix obtained from the sample data. Close conformity shows that the hypothesized model is an accurate representation of the structure of the data (Schumacker & Lomax, 2016). However, to obtain accurate results using the indexes, several indexes were calculated (Hu & Bentler, 1999).

Absolute fit indices calculate the degree to which the proposed model captures the data observed independent of any alternative model. Absolute test of fit used for this study included the Chi-Square (χ^2), Chi-Square to Degrees of Freedom ratio (CMIN/DF), Goodness of Fit Index (GFI), Adjusted Goodness of Fit Index (AGFI), Root Mean Square Error of Approximation (RMSEA), and Standardized Root Mean Square Residual (SRMR). The use of GFI and AGFI values above .90 is acceptable (Hair et al., 2014). RMSEA value below .05 is considered excellent, whereas values within the range of .05 and .08 are reasonable fits according to Arbuckle (2012); Hair et al. (2014). A value of .08 or lower is considered a satisfactory fit of RMSEA (Byrne, 2016). Ratios of CMIN/DF below 5.0 are considered acceptable, with values below 3.0 showing evidence of very good fit (Finch et al., 2016; Schumacker & Lomax, 2016).

Incremental fit indices or comparative fit statistics measure the model's fit in comparison to a null or base model. Incremental fit statistics utilized in this study include the Comparative Fit Index (CFI), Normed Fit Index (NFI), Tucker–Lewis Index (TLI), and Incremental Fit Index (IFI). Scores closer to 1.0 represent good fit values where CFI > .95 and NFI, TLI, and IFI > .90 are generally accepted (Byrne, 2016; Meyers et al., 2006).

Parsimonious fit indices took into account the concept of parsimony in terms of penalizing fit measures according to the number of parameter estimates, which comprised the Parsimonious Normed Fit Index (PNFI) and Parsimonious Comparative Fit Index (PCFI). The threshold for good parsimony was .50 and above (Hair et al., 2014; Kline, 2016). In accordance with the guidelines set forth by Hu & Bentler (1999), model fit was determined based on the overall trend of fit measures rather than on one cut-off value alone.

3.10.3. Reliability and Validity Analysis

This study used instruments adapted from the Index for Inclusion and had no psychometric foundation, resulting in doubts about its validity. Despite the identification of a six-factor structure after factor analysis, there is no guarantee of internal consistency and clarity between latent factors. Thus, reliability and validity had been determined before the examination of structures.

Reliability: For evaluating internal reliability, the researcher first employed Cronbach's alpha coefficient (α) to check whether a collection of items was consistent in representing a construct at an institutional level (Ho, 2006). It was especially pertinent to this study because, during its development, the tools were converted from reflective indicators to scale items. This step had potential risks of redundancy, low correlation, or a change in semantics. In keeping with scholars' suggestions, the researcher took alpha coefficients equal to or greater than 0.70 as adequate measures (Nunnally, 1978; Field, 2013; Kline, 2016; Pallant, 2016). Yet, these measures, along with factor loadings and item compositions, were scrutinized for the sake of not having inflated coefficients due to item overlap. In order to overcome the drawbacks of alpha reliability, Composite Reliability (CR) with standardized CFA loadings was calculated. It takes into account measurement error, which makes it appropriate to be employed in SEM, with CR $\geq$ 0.70 being considered acceptable (Hair et al., 2014; Kline, 2016).

Construct Validity: The process of assessing construct validity entailed measuring convergent and discriminant validity. Considering the association among cultural concepts, policies, and practices in inclusive education, it was important to make distinctions empirically.

Convergent Validity

Convergent validity refers to the degree to which the different operationalization of the same construct exhibit consistency regarding variance (Brown, 2015). This test relied on three primary assumptions. First, there was an assessment of the standardized factor loadings, in which loadings above 0.50 are deemed satisfactory. Factor loadings above 0.70 are said to offer strong support of convergent validity. Factor loadings need to be both statistically and theoretically significant. Second, there was a test of the CR values in order to prevent the problem of high internal consistency being caused by a few indicator loadings. Third, AVE values were examined, where constructs having AVE values above 0.50 indicate that the construct accounts for more than 50 percent of the variance in the indicators. Constructs with weak AVE values are evaluated in terms of theoretical importance.

Discriminant Validity: It was examined by checking if the six latent variables – BC, EIV, PAI, OS, TL, and RP – had differences despite the similar concepts among them. To start with, it considered the correlation between these latent variables. The correlation coefficient exceeding 0.80 was interpreted as an indication of possible similarity among the latent constructs (Byrne, 2016; Finch et al., 2016; Hair et al., 2014). Considering the interrelatedness of the inclusive schools process, it was expected to have moderate correlation coefficients, but a very high correlation may imply a redundant association instead of a meaningful connection. Afterward, it tested the Maximum Shared Variance (MSV) against the Average Variance Extracted (AVE). Discriminant validity would be confirmed if AVE was higher than MSV, meaning that the latent variable accounted for greater variation using its indicators than other variables.

In conclusion, the reliability and validity of the constructs were determined to be related constructs. Internal consistency was proved via Cronbach's Alpha and composite reliability, while convergent validity was proven using the factor loadings, CR, and AVE. Discriminant validity was proven by analyzing inter-construct correlation and MSV-AVE ratio. In general, the results show that the modified construct is a distinct construct within the school environment being studied.

3.11. Data Analysis Method

Quantitative Data

The quantifiable data were analyzed using SPSS version 25.0. The process of data screening was undertaken before conducting inferential analyses. This process entailed checking whether the data were coded correctly, whether there were missing values, and how measurement scales were constructed. Questions in the questionnaire with negative statements had their responses reverse-coded so that high values would be indicative of higher levels of perceptions of inclusivity. If the questions had not been reverse-coded, the reliability estimates of the scale would have been inaccurate, and mean differences could have resulted erroneously. Descriptive analyses were conducted in order to give information regarding participant demographics as well as to check the distributional characteristics of the perception scales.

For conducting the one-sample t-test, its basic assumptions were carefully examined. In this regard, the data revealed selection of randomization and independence of observations (Gravetter & Wallnau, 2017). Also, a normal sampling distribution was satisfied, particularly for $n \geq 30$. The dependent variable also needs to be measured using a continuous interval scale (Coakes & Steed, 2003). Lastly, the absence of potential outliers was checked using boxplot analysis (Wilcox, 2012).

Based on this rationale, one-sample t-tests were performed to test the hypothesis that teachers viewed their schools as being inclusive environments for SWDs based on the variables of ISC, ISP, and ISPr. The test value used in these tests was 3.00, which corresponds to the neutral point of the five-point Likert scale (neither agree nor disagree). Since the calculations involved the aggregation of scale scores rather than the analysis of individual ordinal items, the distribution of values obtained was considered to be at least an approximation of interval-scale measurement, thus making it possible to apply parametric methods (Carifio & Perla, 2008; Norman, 2010; Field, 2013). In this approach, the neutral point is understood as the position of indifference toward the issue in question (Boone & Boone, 2012), and any departure from 3.00 was viewed as indicating a directional bias.\

For the independent t-test, similar conditions were taken into account. Particular attention was given to whether the two groups were independent from one another and whether the variation

between groups remained reasonably similar. This was checked through Levene's test, while Welch's correction was considered whenever unequal variances appeared in the data (Howell, 2013; Delacre et al., 2017). Given the relatively adequate sample size (n=424), minor departures from normality were not considered problematic (Gravetter & Wallnau, 2017). The data were also screened for unusual scores, although no influential outliers were identified (Wilcox, 2012). Based on these checks, the independent-samples t-test was employed to examine differences in teachers' perceptions across gender and qualification categories.

For the one-way ANOVA, the same assumptions were employed in the analysis, including a check for variance homogeneity through Levene's test and other methods when necessary (Field, 2018). Afterward, one-way ANOVA was performed to assess differences in means among age, teaching experience, teaching experience with SWD, and disability severity perception. These variables were considered categorical grouping factors rather than independent predictors based on their definition. When omnibus test results were statistically significant, the Scheffé post hoc test was conducted to determine differences between groups. This test was chosen because of its conservativeness in controlling Type I error rates and relative robustness in unequal sample sizes, which could be justified given the exploratory character of subgroup analysis. The effect sizes were calculated together with statistical results, with d for the t-test and $\eta 2$ for one-way ANOVA. When homogeneity of variance was not met, Welch's correction was used.

To examine the structural relationships among inclusive school culture, policy, and practices, SEM was conducted using AMOS version 25. SEM was selected because it allows simultaneous estimation of measurement and structural parameters while accounting for measurement error (Byrne, 2016; Hair et al., 2019). Given the theoretical interdependence among culture, policy, and practice, a multivariate approach was necessary to avoid biased parameter estimates that may arise from isolated regression analyses. The structural analysis proceeded in two stages. First, CFA evaluated the adequacy of the measurement model. Only after establishing acceptable model fit and construct validity were structural paths estimated. Overall model fit was evaluated using multiple indices, including χ^2, CFI, TLI, and RMSEA, consistent with established SEM guidelines (Hu & Bentler, 1999; Kline, 2023). Model adequacy was interpreted based on the collective pattern of indices rather than strict adherence to isolated cutoff values.

In the structural model, direct causal relations were assumed between inclusive culture and policy, policy and practice, and between culture and practice. The policy variable was set up as a mediator between culture and practice, reflecting the design philosophy of the Index for Inclusion. Consequently, the indirect effect was investigated to establish whether policy mediated between the two variables. Considering the departure from multivariate normality, bootstrapping was used to ensure accurate standard errors and confidence intervals. In particular, Bollen-Stine bootstrap procedures using 2000 samples drawn from the main sample (n = 424) were performed to produce standardized path coefficients (β) and p-values (Blunch, 2012; Byrne, 2016; Hayes, 2018). The criterion for statistical significance was set at the 95% confidence level. An indirect effect was said to be statistically significant if the confidence interval did not include zero. The output from these tests, which includes goodness-of-fit indices, standardized coefficients, and indirect effects, is summarized in Chapter 4. Together, this process of measurement testing, mean comparison, group difference testing, and SEM modeling was aimed at examining the inclusiveness construct using increasingly sophisticated methods of analysis instead of one test alone.

Qualitative Analysis

Thematic analysis was carried out on the basis of Braun and Clarke's (2006) six phases to examine the views of the teachers regarding ISC, ISP, and ISPr. This method was chosen as the analysis focused on identifying patterned meanings in cases and not on quantifying the occurrence of responses. The data analysis included a process of familiarizing oneself with the data, developing initial codes, forming themes, refining the themes, and constructing interpretations from the themes based on participant descriptions. Thematic analysis was not solely an inductive process. Although the themes identified emerged through the analysis of the FGDs, KII transcripts, field notes, and documents, the process of coding was influenced by the theoretical underpinning provided by the Index for Inclusion as well as the outcomes from the quantitative phase.

The researcher interacted with the dataset in an iterative fashion, going back and forth between transcripts and coded excerpts to guarantee consistency within and distinguish among themes. The massive amount of qualitative data was condensed based on abstraction instead of summarization. Themes were only kept if patterned data supported them, and wherever possible, observational or documentary evidence. The narrative analysis is further validated using verbatim citations, which

enable participant accounts to support analysis claims rather than functioning solely as decoration (Braun & Clarke, 2006; Creswell & Poth, 2018).

3.12. Ethical Considerations

Ethical clearance was sought through institutional procedures before data collection. The project received approval from the Department of Special Needs and Inclusive Education at AAU and was thereafter approved by the AACAEB and sub-city education departments. These steps were taken as part of the procedure required by the bureaucratic structure in charge of public schools. It is important to note that, because of the nature of the subject matter that might involve sensitive matters, efforts were made to manage professional and institutional sensitivities.

Participation was completely voluntary and done with the knowledge and agreement of those involved. With the surveys, this knowledge and agreement were done verbally through information provided both in writing and verbally detailing the purposes and procedures of the research and the ability to withdraw from the study without penalty (Creswell & Poth, 2018). Written consent was required for FGDs and KII. Confidentiality and anonymity were viewed as conditional rather than as absolute conditions. The surveys collected no identifiable information from the subjects. In the focus groups, subjects were made aware of the limitations of anonymity and asked to maintain the confidentiality of any stories that came out of the session.

The data protection protocol was well outlined beforehand and adhered to throughout. The audio tapes and the transcriptions were saved on a password-protected storage device, which only the researcher had access to. All school and individual names were pseudonymized in the entire study process. This was done in accordance with the APA guidelines of beneficence, non-maleficence, and justice (APA, 2017). Selection of the participants was based on certain criteria so as to balance the participant selection rather than make it convenient (Teddlie & Tashakkori, 2009).

CHAPTER FOUR

RESULTS

4.1. Quantitative Findings: Phase I

4.1.1. Demographic Characteristics of the Respondents

The following section provides a brief description of the 424 public primary school teachers participating in the study. It is essential to have knowledge about the demographic details of the participants in order to present the required background regarding their views on the issues of study. The demographic variables involved in this study are gender, age, number of years of teaching experience, qualification, experience in working with SWDs, and impairment level, as reported in Appendix D (Table 4.1). Gender balance among the participants was almost equalized, with 206 male teachers representing 48.6%, while 218 female teachers comprised 51.4% of the respondents. Age groups of participants involved four distinct groups, suggesting involvement from participants at different phases of their career lives. 59 teachers, who made up 13.9% of the survey takers, were 30 years of age and below, 129 teachers (30.4%) were between 31 and 40 years old, 117 teachers (27.6%) were 41 to 50 years old, and finally, 119 teachers, constituting 28.1%, were over 51 years old.

In terms of educational qualifications, 198 teachers (46.7%) held diplomas, whereas 226 teachers (53.3%) possessed bachelor's degrees. Likewise, teachers' teaching experience differed from one category to another. Sixty teachers (14.2%) were found with up to five years of teaching experience, 99 teachers (23.3%) with six to ten years, 115 teachers (27.1%) with eleven to fifteen years, and 150 teachers (35.4%) with more than sixteen years of teaching experience. In terms of experience in teaching SWDs, 159 teachers (37.5%) revealed their lack of teaching experience in this regard. Of those who had such experience, 124 teachers (29.2%) were found with up to five years of experience, 88 teachers (20.8%) with six to ten years, and 53 teachers (12.5%) with more than eleven years of experience.

Perceptions regarding the severity of SWDs also differed among teachers. 85 respondents (20.0%) indicated their inability to measure severity. However, the majority of the respondents (170,

40.1%) considered disabilities to be mild in nature, and another 127 respondents (30.0%) regarded them to be moderate. Only a few (42, 9.9%) respondents found that disabilities were severe and profound. Sixty percent of all the respondents found disabilities to be mild in nature, whereas 90.1% regarded disabilities to be mild or moderate. Thus, it can be concluded that the demographic characteristics show heterogeneity on the basis of age, qualifications, years of teaching experience, exposure to SWDs, and perceptions of disability severity.

4.1.2. Levels of Inclusive School Culture, Policy, and Practice

This section provides study results regarding the extent to which teachers view their school contexts as being inclusive for SWDs in primary schools of Addis Ababa. The assessment centered on ISC, ISP, and ISPr using validated instruments consistent with the directives of inclusive education in Ethiopia. Considering that teachers in public primary schools of Addis Ababa normally operate within a school setting characterized by large class sizes, scarce teaching materials, and inconsistent administration support, this study employs these measures as empirical evidence of the process of implementing inclusive education in practice, not merely on paper.

Before analyzing the data, it is important to validate the assumptions of the one-sample t-test. Independence of observations was taken care of using multistage probability sampling (cluster, simple random, and stratified systematic sampling). All the teachers sampled independently contributed to the database, with a total of 424 teachers involved. The assumption of normality is also met using the central limit theorem, considering that n = 424. The variables (ISC, ISP, and ISPr) have been rated using a five-point Likert scale, which is treated as continuous. After this, one-sample t-tests were conducted with 3.00 as the basis for reference to establish if there was any significant departure from neutrality among the perceptions held by the teachers. Any positive and significant departure from 3.00 denotes perceptions that are above the neutral threshold of inclusivity, while a negative departure suggests perceptions that fall below the neutral inclusivity benchmark.

One-sample *t*-tests were then conducted using the scale midpoint (3.00) as the reference value to determine whether teachers' perceptions significantly deviated from neutrality. In this framework, the midpoint represents a position of neither agreement nor disagreement with statements on inclusion. Positive and statistically significant deviations from 3.00 indicate perceptions above a

neutral inclusivity threshold, whereas negative deviations reflect perceived inadequacy relative to this benchmark. Non-significant results are interpreted as ambivalence or conditional endorsement. Results are presented separately for ISC, ISP, and ISPr to allow a structured comparison across cultural, policy, and practice dimensions.

4.1.2.1. Levels of Teachers' Perceptions of the Inclusiveness of School Culture

This subsection presents the results concerning teachers' perceptions of ISC within Addis Ababa public primary schools. ISC captures the relational and normative environment of the school, including shared values, collegial support, respect for diversity, and collective responsibility toward SWDs. In these public schools, cultural norms are shaped not only by formal policy guidance but also by teacher collaborative practices, leadership signaling, and everyday classroom interactions under resource constraints. Because school culture operates as the foundational condition through which policy intentions are interpreted and classroom practices are shaped, understanding teachers' perceptions at this level is analytically central to the study. In public primary schools serving academically heterogeneous and resource-constrained student populations, cultural norms regarding belonging, collaboration, and respect for difference significantly influence whether inclusion is enacted consistently or selectively.

A one-sample t-test was conducted using 3.00 as the neutral benchmark. A statistically significant positive mean difference indicates that teachers perceive their school culture as affirming inclusive norms within their working environments. A non-significant difference suggests mixed or conditional experiences of inclusivity, potentially varying across classrooms or leadership practices. A statistically significant negative deviation indicates that aspects of school culture are perceived as insufficiently supportive of SWDs within these schools. The results are presented in Table 4.2 and interpreted at the dimension, sub-dimension, and item levels to identify areas where inclusive culture appears relatively established and areas where it remains comparatively fragile in the participating public primary schools of Addis Ababa.

Table 4. 2.

One-Sample t-test Statistics for Teachers' Perceptions of ISC for SWDs (n=424, DF=423)

Items	Mean	SD	t(423)	p	95% CI	Cohen's d
Building Community (*BC)*						
SWDs are welcomed and treated as valued members.	2.62	0.71	-10.95	<.001*	[-0.45, -0.31]	-0.53
Teachers/staff collaborate to support SWDs.	2.63	0.71	-10.58	<.001*	[-0.43, -0.30]	-0.51
SWDs often excluded from participation (Rev.)	2.66	0.71	-9.91	<.001*	[-0.41, -0.27]	-0.48
Mutual respect and understanding b/n staff & students	2.66	0.75	-9.24	<.001*	[-0.41, -0.27]	-0.45
Teachers and parents of SWDs communicate regularly	2.61	0.73	-11.01	<.001*	[-0.46, -0.32]	-0.53
Leaders promote and model inclusive values	2.67	0.76	-8.90	<.001*	[-0.40, -0.26]	-0.43
SWDs encouraged to express opinions.	2.66	0.76	-9.28	<.001*	[-0.41, -0.27]	-0.45
SWDs rarely develop a sense of belonging (Rev.)	2.72	0.75	-7.80	<.001*	[-0.35, -0.21]	-0.38
School maintains trust-based partnerships with families	2.61	0.73	-10.88	<.001*	[-0.46, -0.32]	-0.53
BC Composite	**2.65**	**0.58**	**-12.52**	**<.001***	**[-0.41, -0.30]**	**-0.60**
Establishing Inclusive Values (EIV)						
School promotes inclusive values, respecting rights	2.92	0.84	-1.85	.066	[-0.16, 0.00]	-0.09
Respect for rights and dignity evident in school life	2.87	0.79	-3.33	.001*	[-0.20, -0.05]	-0.16
Inclusion enhances participation and achievement	2.92	0.86	-1.87	.062	[-0.16, 0.00]	-0.09
SWDs are valued equally as active members	2.84	0.78	-4.29	<.001*	[-0.24, -0.09]	-0.21
School fails for fairness and equal treatment (Rev.)	2.93	0.91	-1.65	.099	[-0.16, 0.01]	-0.08
School maintains a discrimination-free environment	2.72	0.86	-6.79	<.001*	[-0.37, -0.20]	-0.33
School promotes respectful peer interaction	2.77	0.78	-5.97	<.001*	[-0.30, -0.15]	-0.29
School setting fails to help SWDs feel confident (Rev.)	2.89	0.74	-3.08	.002*	[-0.18, -0.04]	-0.15
Teachers/Leaders hold high expectations for SWDs.	2.85	0.84	-3.71	<.001*	[-0.23, -0.07]	-0.18
EIV Composite	**2.86**	**0.66**	**-4.44**	**<.001***	**[-0.21, -0.08]**	**-0.21**
Inclusive School Culture (ISC)	**2.75**	**0.61**	**-8.44**	**<.001***	**[-0.31, -0.19]**	**-0.41**

Note. Test Value = 3. CI = Confidence Interval for the Mean Difference. Cohen's *d* = (M – 3) / SD. "R" denotes reverse-scored items. ***** indicates statistical significance at p<.005.

For this study, ISC signifies the extent to which the overall ethos, norms, and relational climate of the school—encompassing everyday interactions, shared expectations, and collective understandings—promote belonging, respect, equitable participation, and recognition of SWDs as full members of the school community. ISC is operationalized through the combined sub-dimensions of BC and EIV. A one-sample t-test was conducted to assess teachers' overall perceptions of ISC in selected government primary schools of Addis Ababa, using the neutral benchmark mean of 3.00 as the test value. The ISC composite index (M = 2.75, SD = 0.61) demonstrated a statistically significant negative deviation from this benchmark, t(423) = –8.44, p < .001, 95% CI [–0.301, –0.191], with a small-to-medium effect size (Cohen's d = –0.41).

Substantively, this finding indicates that teachers perceive the prevailing school culture as falling below a neutral inclusivity threshold. While inclusive values may be formally articulated within institutional discourse, the relational and normative environment experienced in daily practice

does not consistently reflect strong cultural endorsement of inclusion for SWDs. The magnitude of the effect suggests that this is not merely a marginal deviation but reflects a moderately meaningful gap between aspirational inclusivity and lived school culture.

a) Building Community (BC) for Students with Disabilities

As presented in Table 4.2 for one-sample t-tests results across all BC items, mean scores were significantly below the bench mark value of 3.00 , indicating that teachers perceived the communal foundations of inclusion as falling short of an inclusive standard. For instance, teachers reported significantly lower agreement that SWDs are "warmly welcomed and treated as valued members" ($M = 2.62$, $SD = 0.71$), $t(423) = –10.95$, $p < .001$, 95% CI [–0.45, –0.31], $d = –0.53$. Similarly, perceptions that teachers and parents of SWDs communicate regularly ($M = 2.61$, $SD = 0.73$), $t(423) = –11.01$, $p < .001$, 95% CI [–0.46, –0.32], $d = –0.53$, and that trust-based partnerships with families are sustained ($M = 2.61$, $SD = 0.73$), $t(423) = –10.88$, $p < .001$, 95% CI [–0.46, –0.32], $d = –0.53$, were significantly below the benchmark.

These results indicate perceived weaknesses in sustained relational coordination between schools and families. Items reflecting broader communal norms and leadership practices followed a similar pattern. Ratings for mutual respect among staff and students ($M = 2.66$, $SD = 0.75$), leaders' modeling of inclusive values ($M = 2.67$, $SD = 0.76$), and encouragement for SWDs to express their opinions ($M = 2.66$, $SD = 0.76$) were all significantly below the test value ($p < .001$), with small-to-medium effect sizes (d ranging from –0.43 to –0.45). Even reverse-coded items capturing exclusionary experiences indicated perceived fragility in belonging and participation. At the aggregate level, the BC composite score ($M = 2.65$, $SD = 0.58$) demonstrated a statistically significant negative deviation from the benchmark, $t(423) = –12.52$, $p < .001$, 95% CI [–0.41, –0.30], $d = –0.60$, indicating a moderate negative effect. Substantively, this suggests that teachers perceive notable gaps in the relational infrastructure—such as collaborative routines, inclusive leadership signaling, and consistent family engagement—that would otherwise anchor SWDs more securely within the social life of the school.

b) Establishing Inclusive Values (EIV) for Students with Disabilities

As presented in Table 4.2, the EIV composite score (M = 2.86, SD = 0.66) was significantly below the neutral value, t(423) = –4.44, p < .001, 95% CI [–0.21, –0.08], d = –0.21. Although the effect size is small, the direction and statistical significance of the deviation indicate that teachers do not perceive inclusive values as fully embedded in routine school practice. Item-level analysis reveals a differentiated pattern. Items reflecting more formal or symbolic commitments to inclusion did not significantly differ from the benchmark, suggesting attitudinal ambivalence rather than unequivocal endorsement. For example, teachers' ratings of whether the school "promotes inclusive values, respecting the rights of all students" (M = 2.92, SD = 0.84), t(423) = –1.85, p = .066, and whether "inclusion enhances participation and achievement of all students" (M = 2.92, SD = 0.86), t(423) = –1.87, p = .062, did not significantly deviate from 3.00.

Likewise, the negatively worded item concerning fairness and equal treatment for SWDs was non-significant, indicating neither strong affirmation nor clear rejection of the school's normative inclusivity. By contrast, items reflecting the observable enactment of inclusive values were significantly below the benchmark. Teachers reported lower agreement that "respect for the rights and dignity of all students is evident in school life" (M = 2.87, SD = 0.79), t(423) = –3.33, p = .001, and that SWDs "are valued equally as active members" of the school community (M = 2.84, SD = 0.78), t(423) = –4.29, p < .001. Similarly, perceptions that the school consistently maintains a discrimination-free environment (M = 2.72, SD = 0.86), t(423) = –6.79, p < .001, and that teachers and leaders hold high expectations for SWDs (M = 2.85, SD = 0.84), t(423) = –3.71, p < .001, were significantly below the neutral point.

Collectively, these findings indicate a modest but consistent normative–operational gap in the participating schools. While inclusive values are not categorically rejected, teachers' responses suggest that their translation into consistent, day-to-day practices remains uneven, particularly with respect to non-discrimination, respectful peer interaction, and sustained high expectations for SWDs. This pattern aligns with the broader ISC results reported earlier, where the overall composite score also fell significantly below the neutral benchmark. From teachers' perspectives, therefore, inclusive values appear only partially institutionalized within routine school practices in the participating primary schools in Addis Ababa.

4.1.2.2. Levels of Teachers' Perceptions of the Inclusivity of School Policy (ISP)

This subsection examines teachers' perceptions of ISP in Addis Ababa government primary schools, focusing on policy awareness, clarity, and implementation in supporting SWDs. The analysis considers two sub-dimensions, PAI and OS, to assess how national inclusive education directives are translated into school-level practice. A two-tailed one-sample t-test was conducted to determine whether the mean perception score differed significantly from the neutral value of 3.00. The results are presented in Table 3.

Table 4. 3.

One-Sample Statistics for Teachers' Perceptions of Inclusive School Policy for SWDs

Indicators	Mean	SD	t(423)	p	95% CI	Cohen's d
Policy Awareness and implementation (PA)						
National education policies prioritize	2.56	0.79	-11.48	<.001*	[-0.52, -0.37]	-0.56
Familiar with national/local policy frameworks.	2.50	0.82	-12.52	<.001*	[-0.58, -0.42]	-0.61
Collaboration with leaders	2.47	0.81	-13.32	<.001*	[-0.60, -0.45]	-0.65
School's guiding documents reflect inclusion	2.49	0.87	-12.08	<.001*	[-0.60, -0.43]	-0.59
School rules and routines do not support inclusion (Rev.)	2.57	0.82	-10.77	<.001*	[-0.50, -0.35]	-0.52
Equal admission opportunities are ensured	2.49	0.85	-12.38	<.001*	[-0.59, -0.43]	-0.60
Procedures for identifying/assessing SWDs.	2.47	0.86	-12.54	<.001*	[-0.61, -0.44]	-0.62
School lacks accessible materials for SWDs (Rev.)	2.52	0.80	-12.24	<.001*	[-0.55, -0.40]	-0.60
Accessible school's infrastructure and facilities	2.48	0.86	-12.56	<.001*	[-0.60, -0.44]	-0.61
PAI	**2.51**	**0.67**	**-15.16**	**<.001***	**[-0.56, -0.43]**	**-0.74**
Organizing Support for Inclusion (OS)						
School's coordinated support system for SWDs	2.68	0.86	-7.69	<.001*	[-0.40, -0.24]	-0.37
School's designated inclusion team to support SWDs	2.42	0.84	-14.22	<.001*	[-0.66, -0.50]	-0.69
Development and implementation of IEPs for SWD	2.42	0.85	-14.03	<.001*	[-0.66, -0.50]	-0.69
Teachers receive inadequate training (Rev.)	2.67	1.05	-6.39	<.001*	[-0.43, -0.23]	-0.31
School prioritizes resource allocation for inclusion	2.44	0.90	-12.75	<.001*	[-0.65, -0.47]	-0.62
School facilitates collaboration	2.53	0.94	-10.31	<.001*	[-0.56, -0.38]	-0.50
School regularly reviews & improves of its support	2.43	0.85	-13.88	<.001*	[-0.65, -0.49]	-0.67
School tailors support services to individual needs	2.41	0.87	-14.01	<.001*	[-0.68, -0.51]	-0.68
OS	**2.50**	**0.73**	**-14.12**	**<.001***	**[-0.57, -0.43]**	**-0.68**
Inclusive School Policy (ISP)	**2.50**	**0.68**	**-15.11**	**<.001***	**[-0.56, -0.43]**	**-0.74**

Note. Test Value = 3. CI = Confidence Interval for the Mean Difference. Cohen's *d* = (M – 3) / SD. "R" denotes reverse-scored items. *indicates statistical significance at p<.005*p*<.005.

For this study, ISP signifies the extent to which inclusive education frameworks, school regulations, and guiding documents are understood, interpreted, and operationalized by teachers and school leadership within mainstream public primary schools in Addis Ababa to prioritize equitable access, participation, and support for SWDs. The ISP composite score was significantly

lower than the neutral benchmark (M = 2.50, SD = 0.68), t(423) = –15.11, p < .001, 95% CI [–0.56, –0.43], d = –0.74, as above in Table 4.3. This moderate-to-large negative deviation indicates that teachers do not experience inclusive policy directives as coherently embedded within the regulatory and administrative functioning of their schools.

Substantively, these results suggest that within Addis Ababa public primary schools—where policy directives are mediated through district offices, school leaders, and internal documentation—teachers perceive inclusive policy commitments as insufficiently translated into actionable school-level procedures. Rather than operating as a consistent administrative scaffold that structures classroom practice, policy frameworks are experienced as weakly integrated into admission processes, documentation routines, identification procedures, and infrastructure planning. In this institutional context, policy emerges not as an enabling coordination mechanism but as a domain marked by interpretive and operational discontinuities between directive and enactment. This composite shortfall provides context for examining the PAI and OS sub-dimensions, which trace how policy awareness, leadership collaboration, procedural systems, and school-based support structures interact within Addis Ababa government primary schools.

a) **Policy Awareness and Implementation (PAI)**

As presented in Table 4.3, the PAI composite score was significantly below the neutral benchmark (M = 2.51, SD = 0.67), t(423) = –15.16, p < .001, 95% CI [–0.56, –0.43], d = –0.74, as shown in Table 4.3. This indicates that teachers perceive a substantial gap between inclusive education directives and their school-level institutionalization. At the level of basic policy awareness, teachers reported significantly lower agreement that national education policies prioritize inclusion of SWDs (M = 2.56, SD = 0.79), t(423) = –11.48, p < .001, d = –0.56, and that they are familiar with national and local policy frameworks (M = 2.50, SD = 0.82), t(423) = –12.52, p < .001, d = –0.61. These findings indicate that frontline teachers—who serve as the primary implementers of inclusive education in Addis Ababa classrooms—do not perceive themselves as adequately about or systematically oriented to inclusive policy frameworks.

This awareness gap is mirrored in limited collaboration with school leaders to translate SNIE strategies into action (M = 2.47, SD = 0.81), t(423) = –13.32, p < .001, d = –0.65. Teachers also reported that guiding documents—such as school mission statements and strategic plans—do not

strongly reflect inclusive principles (M = 2.49, SD = 0.87), t(423) = –12.08, p < .001, d = –0.59. These patterns suggest that school leaders in Addis Ababa government primary schools may not consistently embed inclusive directives into formal documentation or collaborative planning routines. Operationally, teachers reported shortcomings in admission equity (M = 2.49, SD = 0.85), identification and assessment procedures (M = 2.47, SD = 0.86), accessible materials (M = 2.52, SD = 0.80), and physical infrastructure (M = 2.48, SD = 0.86), all p < .001. These results indicate that administrative processes—through which inclusion becomes concrete in enrollment, assessment, and environmental accessibility—are not experienced as systematically aligned with inclusive mandates. Collectively, the PAI findings reflect a layered discontinuity within Addis Ababa government primary schools: limited teacher awareness of policy frameworks, constrained leadership-driven translation, and fragmented procedural enactment across admission, documentation, and infrastructure domains.

b) **Organizing Support (OS) for Inclusion of SWDs**

As observed in Table 4.3, the OS composite score was significantly below the neutral benchmark (M = 2.50, SD = 0.73), t(423) = –14.12, p < .001, 95% CI [–0.57, –0.43], d = –0.68. This indicates that teachers perceive support coordination structures as underdeveloped and weakly institutionalized. Teachers reported low agreement that schools have a designated inclusion team (M = 2.42, SD = 0.84), t(423) = –14.22, p < .001, d = –0.69, and that IEPs are developed and implemented (M = 2.42, SD = 0.85), t(423) = –14.03, p < .001, d = –0.69. These results suggest that systematic planning structures, through which individual student needs are translated into instructional adjustments, are not consistently embedded in selected public primary schools.

Teachers further reported inadequate prioritization of resource allocation (M = 2.44, SD = 0.90), limited collaboration among teachers and SNIE educators (M = 2.53, SD = 0.94), and weak review mechanisms for inclusive support services (M = 2.43, SD = 0.85), all p < .001. These patterns indicate that inclusion is not organized as a sustained, school-wide coordination process but is instead experienced as fragmented and weakly monitored. Taken together, OS findings indicate that the organizational architecture required to sustain inclusive education—formal teams, structured planning processes, systematic review mechanisms, and coordinated resource allocation—is not yet consolidated within the sampled public primary schools in Addis Ababa.

4.1.2.3. Levels of Teachers' Perceptions of Inclusivity of School Practice (ISPr)

This subsection assessed teachers' perceptions of ISPr in selected primary schools of Addis Ababa, focusing on how instructional approaches, classroom adaptations, and resource provision support SWDs in everyday classroom settings. In this study, ISPr consists of two sub-dimensions: TL, which refers to teacher-led pedagogical strategies in overcrowded and diverse classrooms, and RP, which concerns the availability and accessibility of learning materials, assistive supports, and environmental adaptations. A two-tailed one-sample t-test was used to examine whether teachers' perceptions differed significantly from the neutral midpoint of 3.00 on the five-point Likert scale. The results are presented in Table 4.4.

Table 4. 4.

One-Sample Statistics for Teachers' Perceptions of Inclusive School Practices for SWDs

Indicators	M	SD	t(423)	p	95% CI	Cohen's d
Teaching-Learning (TL) Practices						
Regularly review and adapt lesson plans	2.43	0.82	-14.27	<.001*	[-0.64, -0.49]	-0.69
Use flexible seating & group arrangements	2.59	0.78	-10.78	<.001*	[-0.48, -0.33]	-0.52
Collaborate with other educators to plan lessons	2.57	0.76	-11.71	<.001*	[-0.51, -0.36]	-0.57
Rarely implement differentiated instructions (Rev.)	2.62	0.79	-10.00	<.001*	[-0.46, -0.31]	-0.48
Use clear instructions and provide extra details	2.67	0.81	-8.39	<.001*	[-0.41, -0.25]	-0.41
Use varied assessment strategies to evaluate SWDs	2.59	0.83	-10.05	<.001*	[-0.48, -0.33]	-0.49
Provide multiple ways for SWDs to engage with	2.56	0.77	-11.63	<.001*	[-0.51, -0.36]	-0.57
Encourage peer tutoring and cooperative learning	2.58	0.77	-11.22	<.001*	[-0.49, -0.35]	-0.55
SWDs lack assessment accommodations (Rev.)	2.68	0.82	-7.92	<.001*	[-0.39, -0.24]	-0.39
Provide feedback and motivational support	2.61	0.76	-10.55	<.001*	[-0.46, -0.32]	-0.51
TL practice	**2.58**	**0.64**	**-13.54**	**<.001***	**[-0.48, -0.36]**	**-0.66**
Resource Provision (RP) Practice						
Collaborate with leaders to ensure resources	2.37	0.93	-13.90	<.001*	[-0.72, -0.54]	-0.68
Resources inadequately meet SWDs' needs (Rev.)	2.43	0.91	-12.79	<.001*	[-0.66, -0.48]	-0.62
Use available materials to support SWDs	2.38	0.96	-13.23	<.001*	[-0.71, -0.52]	-0.64
Ensure equipment and furniture are adapted	2.38	0.89	-14.39	<.001*	[-0.71, -0.54]	-0.70
Use materials and tools from resource center	2.34	0.90	-14.93	<.001*	[-0.74, -0.57]	-0.73
Integrate audiovisual materials and technology	2.35	0.93	-14.25	<.001*	[-0.74, -0.56]	-0.70
SWDs have options for curriculum engagement	2.41	0.96	-12.75	<.001*	[-0.68, -0.50]	-0.62
RP Practice	**2.38**	**0.75**	**-16.92**	**<.001***	**[-0.69, -0.55]**	**-0.82**
Inclusive School Practice (ISPr)	**2.49**	**0.64**	**-16.17**	**<.001***	**[-0.57, -0.44]**	**-0.79**

Note. Test Value = 3. CI = Confidence Interval for the Mean Difference. Cohen's d = (M – 3) / SD. "R" denotes reverse-scored items. *indicates statistical significance at p<.005.

As presented in Table 4.4, a one-sample t-test was conducted to evaluate teachers' perceptions of Inclusive School Practices (ISPr) in selected primary schools in Addis Ababa, using the scale midpoint of 3 as the test benchmark. The ISPr composite mean was substantially and significantly lower than this expected value ($M = 2.50$, $SD = 0.73$), $t(423) = –14.12$, $p < .001$, 95% CI [–0.57, –0.43], Cohen's $d = –0.68$. This medium-to-large negative effect indicates that, overall, teachers experience the day-to-day implementation of inclusive education practices as markedly inadequate and inconsistently realized at the school level.

As shown in Table 4.4, the ISPr composite mean ($M = 2.49$, $SD = 0.64$) was significantly below the benchmark of 3.00, $t(423) = –16.17$, $p < .001$, 95% CI [–0.57, –0.44], $d = –0.79$. This medium-to-large negative effect indicates that teachers, drawing on their day-to-day instructional work in Addis Ababa government primary schools, perceive inclusive practices as inconsistently enacted across planning, delivery, assessment, and resource use. In classrooms characterized by high student–teacher ratios and limited specialized supports, this deviation suggests that inclusive pedagogical and material adjustments are not systematically embedded in routine practice. The composite, therefore, reflects teachers' perceptions that the practical enactment of inclusive schooling for SWDs within these sampled public schools remains below a neutral benchmark.

These composite findings align with the detailed one-sample t-test results for the ISPr sub-dimensions—TL and RP—also reported in Table 4.18. Taken together, the ISPr, TL, and RP results indicate that teachers perceive limitations both in classroom-level instructional adaptations and in school-level resource infrastructures. Within the Addis Ababa public primary school environment, where teachers operate under resource scarcity and procedural routines shaped by sub-city-level administration, ISPr functions as a summative indicator of how teachers evaluate the organization of instruction and resource allocation in relation to SWDs.

a) Teaching-Learning (TL) Practice

As displayed in Table 4.4, the TL composite score ($M = 2.58$, $SD = 0.64$) was significantly below the neutral benchmark, $t(423) = –13.54$, $p < .001$, 95% CI [–0.48, –0.36], $d = –0.66$, indicating that teachers perceive inclusive pedagogical practices as insufficiently institutionalized across planning, instructional delivery, and assessment within their current school routines. At the level of instructional planning, teachers reported limited regular adaptation of lesson plans to

accommodate diverse learner needs (M = 2.43, SD = 0.82), t(423) = –14.27, p < .001, d = –0.69. Given that lesson planning in many of these schools follows standardized curricular pacing guides, the low mean suggests that structured differentiation for SWDs is not consistently embedded in routine planning procedures. Similarly, collaboration with other educators to design inclusive lessons (M = 2.57, SD = 0.76), t(423) = –11.71, p < .001, d = –0.57, was perceived as below the neutral point, indicating that formalized collaborative planning mechanisms for inclusion are not consistently operationalized at the school level. Although some teachers reported providing clearer instructions and additional explanations (M = 2.67, SD = 0.81), t(423) = –8.39, p < .001, d = –0.41, the overall pattern indicates that differentiated instructional strategies and varied assessment approaches (M = 2.59, SD = 0.83), t(423) = –10.05, p < .001, d = –0.49, are not routinely enacted. Within these Addis Ababa classrooms, teachers' responses suggest that inclusive adjustments occur intermittently rather than as standardized professional norms.

b) Resource Provision (RP) Practice

As shown in Table 4.4, the RP composite mean (M = 2.38, SD = 0.75) was significantly below the benchmark of 3.00, t(423) = –16.92, p < .001, 95% CI [–0.69, –0.55], d = –0.82, representing the largest negative effect among the ISPr components. Item-level results indicate that teachers perceive limited collaboration with school leaders to secure sufficient resources for SWDs (M = 2.37, SD = 0.93), t(423) = –13.90, p < .001, d = –0.68, and view instructional and assistive materials as inadequate to meet identified needs (M = 2.43, SD = 0.91), t(423) = –12.79, p < .001, d = –0.62. These perceptions point to constrained school-level resource planning processes rather than isolated classroom decisions. Access to adapted equipment (M = 2.38, SD = 0.89), use of school resource centers (M = 2.34, SD = 0.90), and integration of audiovisual technologies (M = 2.35, SD = 0.93) were likewise rated significantly below the neutral benchmark. In practical terms, teachers report operating in environments where material and technological supports for SWDs are limited, irregular, or insufficiently coordinated. When considered alongside TL results, the RP findings suggest that teachers' appraisal of inclusive practice is shaped not only by instructional strategies but also by institutional constraints embedded in resource allocation and administrative coordination within the sampled Addis Ababa public primary schools.

4.1.3. Group Differences in Inclusive School Culture, Policy, and Practice

This section examined whether teachers in public primary schools in Addis Ababa report systematically different perceptions across ISC, ISP, and ISPr. The analysis considers six demographic variables commonly linked to teachers' orientations toward inclusion: gender, educational qualification, age category, total teaching experience, experience teaching SWDs, and perceived severity of students' impairments. These variables capture both relatively stable attributes (e.g., gender, age) and professionally acquired characteristics that may shift over time (e.g., experience with SWDs), thereby allowing a differentiated view of how inclusivity is evaluated across the teaching workforce.

Group differences in ISC, ISP, and ISPr were examined using independent *t*-tests for binary variables (gender and educational qualification) and one-way ANOVA for variables with multiple categories (age, total teaching experience, experience teaching SWDs, and perceived severity of disability). Where omnibus ANOVA results were statistically significant, Scheffé post hoc tests were employed to identify specific group differences. Effect sizes (Cohen's *d* for *t*-tests and η^2 for ANOVA) are reported alongside *p*-values to distinguish statistical significance from substantive magnitude. Homogeneity of variance was assessed using Levene's test, with Welch's correction applied where necessary.

For the independent *t*-test, all assumptions were met. The comparison groups were independent, and sample sizes were sufficiently large (gender: male = 206, female = 218; qualification: diploma = 198, degree = 226) to support approximate normality via the Central Limit Theorem. The dependent variables were treated as continuous, and Levene's tests were non-significant ($p > .05$) across ISC, ISP, and ISPr, indicating equal variances. No extreme outliers were detected, with standardized residuals falling within ±3. The assumptions for one-way ANOVA were also satisfied. Independence was maintained as each teacher contributed to only one category within each grouping variable. Residual distributions indicated no substantial departures from normality; given that the smallest group size (n = 42) was adequate, the sampling distribution of the F-statistic was considered stable. Homogeneity of variance was supported by non-significant Levene's tests ($p > .05$) across all comparisons, and no influential outliers were observed.

The subsections that follow (Sections a–f) present results for each demographic variable in turn. For each analysis, descriptive statistics and test outcomes are reported in accompanying tables, followed by interpretation of the observed patterns. These interpretations remain grounded in how teachers, as frontline implementers, perceive school culture, policy enactment, and classroom practice under prevailing institutional conditions. Taken together, the analyses provide a differentiated account of how demographic positioning shapes perceptions of inclusivity within the broader organizational and resource context of public primary education.

a) Teachers' Perceptions of School Inclusivity Based on Gender

The next subsection, the independent t-test was conducted to compare mean scores between male and female teachers' perceptions on ISC, ISP, and ISPr.

Table 4.5.

Independent-samples t-test results for teachers' perceptions of ISC, ISP, and ISPr *for SWDs by gender (n = 424, df = 422)*

Dimension	Sex	*n*	*M*	*SD*	*t*	*p*	Mean difference (MD)	95% CI for MD
ISC	Male	206	2.50	0.53	–8.92	< .001	–0.48	[–0.59, –0.38]
	Female	218	2.99	0.58				
ISP	Male	206	2.32	0.58	–5.71	< .001	–0.36	[–0.48, –0.24]
	Female	218	2.68	0.71				
ISPr	Male	206	2.27	0.56	–7.27	< .001	–0.43	[–0.54, –0.31]
	Female	218	2.70	0.65				

Note. Welch's *t* test reported due to violation of homogeneity of variances (Levene's test $p < .05$). Negative mean differences indicate lower scores for male teachers compared with female teachers.

As seen in Table 4.5, female teachers consistently reported more favorable perceptions of ISC, ISP, and ISPr for SWDs than their male counterparts. For ISC, Levene's test was not significant, indicating homogeneity of variances, $F(1, 422) = 1.60$, $p = .207$. The independent t-test revealed a statistically significant difference between male and female teachers, $t(422) = –8.92$, $p < .001$, with female teachers ($M = 2.99$, $SD = 0.58$) reporting higher levels of perceived inclusivity of school culture than male teachers ($M = 2.50$, $SD = 0.53$). The mean difference was –0.48 (95% CI [–0.59, –0.38]), corresponding to a large effect size (Cohen's $d \approx –0.87$), indicating a substantial gender-based disparity in how teachers appraise the ISC for SWDs in the public primary school settings.

For ISP, Levene's test was significant, $F(1, 422) = 6.85$, $p = .009$, signifying unequal variances; then, Welch's correction was applied. Welch's procedure adjusts the degrees of freedom and standard error to account for variance differences and unequal group sizes, providing a more robust estimate of the difference in means under heterogeneity of variance. Results showed a statistically significant difference in perceptions, $t(413.19) = –5.71$, $p < .001$. Female teachers ($M = 2.68$, $SD = 0.71$) reported more positive views of ISP than male teachers ($M = 2.32$, $SD = 0.58$). The mean difference was –0.36 (95% CI [–0.48, –0.24]), with a medium effect size (Cohen's $d \approx –0.55$), signifying that female teachers perceived the policy environment as more supportive of inclusion than male teachers did when interpreting school-level directives and administrative expectations related to SWDs.

For ISPr, Levene's test was not significant, $F(1, 422) = 3.64$, $p = .057$; thus, equal variances were assumed. The independent t-test showed a statistically significant difference in perceived ISPr, $t(422) = –7.27$, $p < .001$, with female teachers ($M = 2.70$, $SD = 0.65$) also reporting higher levels of ISPr than male teachers ($M = 2.27$, $SD = 0.56$). The mean difference was –0.43 (95% CI [–0.54, –0.31]), with a medium-to-large effect size (Cohen's $d \approx –0.71$).

Collectively, these findings show a consistent pattern in which female teachers report more favorable perceptions of ISC, ISP, and ISPr for SWDs than male teachers in the sampled primary schools. The effect sizes, ranging from medium to large, specify that these differences are not marginal in magnitude in the context of everyday practice decision-making and school-level policy interpretation. This gendered pattern in perceptions may reflect differential exposure to, engagement with, or responsiveness to inclusive education initiatives as they are communicated through school leadership, sub-city guidance, and classroom-level responsibilities in these public schools, without implying causal direction or normative judgment.

b) Teachers' Perceptions of School Inclusivity Based on Education Level

In this subsection, the independent t-test was also conducted to compare the mean scores of male and female teachers' perceptions of ISC, ISP, and ISPr according to their educational qualification (diploma vs. degree) in primary schools as displayed in Table 4.6.

Table 4.6.

Independent-samples t-test results for teachers' perceptions of ISC, ISP, and ISPr for SWDs by educational qualification (n = 424, df = 422)

Dimension	Qualification	*n*	*M*	*SD*	*t*	*p*	MD (Diploma – Degree)	95% CI for MD
ISC	Diploma	198	2.74	0.64	–0.50	.621	–0.03	[–0.15, 0.09]
	Degree	226	2.77	0.58				
ISP	Diploma	198	2.49	0.70	–0.38	.706	–0.02	[–0.15, 0.10]
	Degree	226	2.52	0.66				
ISPr	Diploma	198	2.52	0.68	0.61	.544	0.04	[–0.09, 0.16]
	Degree	226	2.48	0.61				

Note. Positive mean differences indicate higher scores for diploma holders; negative differences indicate higher scores for degree holders. All *p* values are two-tailed.

After the Independent t-test analysis, the mean scores for the ISC Scale were M = 2.74 (SD = 0.64) for diploma holders and M = 2.77 (SD = 0.58) for degree holders. Levene's test confirmed the homogeneity of variances, F(1, 422) = 0.78, p = .378. The independent t-test revealed no statistically significant difference between the two groups, t(422) = –0.50, p = .621, with a mean difference of –0.03 and a 95% confidence interval of [–0.15, 0.09]. The effect size was negligible (Cohen's d ≈ –0.05), signifying that within sampled schools, there is no meaningful association between the level of formal qualification (diploma versus degree) and the perceived ISC.

In terms of the ISP, those who possessed diplomas were found to have a mean score of M = 2.49 (SD = 0.70), whereas those who had degrees showed a mean score of M = 2.52 (SD = 0.66). It is clear from Levene's test that there were equal variances for these two groups, F(1, 422) = 0.73, p = .393. An independent t-test results found a mean difference of –0.02 with an insignificant result, t(422) = –0.38, p = .706, where the 95% confidence interval is [–0.15, 0.10]. The effect size in this case is trivial (Cohen's d ≈ –0.04). As per ISPr, diploma-holders had a mean of M = 2.52 (SD = 0.68) while degree-holder teachers scored M = 2.48 (SD = 0.61). With equality of variances, Levene's test was non-significant, F(1, 422) = 2.26, p = .133. There was no significant statistical difference between diploma-holders and degree-holders, as per the t-test for independent samples, t(422) = 0.61, p = .544, and their mean difference was found to be 0.04, with a 95% CI ranging from [–0.09, 0.16]. Effect size was found to be trivial (Cohen's d ≈ 0.06).

Generally, the independent t-test results indicate that there are no statistically significant differences in teachers' perceptions of ISC, ISP, and ISPr based on educational qualification among those serving in Addis Ababa's public primary schools. Perceptions of school inclusivity appear to be largely similar across qualification levels in the sampled primary schools, suggesting that day-to-day engagement with SWDs, school routines, and shared institutional constraints may shape teachers' evaluations more uniformly than formal entry-level credentials alone.

c) Teachers' Perceptions of School Inclusivity Based on Age

One-way ANOVAs results indicated in Table 4.7, there were no statistically significant age-related mean score differences on ISC ($F(3, 420) = 0.28$, $p = .837$, $\eta^2 \approx .00$.), ISP ($F(3, 420) = 1.52$, $p = .208$, $\eta^2 \approx .01$), and ISPr ($F(3, 420) = 0.23$, $p = .876$, $\eta^2 \approx .00$). The ANOVA showed no significant effect of age on inclusion of SWDs in the sampled schools.

Table 4.7.

One-way ANOVA for teachers' perceptions of ISC, ISP, ISPr by age category (n = 424)

Dimension	Source	Sum of Squares	*df*	Mean Square	*F*	*p*	η^2
ISC	Between groups	0.32	3	0.11	0.28	.837	.00
	Within groups	155.23	420	0.37			
	Total	155.55	423				
ISP	Between groups	2.09	3	0.70	1.52	.208	.01
	Within groups	191.73	420	0.46			
	Total	193.82	423				
ISPr	Between groups	0.29	3	0.10	0.23	.876	.00
	Within groups	174.81	420	0.42			
	Total	175.10	423				

Note. η^2 = sum of squares between groups/total sum of squares; values specify minor effect sizes.

Because none of the omnibus tests reached statistical significance, the Scheffé post hoc comparisons did not reveal any meaningful pairwise differences among the age categories for ISC, ISP, or ISPr (all p values > .05). Overall, these findings indicate that younger, mid-career, and older teachers in the sampled schools hold broadly similar perceptions of ISC, ISP, and ISPr for SWDs despite differences in length of service or generational entry into the teaching profession. In the context of sampled primary schools, where teachers across age groups operate under the

same school leadership structures, district-level guidance, and resource constraints, perceptions of inclusion appear not to vary systematically by age category.

d) Teachers' Perceptions of School Inclusivity Based on Total Teaching Experience

The one-way ANOVAs were conducted to assess whether mean scores on ISC, ISP, and ISPr differed significantly across teachers' total years of teaching experience categories in school contexts where teachers operate under shared district guidance and comparable school conditions.

Table 4.8.

One-way ANOVA for teachers' perceptions of ISC, ISP,& ISPr by teaching experience (n = 424)

Dimension	Source	Sum of Squares	*df*	Mean Square	*F*	*p*	η^2
ISC	Between groups	7.95	3	2.65	7.54	< .001	.05
	Within groups	147.60	420	0.35			
	Total	155.55	423				
ISP	Between groups	5.87	3	1.96	4.37	.005	.03
	Within groups	187.95	420	0.45			
	Total	193.82	423				
ISPr	Between groups	19.69	3	6.56	17.74	< .001	.11
	Within groups	155.40	420	0.37			
	Total	175.10	423				

Note. η^2 = sum of squares between groups / total sum of squares.

As shown in Table 4.8, there were statistically significant effects of total teaching experience on all three dimensions of inclusion. For ISC, the ANOVA indicated a significant difference among experience groups, $F(3, 420) = 7.54$, $p < .001$, $\eta^2 = .05$, representing a small-to-moderate effect. Scheffé post hoc comparisons showed that teachers with up to 5 years of experience reported significantly lower perceptions of ISC than those with 11–15 years (MD = –0.44, $p < .001$) and 16 or more years of experience (MD = –0.30, $p = .011$).

For ISP, the ANOVA also yielded a significant effect of total teaching experience, $F(3, 420) = 4.37$, $p = .005$, $\eta^2 = .03$. Scheffé post hoc tests indicated that teachers with up to 5 years of experience reported significantly lower perceptions of ISP than those with 11–15 years of experience (mean difference = –0.37, $p = .007$), while differences between other groups were not statistically significant. The strongest effect of teaching experience emerged for ISPr. The

ANOVA indicated a statistically significant difference among experience groups, $F(3, 420) = 17.74$, $p < .001$, $\eta^2 = .11$. Scheffé comparisons showed that teachers with up to 5 years of experience reported significantly lower perceptions of ISPr than those with 6–10 years (MD = –0.34, p = .008), 11–15 years (mean difference = –0.69, p < .001), and 16 or more years (mean difference = –0.37, p = .001). Additional significant differences were observed between the 6–10 and 11–15 year groups (mean difference = –0.35, p = .001), and between the 11–15 and 16+ year groups (MD = 0.32, p = .001).

At large, these findings designate that total teaching experience is meaningfully associated with how primary school teachers in Addis Ababa evaluate the ISC, ISP, and ISPr for SWDs. Teachers in their first five years—who are typically navigating large classes and established school routines while still consolidating professional identity—report less favorable perceptions than colleagues with longer service. The largest differences emerge in ISPr, suggesting that sustained exposure to everyday classroom decision-making and school-level expectations may shape how teachers interpret and report inclusive practices in these public-school settings.

e) Teachers' Perceptions of School Inclusivity Based on Experience of Teaching SWDs

One-way ANOVAs were conducted to examine whether teachers' perceptions of the three dimensions of inclusion—ISC, ISP, and ISPr—differed significantly according to their specific experience teaching SWDs within Addis Ababa government primary schools. Teachers were categorized into four groups based on their experience with SWDs: never, up to 5 years, 6–10 years, and 11 or more years.

As shown in Table 4.9, there were statistically significant differences across experience groups for all three dimensions. For ISC, the ANOVA revealed a significant effect of experience in teaching SWDs, $F(3, 420) = 36.33$, $p < .001$, $\eta^2 = .21$. Scheffé post hoc tests showed that teachers who had never taught SWDs reported significantly lower perceptions of ISC than those with up to 5 years (MD = –0.20, p = .020), 6–10 years (MD = –0.40, p < .001), and 11 or more years (MD = –0.86, p < .001). Additional significant differences were observed between teachers with up to 5 years and those with 11 or more years (MD = –0.66, p < .001), and between 6–10 years and 11 or more years (MD = –0.46, p < .001), indicating a progressive pattern across experience categories.

Table 4.9.

One-way ANOVA for teachers' perceptions of ISC, ISP, ISPr by specific experience in teaching SWDs (n = 424)

Dimension	Source	Sum of Squares	*df*	Mean Square	*F*	*p*	η^2
ISC	Between groups	32.05	3	10.68	36.33	< .001	.21
	Within groups	123.50	420	0.29			
	Total	155.55	423				
ISP	Between groups	41.47	3	13.82	38.11	< .001	.21
	Within groups	152.35	420	0.36			
	Total	193.82	423				
ISPr	Between groups	87.00	3	29.00	138.27	< .001	.50
	Within groups	88.09	420	0.21			
	Total	175.10	423				

Note. η^2 = sum of squares between groups / total sum of squares.

For ISP, a similarly significant effect emerged, $F(3, 420) = 38.11$, $p < .001$, $\eta^2 = .21$. Scheffé comparisons indicated that teachers who had never taught SWDs did not differ significantly from those with up to 5 years of experience (MD = –0.10, p = .616), but both groups reported significantly lower ISP scores than teachers with 6–10 years (MD = –0.50, p < .001, and –0.41, p < .001, respectively) and 11 or more years of experience (MD = –0.91, p < .001, and –0.81, p < .001, respectively). Teachers with 6–10 years of experience also reported significantly lower ISP scores than those with 11 or more years (mean difference = –0.40, p = .002). Within these public schools, teachers who have accumulated sustained engagement with SWDs appear to appraise school-level policy directives and their classroom translation more favorably than those with minimal or no direct exposure.

The biggest experience-related differences emerged for ISPr. The ANOVA indicated a statistically significant effect, $F(3, 420) = 138.27$, $p < .001$, $\eta^2 = .50$. Scheffé analyses showed that teachers who had never taught SWDs reported significantly lower perceptions of ISPr than those with 6–10 years (MD = –0.61, p < .001) and 11 or more years (MD = –1.37, p < .001). Teachers with up to 5 years of experience likewise reported significantly lower ISPr scores than those with 6–10 years (mean difference = –0.48, p < .001) and 11 or more years (MD = –1.24, p < .001). Among more experienced groups, teachers with 6–10 years reported significantly lower ISPr scores than those with 11 or more years (MD = –0.76, p < .001), while differences between those who had

never taught SWDs and those with up to 5 years were not significant (MD = –0.13, p = .132). These patterns suggest that repeated classroom-level interaction with SWDs in sampled schools is closely associated with how teachers evaluate everyday instructional and management practices.

Taken together, the findings indicate a strong and consistent gradient: greater specific experience teaching SWDs is associated with progressively more positive perceptions of inclusive school culture, policy, and especially school practices within the institutional and classroom contexts of these government primary schools. Teachers with 11 or more years of direct experience teaching SWDs consistently reported the highest levels of perceived inclusivity, whereas those with no or very limited experience reported the least favorable perceptions.

f) Teachers' Perceptions of School Inclusivity Based on the Degree of Students' Impairment

This subsection assessed whether teachers' perceptions of school inclusivity differ according to their perceived severity of the disabilities of the students they teach in government primary schools of Addis Ababa. The one-way ANOVAs were conducted to examine whether mean scores on ISC, ISP, and ISPr differed significantly across students' impairment severity categories within classroom contexts where teachers are directly responsible for adapting instruction and managing participation for SWDs.

Table 4.10

One-way ANOVA for teachers' perceptions of ISC, ISP, and ISPr by perceived severity of students' disabilities (n = 424)

Dimension	Source	Sum of Squares	*df*	Mean Square	*F*	*p*	η^2
ISC	Between groups	10.821	3	3.607	10.47	< .001	.07
	Within groups	144.728	420	0.345			
	Total	155.548	423				
ISP	Between groups	7.044	3	2.348	5.28	.001	.04
	Within groups	186.771	420	0.445			
	Total	193.815	423				
ISPr	Between groups	31.905	3	10.635	31.19	< .001	.18
	Within groups	143.191	420	0.341			
	Total	175.096	423				

Note. η^2 = sum of squares between groups / total sum of squares.

As shown in Table 4.10, there were statistically significant differences across perceived severity groups for all three dimensions. For ISC, the ANOVA indicated a significant effect of perceived severity, $F(3, 420) = 10.47$, $p < .001$, $\eta^2 = .07$. Scheffé post hoc tests showed that teachers who perceived their students' disabilities as severe/profound reported significantly lower ISC scores than those who perceived disabilities as mild, moderate, or were unable to assess severity (all $p < .05$). Teachers who perceived disabilities as moderate also reported significantly lower ISC scores than those who perceived them as mild. No significant differences were observed between the "unable to assess" and "mild" groups. Within these public schools, perceptions of school culture appear less favorable when teachers interpret students' needs as requiring more intensive instructional adjustment and support.

For ISP, the ANOVA also revealed a significant effect of perceived severity, $F(3, 420) = 5.28$, $p = .001$, $\eta^2 = .04$. Scheffé comparisons indicated that teachers who perceived disabilities as mild reported significantly higher ISP scores than those who perceived them as moderate or severe/profound (all $p < .05$), while differences involving the "unable to assess" group were not statistically significant. This pattern suggests that teachers' evaluations of how school policy guidelines are interpreted and enacted may become less favorable when they experience greater instructional and organizational demands related with moderate or severe/profound impairments.

The highest differences emerged for ISPr. The ANOVA indicated a highly significant effect of perceived severity, $F(3, 420) = 31.19$, $p < .001$, $\eta^2 = .18$. Scheffé analyses showed that teachers who perceived disabilities as severe/profound reported significantly lower ISPr scores than all other groups (all $p < .001$), and those perceiving disabilities as moderate also reported significantly lower ISPr scores than those in the mild or unable-to-assess groups (all $p < .001$). Differences between the "unable to assess" and "mild" groups were not significant. In Addis Ababa's government primary classrooms—where large class sizes and limited specialized support are common—teachers who perceive students' impairments as more severe report less favorable evaluations of everyday inclusive practices.

In general, these findings indicate that teachers' judgments about the severity of their students' disabilities are systematically associated with how they evaluate the inclusiveness of school culture, policy, and particularly classroom practices. Perceptions of inclusivity decline as

perceived severity increases from mild to moderate and severe/profound levels, with the most pronounced differences observed in teachers' reports of day-to-day instructional and classroom management practices (ISPr).

4.1.4. Structural Equation Modeling (SEM) Analysis

As detailed in Section 3.4.1, the adapted Index for Inclusion instrument does not originate from a psychometrically validated scale but from a reflective framework re-specified into Likert-type indicators to gauge the inclusion of SWDs in primary schools. Because the factorial structure of this adapted instrument could not be assumed a priori, EFA was first conducted using pilot data to empirically derive a stable latent configuration. The EFA yielded a differentiated six-factor solution across the domains of ISC, ISP, and ISPr, resulting in a refined 54-item instrument. This section advances this validation process by subjecting the EFA-derived structure to CFA using the main study's data (n=424). The purpose is not to discover new dimensions but to test whether the empirically identified six-factor configuration exhibits acceptable model fit, indicator reliability, and construct validity within the institutional conditions of the studied primary schools. This step is methodologically necessary to ensure that subsequent SEM modeling rests on a measurement framework that is statistically defensible, theoretically coherent, and contextually grounded.

4.1.4.1. Confirmatory Factor Analysis (Measurement Model Evaluation)

Within public primary schools in Addis Ababa, where inclusive education is formally mandated yet unevenly enacted, the measurement of teachers' perceptions cannot rely on assumed construct stability. The adapted tools from the *Index for Inclusion* were reformulated into Likert-type indicators to capture perceptions of ISC, ISP, and ISPr for SWDs. Because this reformulation involved contextual translation from a reflective framework into measurable constructs, CFA was required to test whether the empirically derived structure identified through EFA (using pilot data) remained statistically tenable in the main study sample. In this institutional setting, where policy frameworks endorsement often exceeds implementation capacity, CFA functions not as a discovery tool but as a structured test of whether the hypothesized latent configuration is supported by teachers' patterned responses.

Guided by the conceptual architecture of the Index for Inclusion and refined through EFA, the measurement model was specified as hierarchical. Three second-order constructs (ISC, ISP, & ISPr) were posited to account for six interrelated first-order constructs: BC and EIV under ISC; PAI and OS under ISP; and TL and RP under ISPr. This hierarchical specification reflects the multidimensional character of inclusion for SWDs in schools, where cultural dispositions, policy orientations, and instructional practices operate as analytically distinct yet structurally intertwined domains. The higher-order modeling is theoretically justified because inclusive schooling is not reducible to isolated practices but emerges through the interaction of belief systems, institutional arrangements, and school or classroom-level enactments.

The full model comprised 54 observed indicators loading onto the six first-order constructs and, subsequently, onto the three higher-order constructs. ISC was represented by BC (9 indicators) and EIV (9 indicators), yielding 18 observed variables. ISP comprised PAI (9 indicators) and OS for SWDs (8 indicators), totaling 17 observed variables. ISPr included TL (12 indicators) and RP (7 indicators), contributing 19 observed variables. Each first-order construct was specified as reflective, with observed indicators assumed to capture teachers' perceptions as manifestations of underlying latent dimensions shaped by school-level norms and operational constraints.

The CFA analysis was done in two consecutive stages in order to maintain theoretical coherence and analytical accuracy. The first stage was focused on the first-order model, which tested the adequacy of the 54 items in terms of factor loadings, reliability, and model fit at the 6-construct level. At this stage, the focus was on item-level validity within the primary schools of Addis Ababa, considering the possibility that class size and lack of expert intervention might affect the perception of inclusion-oriented items by teachers. The second stage was focused on the higher-order model, which sought to test whether the first-order validated constructs would load effectively on ISC, ISP, and ISPr.

Through this staged confirmatory procedure, the analysis assessed factor loadings, overall model fit indices, and construct validity before advancing to structural modeling. The validated measurement model thus serves as the empirical foundation for subsequent SEM analysis, where relationships among ISC, ISP, and ISPr are examined within the Addis Ababa government primary school system. While the instrument's structure remains contextually bounded and may not

transfer without recalibration to other educational settings, its validation within this sample renders the hierarchical model defensible for analyzing inclusion as operationalized in these schools.

4.1.4.2. First-Order Measurement Model Testing

4.1.4.2.1. Conceptual Specification of the First-Order Measurement Model

In Addis Ababa government primary schools, inclusive education is formally embedded in policy discourse yet unevenly enacted in schools and classroom practice, particularly for SWDs. Under such institutional conditions, validating the first-order structure of the adapted *Index for Inclusion* requires testing whether teachers' responses coherently reflect distinct but interrelated latent dimensions rather than diffuse endorsement of inclusion as a general ideal. Because the six-factor configuration (BC, EIV, PAI, OS, TL, RP) emerged from pilot EFA after contextual adaptation of the Index into 54 Likert-type indicators, the first-order CFA operates as a confirmatory test of that refined structure in the main study sample. This stage evaluates whether the foundational measurement architecture—upon which higher-order constructs (ISC, ISP, & ISPr) depend—is empirically defensible before advancing to hierarchical modeling.

Testing the first-order model first isolates the measurement properties of each sub-dimension without prematurely aggregating them into second-order constructs. Each observed indicator was specified as reflective of its respective latent construct, assuming that variations in teachers' responses to items concerning BC, EIV, PAI, OS, TL, and RP are driven by underlying perceptions shaped by school routines, leadership practices, and material constraints. This specification distinguishes conceptual modeling (how inclusion is theorized as multidimensional) from statistical estimation (how the covariance structure is evaluated in AMOS).

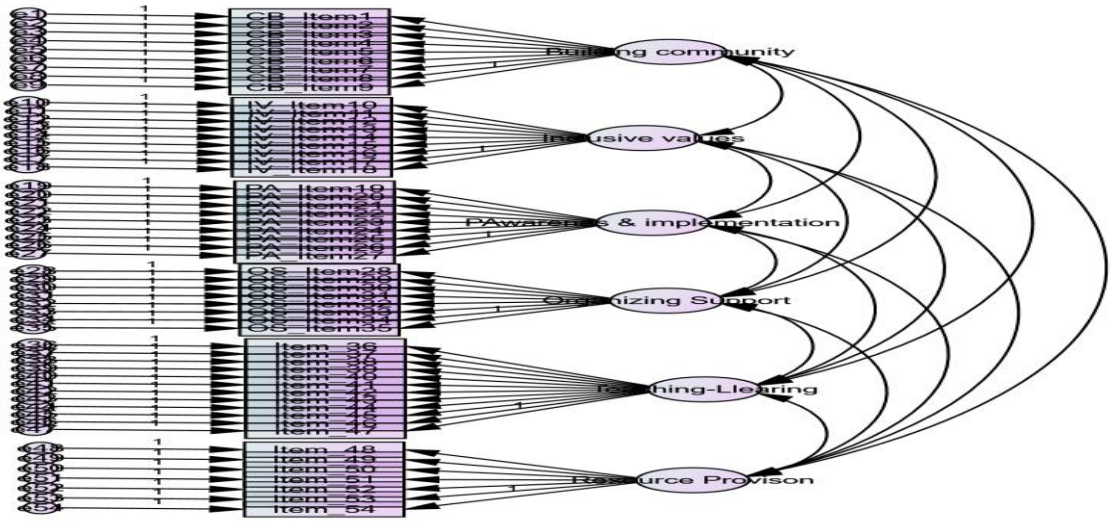

Figure 4.1a. Hypothesized First-Order CFA model.

4.1.4.2.2. Assessment of the First-Order Measurement Model

Figure 4.1a illustrates the hypothesized structure of the first-order measurement model that included 54 observed variables loading onto 6 latent variables covering the ISC, ISP, and ISPr. CFA was performed using AMOS version 23, with maximum likelihood (ML) estimation. Specifically, the test evaluated (a) the size and significance of factor loadings, (b) covariances between the 6 first-order factors, and (c) the fit indices of the model as a whole. In other words, the analysis aimed to check if the EFA-based framework still held statistical validity in application to the entire sample of teachers working in the sampled school context. Preliminary findings revealed that the loadings of all 54 indicators on their respective factors were significant at the level of $p < .001$. 2 out of 54 indicators had standardized loadings lower than .50, while others were higher than .70. This means that the vast majority of indicators had adequate discriminant validity in relation to their factors under current school conditions. The inter-construct covariances did not exceed .62, meaning that the included constructs were related but non-redundant.

Nevertheless, despite satisfactory loading values, certain indices of global fit suggested that re-specification of the proposed configuration would be necessary (CMIN/DF = 3.827; GFI = .928; AGFI = .921). Given that one of the aims of the study involved establishing a reliable basis for further analysis through SEM, the process of model re-specification was carried out very carefully.

According to the guidelines for model improvement involving modification indices, standardized residuals, and theoretical validity, 2 indicators within the sub-dimension of TL were successively deleted because of their low standardized loadings and high residual correlations. The deletions were carried out in a step-wise fashion, with the model being re-estimated at each stage. As a result, in the first-order model, 6 latent variables with a total number of 52 observed variables were identified. The amount of removed items constituted only a small fraction in relation to the threshold associated with posing a threat to the model's stability. Thus, the structure of the proposed model retained its coherence with the framework revealed using EFA.

Figure 4.1b presents the revised first-order model with standardized regression weights and estimated covariances among BC, EIV, PAI, OS, TL, and RP. Both unstandardized and standardized parameters were evaluated to ensure statistical significance and substantive interpretability. Standardized loadings were examined to assess the relative contribution of each indicator to its latent construct, while overall model fit indices were reviewed to determine whether the refined configuration more adequately reproduced the observed covariance matrix. The revised model revealed improved fit and stronger construct representation, thereby providing a statistically stable first-order measurement structure. Establishing this first-order integrity is methodologically necessary before specifying the higher-order model, as second-order constructs (ISC, ISP, ISPr) rely on the validity of their constituent sub-dimensions. While the measurement configuration remains contextually bounded to public primary schools in study area and may require recalibration in different educational systems, the refined first-order model provides a defensible empirical foundation for subsequent higher-order CFA and SEM.

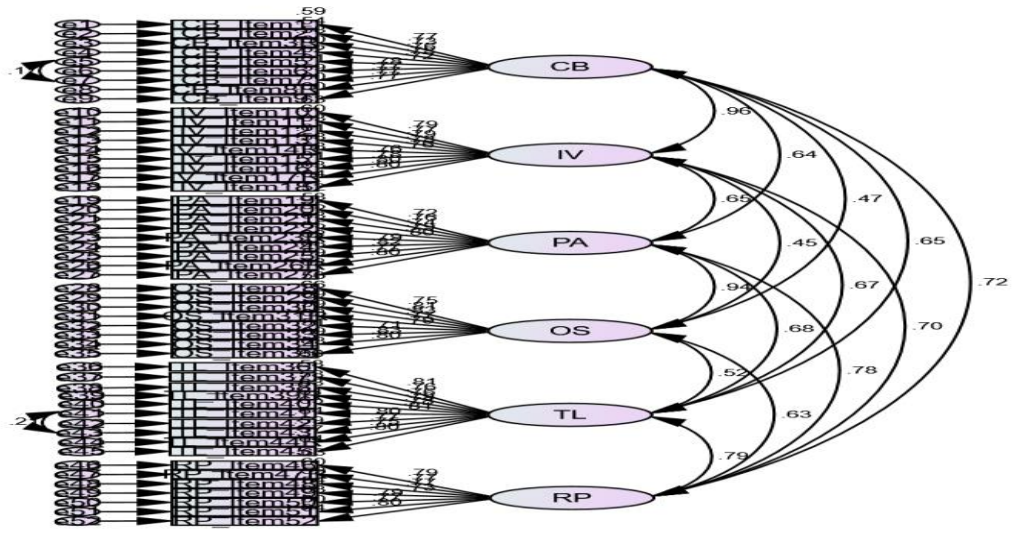

Figure 4.1b. Revised First-Order CFA Mode, Displaying Standardized Estimates.

A. Covariances among Fist-Order Constructs CFA Model

In Addis Ababa public primary schools—where inclusive education is institutionally endorsed yet variably enacted—the pattern of covariances among the 6 first-order constructs offers insight into whether ISC, ISP, and ISPr operate as an interconnected system or as fragmented domains. Because the adapted *Index for Inclusion* was translated into 54 measurable indicators and refined through EFA into BC, EIV, PA, OS, TL, and RP, examining latent covariances is not a procedural step but a confirmatory test of conceptual coherence. In CFA, covariances represent shared variance between constructs beyond measurement error, thereby indicating the degree of structural interdependence among theoretically related domains (Brown, 2015; Kline, 2016). Within this study, these parameters reveal how teachers' perceptions of inclusive schooling co-vary under the material and organizational conditions of the studied primary schools.

As shown in Appendix D (Table 4.11), all covariance estimates were positive and statistically significant ($p < .001$), with critical ratios ranging from 7.302 to 11.073. Such magnitudes indicate stable and systematic associations rather than random co-occurrence. The strongest covariances were observed between RP and TL (Estimate = .385), BC and EIV (Estimate = .351), and PAI and

OS (Estimate = .345). The association between BC and EIV reflects the internal coherence of inclusive culture, where shared community norms and articulated values mutually reinforce one another, consistent with the *Index for Inclusion's* conceptualization of culture as the normative foundation of inclusive schooling (Booth & Ainscow, 2011). Similarly, the PAI–OS covariance underscores the linkage between policy awareness and organizational arrangements, aligning with scholarship that situates policy enactment as embedded within school-level structural practices (Ainscow & Sandill, 2010).

The covariance between RP and TL (Estimate = .385) is particularly instructive within the sampled primary school context. In settings where resource constraints and large class sizes shape daily instructional decisions, perceptions of adequate RP appear tightly connected to perceptions of inclusive teaching–learning practices. This pattern supports arguments that inclusive pedagogy is materially mediated; policy aspirations translate into classroom adaptation only when organizational and resource conditions permit (Mitchell, 2014; Florian & Black-Hawkins, 2011). The empirical interdependence of RP with PAI (.327) and OS (.296) further suggests that resource allocation is not independent of policy interpretation or administrative coordination.

Moderate but consistent covariances among other construct pairs (e.g., BC–PAI, EIV–TL, EIV–OS) indicate that relational and normative dimensions of inclusion are empirically intertwined with structural and instructional dimensions. This reinforces theoretical accounts that conceptualize inclusive schooling as a mutually reinforcing ecosystem rather than as discrete institutional compartments (Slee, 2018; Ainscow & Sandill, 2010). Importantly, none of the covariances approach levels suggestive of multicollinearity or construct redundancy. The constructs are related, yet sufficiently differentiated to warrant separate modeling at the first-order level.

Collectively, the covariance matrix supports the proposition that BC, EIV, PA, OS, TL, and RP form a coherent but non-redundant network of relationships within government primary schools of Addis Ababa. This empirical pattern provides justification for specifying second-order constructs (ISC, ISP, ISPr), as higher-order modeling presupposes meaningful interrelationships among lower-order dimensions. While these relationships remain bounded by the specific administrative structures and resource conditions of the sampled schools and therefore should not be generalized without recalibration, the observed covariance structure renders the first-order

configuration theoretically aligned and methodologically defensible as a foundation for higher-order CFA and subsequent SEM analysis.

B. Factor Loadings and Indicator Reliability

In sampled primary schools, the adequacy of the first-order measurement model depends on whether individual indicators reliably capture the latent dimensions identified through contextual adaptation and pilot EFA. Because the adapted Index for Inclusion was translated into 54 Likert-type indicators and refined to 52 items in the revised lower-order CFA model, examining both unstandardized and standardized regression weights is necessary to establish that teachers' responses meaningfully operationalize BC, EIV, PAI, OS, TL, and RP before proceeding to higher-order modeling.

- **Unstandardized Regression Weights of the Revised First-Order CFA Measurement Model**

Unstandardized regression weights were examined to assess the magnitude and statistical significance of the relationships between each observed indicator and its corresponding latent construct. Using ML estimation in AMOS, one indicator per factor (BC_Item1, IV_Item10, PA_Item19, OS_Item28, TL_Item36, and RP_Item46) was fixed to 1.000 to define the metric of each latent variable, while the remaining 46 indicators were freely estimated. The resulting unstandardized estimates, standard errors, critical ratios (C.R.), and probability values are reported in Appendix D (Table 4.12). Across all six constructs—BC, EIV, PAI, OS, TL, and RP—every freely estimated loading was statistically significant at $p < .001$. Critical ratios substantially exceeded the conventional threshold of 1.96, indicating that each item contributes systematically to its designated latent construct rather than reflecting random variation (Brown, 2015; Kline, 2016). In practical terms, teachers' responses to items describing collaborative culture (BC), value orientation (EIV), policy engagement (PAI), organizational coordination (OS), classroom practice (TL), and material support (RP) are not weak or incidental indicators; they are statistically anchored to the constructs they were intended to measure.

The magnitude of the unstandardized loadings further indicates stable measurement across constructs. For example, BC indicators (BC_Item2–BC_Item9) ranged from .951 to 1.080, while EIV indicators (EIV_Item11–EIV_Item18) ranged from .885 to 1.037. Comparable strength was

observed for PAI (1.056–1.246), OS (1.047–1.254), TL (.874–1.009), and RP (.888–1.038). Although unstandardized coefficients are scale-dependent, their consistent statistical significance and substantive magnitude indicate that the latent constructs are well anchored in teachers' patterned responses within this institutional context. To address potential deviations from multivariate normality—plausible in survey data collected from heterogeneous school environments—a nonparametric bootstrap procedure (2000 resamples) was conducted following Nevitt and Hancock (2001). As expected, bootstrap estimation did not alter the ML parameter estimates but provided alternative standard errors and confidence intervals. Differences between ML-based and bootstrap-based standard errors were minimal and showed no systematic inflation or deflation. The continued statistical significance of all loadings under bootstrap estimation strengthens confidence that the parameter estimates are robust to moderate non-normality and not artifacts of distributional assumptions.

From what has been discussed so far, one may conclude that each indicator is significantly contributing to its corresponding first-order latent construct, and the modified low order construct can be considered relatively stable at the item level for further analysis.

- **Standardized Regression Weights of the Revised First-Order CFA Measurement Model**

Whereas unstandardized coefficients establish statistical significance and parameter stability, standardized regression weights (λ) provide a unit-free index of the strength of association between each indicator and its latent construct. Standardized loadings indicate the proportion of variance in an observed variable explained by the latent factor, with error variance equal to $1 - \lambda^2$ (Brown, 2015; Kline, 2016). In the context of primary schools in Addis Ababa, these coefficients reveal how strongly teachers' item responses align with the underlying dimensions of inclusive schooling. Methodological guidelines generally regard standardized loadings of .50 as minimally acceptable and .60 or higher as preferable for demonstrating convergent validity (Hair et al., 2010, 2014, 2019; Kline, 2016). As shown in Appendix D (Table 4.13), all standardized loadings in the revised first-order model exceeded .50, ranging from .714 to .834. The majority of indicators cluster within the .70–.83 interval, suggesting that each construct is measured with substantial shared variance and limited random error.

The loadings for indicators for BC were .722-.783, which means that the indicators measuring belongingness, collegiality, and community support for SWDs are uniformly influenced by the latent construct. The EIV indicators have loading scores of .759-.797, signifying that the teachers' perception of fairness and inclusiveness values are highly consistent with the EIV factor. The loadings for the PAI indicators (.722-.824) show that the PAI indicators are consistently measured, with some having loading scores above .80, which is an indication of their importance in the construct. The OS indicators (.714-.834) indicate a robust measurement of institutional arrangements for inclusive education. The TL indicators (.752-.813) indicate that the pedagogy of inclusion can be operationalized reasonably well despite the external constraints such as class sizes and workload, among others. RP loadings (.733–.800) ensure stable representation of perceived resource adequacy.

Importantly, reverse-coded items across constructs performed comparably to positively worded items, suggesting that acquiescence bias was mitigated without compromising construct integrity. The relatively narrow dispersion of loadings within each factor indicates balanced representation rather than domination by a small subset of exceptionally strong items. At the same time, loadings are not identical, indicating that indicators capture distinct facets of each construct rather than redundant duplications. From a psychometric perspective, this pattern supports convergent validity and item reliability, establishing that BC, EIV, PAI, OS, TL, and RP are internally coherent first-order constructs. Establishing this first-order integrity is methodologically necessary before specifying higher-order constructs (ISC, ISP, ISPr), as higher-order modeling presupposes stable measurement at the first-order level. While the magnitude of loadings reflects the specific administrative, cultural, and resource conditions of public primary schools in Addis Ababa and should not be presumed invariant across different educational systems without revalidation, the consistently strong and homogeneous standardized coefficients render the first-order measurement model empirically robust and defensible as the basis for subsequent higher-order CFA and SEM analyses. The full standardized loadings for all items are provided in Appendix D (Table 4.13).

C. Model Fit Evaluation

In public primary schools of Addis Ababa, the adequacy of a measurement model cannot be interpreted as a purely statistical exercise. It must be read against the conditions under which teachers construct their responses. Because the six-factor configuration (BC, EIV, PA, OS, TL,

RP) was checked and refined through pilot EFA following contextual adaptation of the Index for Inclusion (Booth & Ainscow, 2002, 2011), the CFA conducted on the main sample functions as a confirmatory test in the strict methodological sense: it evaluates whether the empirically examined structure is reproduced in a new dataset rather than generating alternative latent dimensions. Fit assessment, therefore, concerns the degree to which the hypothesized measurement architecture corresponds to the observed covariance structure of teachers' responses within this specific institutional environment. Consistent with established SEM guidance, model adequacy was evaluated using multiple classes of fit indices, such as absolute, incremental, and parsimony-adjusted, recognizing that reliance on a single statistic can distort conclusions about structural coherence (Arbuckle, 2012; Brown, 2015; Byrne, 2016; Hair et al., 2019; Kline, 2016; Schumacker & Lomax, 2016). The six first-order constructs were specified with their respective indicators, and global fit was assessed through converging evidence. Due to length constraints, a detailed summary of the Model Fit Indices for the Revised First-Order CFA Measurement Model is provided in Appendix D (Table 4.14)

Absolute and Approximate Fit: The chi-square statistic was statistically significant, $\chi^2(1257) = 1566.43$, $p < .001$. Given the sample size ($N = 424$), this result is expected, as χ^2 is highly sensitive to sample magnitude and minor deviations from multivariate normality (Byrne, 2016; Kline, 2016; Schumacker & Lomax, 2016). Interpretation, therefore, centers on complementary indices rather than on the unrealistic assumption of exact fit. The χ^2/df ratio of 1.25 falls well below commonly referenced upper limits of 2.00 or 3.00, indicating that discrepancies between the model-implied and observed covariance matrices are minimal relative to model complexity (Brown, 2015; Kline, 2016). The RMSEA value (.024; 90% CI [.020, .028]) indicates close approximation to the population covariance structure. The upper bound of the confidence interval remains below .05, and PCLOSE = 1.000 fails to reject the null hypothesis of close fit (Browne & Cudeck, 1993; Hu & Bentler, 1999). In a context where teachers' experiences of inclusion are shaped by institutional pressures and policy–practice gaps, such a low RMSEA suggests that the six-factor structure captures systematic patterns in the data rather than idiosyncratic variation. The SRMR value (.026) further indicates minimal residual discrepancy between observed and predicted correlations.

Incremental (Comparative) Fit: Incremental indices compare the specified model with an independence model in which all indicators are assumed uncorrelated. For the revised first-order

measurement model, NFI = .912 and RFI = .907 exceed the .90 threshold typically interpreted as acceptable. More substantively, IFI = .981, TLI = .980, and CFI = .981 surpass the .95 benchmark associated with strong comparative fit (Hu and Bentler, 1999; Byrne, 2016; Kline, 2016). These values indicate that the latent structure accounts for a substantial proportion of the shared variance among indicators beyond what would occur if teachers' responses were structurally diffuse. Given that inclusive education in Ethiopia is theoretically framed as multidimensional—integrating relational culture, policy awareness, organizational structures, pedagogical practice, and RP—the strong comparative indices support the interpretation that teachers' perceptions are organized along coherent structural dimensions rather than reflecting undifferentiated attitudinal tendencies.

Parsimony-Adjusted Fit: Because complex models can achieve a favorable fit by increasing parameterization, parsimony-adjusted indices were examined to evaluate efficiency (Hair et al., 2019; Hooper, Coughlan, & Mullen, 2008; Kline, 2016). PRATIO = .948 indicates efficient utilization of degrees of freedom. PNFI = .864 and PCFI = .930 exceed the commonly cited .60 benchmark, suggesting that model adequacy is not achieved at the expense of unnecessary complexity. This is particularly relevant given that modeling six interrelated first-order constructs inevitably increases structural density. The parsimony-adjusted results indicate that good fit reflects substantive covariance organization rather than mechanical overfitting.

Information Criteria and Expected Cross-Validation: Information criteria provide additional evidence regarding the balance between fit and complexity. The AIC value (1912.43) is substantially lower than that of the saturated model (2860.00) and the independence model (17960.44), indicating superior efficiency (Brown, 2015; Hair et al., 2019). The BIC (1961.993), which more strongly penalizes model complexity, similarly favors the hypothesized structure. The ECVI value (4.52; 90% CI [4.29, 4.77]) is markedly lower than the corresponding values for the saturated (6.76) and independence (42.46) models. Lower ECVI values indicate stronger expected cross-validation performance in comparable samples (Brown, 2015; Byrne, 2016). This suggests that the model is unlikely to be narrowly sample-specific and may replicate in similar populations of teachers operating under comparable institutional conditions.

Sample Adequacy and Model Stability: Hoelter's critical N values were examined as a supplementary indicator of sample adequacy and model stability (Byrne, 2016; Kline, 2016). The

Hoelter index at the .05 significance level was 363, and at the .01 level was 372. Both values exceed the commonly cited minimum threshold of 200 for adequate sample size and surpass the more conservative criterion of 300 associated with strong parameter stability. Given that the actual sample size was N = 424, these results indicate that the measurement model is well supported by the data and that the parameter estimates are unlikely to be largely distorted by sampling error.

In general, the low χ^2/df ratio, RMSEA, and SRMR values, strong incremental indices (IFI, TLI, CFI), satisfactory parsimony measures (PNFI, PCFI), favorable information criteria (AIC, BIC, ECVI), and robust Hoelter statistics converge to indicate that the revised first-order CFA model provides a close and efficient representation of the observed covariance structure. These fit statistics reflect structural correspondence between the hypothesized model and teachers' response patterns; they do not imply uniform realization of inclusive practices across Addis Ababa schools. Because higher-order modeling presupposes stable first-order measurement, establishing this level of global fit is methodologically necessary before specifying ISC, ISP, and ISPr as second-order constructs. While model fit may partially reflect contextual features specific to the Addis Ababa policy and institutional environment and should not be presumed invariant across settings without revalidation, the convergence of multiple indices renders the first-order measurement structure empirically coherent and defensible as the basis for higher-order CFA and later SEM analyses.

D. Reliability and Validity Test Report

Before proceeding to the structural analysis, the reliability and validity of the proposed measurement model were rigorously examined to ensure that the latent constructs were measured with sufficient precision and theoretical coherence. Establishing the psychometric soundness of the measurement instrument is a critical prerequisite for the valid interpretation of causal relations and structural pathways in SEM (Hair et al., 2014; Kline, 2016). This process enhances confidence that the observed scores accurately reflect the underlying constructs rather than measurement error or methodological artefacts (Byrne, 2016; DeVellis, 2017). Accordingly, the present section evaluates the reliability and construct validity of the six first-order latent constructs representing teachers' perceptions of inclusive school culture, policy, and practices for SWDs before advancing to higher-order and structural modeling.

- **Reliability Assessment**

Reliability assessment constitutes the first step in establishing the adequacy of the measurement model. Before drawing any substantive conclusions about the relationships among ISC, ISP, and ISPr, it was essential to ensure that the underlying scales measured these constructs in a consistent and dependable manner. In the context of this dissertation, reliability is understood as the extent to which the instrument yields stable and internally coherent scores that can be trusted to reflect teachers' perceptions of inclusivity for SWDs, rather than random error or methodological artefacts (Byrne, 2016; DeVellis, 2017; Kline, 2016). Internal consistency reliability examines whether the items grouped under a given scale operate together as a unified set, reflecting the same latent dimension (Ho, 2006; Tavakol & Dennick, 2011). If items within a subscale are highly heterogeneous or poorly aligned with the construct definition, this will typically be reflected in weak inter-item correlations and low reliability coefficients, signaling the need for revision or item removal (Cortina, 1993). For this reason, internal consistency was assessed after completion of the first-order CFA refinement process, when any poorly performing items had already been removed, ensuring that reliability coefficients are based on the final, empirically supported item set.

Among the measures that may be utilized to assess internal consistency, Cronbach's alpha (α) can be considered the most popular index for use in educational research, while also being an indicator against which other scales' reliabilities could be judged (Field, 2013). Although it has several disadvantages, such as sensitivity to the number of items and to tau-equivalence, α may help determine whether items of a particular scale have sufficient consistency. In line with the suggestions by authors, a Cronbach's alpha of .70 and above was accepted as the minimum acceptable reliability level, with values above .80 and .90 representing acceptable and excellent levels, respectively (Field, 2013; Hair et al., 2014; Kline, 2016; Pallant, 2016).

As presented in Appendix D (Table 4.15), the Cronbach's alpha values for each of the six first-order constructs and their corresponding second-order aggregated constructs in the revised lower-order CFA model. The first-order constructs comprise two subscales under the second-order construct ISC—BC and IV; two subscales under ISP—PAI and OS; and two subscales under ISPr—TL and RP practices. The table also shows the original number of items, any items deleted during CFA, and the number of items retained in the refined model.

As shown in Appendix D (Table 4.15), all first-order subscales verified very high internal consistency. Cronbach's alpha values ranged from 0.908 (BC) to 0.942 (PAI), comfortably exceeding the .70 minimum threshold and falling within what DeVellis (2017) would describe as excellent reliability for research purposes. This specifies that items within each subscale (whether they refer to BC, EIV, API, or OS, TL, or RP) are highly interrelated and consistently reflect their underlying latent dimension. The second-order aggregates showed similarly strong reliability. The composite scales for ISC, ISP, and ISPr yielded Cronbach's alpha values of 0.943, 0.940, and 0.953, respectively. These results indicate that the aggregation of first-order constructs into higher-order constructs does not dilute internal coherence but instead reflects theoretically integrated constructs measured with high stability.

Overall, this body of information clearly indicates the reliability and psychometric soundness of the measurement scale in question at first- and second-order levels. In addition to the above, CR estimates of all variables were found to be greater than the suggested level of .70, which again supports the conclusion regarding the reliability of the measurement model (as discussed earlier).

- **Validity of the scales**

While reliability confirms internal consistency, validity defines whether the constructs actually measure what they are theoretically intended to signify. In SEM, establishing measurement validity is essential because structural interpretations depend completely on the adequacy of the latent variable model (Hair et al., 2019; Kline, 2016). Reliability is essential but not adequate: a scale may exhibit high internal consistency yet fail to capture the intended construct (Bollen, 1989; DeVellis, 2017). Therefore, this study assumed a full assessment of construct validity, aiming on both convergent and discriminant validity. Convergent validity inspects whether items of a construct share considerable common variance, whereas discriminant validity assesses whether conceptually distinct constructs continue to be empirically distinguishable. As a whole, these processes certify that the measurement model achieves both internal coherence and conceptual distinctiveness before structural testing.

Within this framework, 6 first-order constructs underpinning teachers' perceptions of ISC, ISP, and ISPr for SWDs were assessed: BC, EIV, PAI, OS, TL, and RP. Construct validity was evaluated through (a) convergent validity and composite reliability, (b) inspection of the inter-

factor correlation matrix, and (c) discriminant validity using the Fornell–Larcker criterion. These results (Tables 4.15–4.17) provide evidence for retaining these constructs as robust indicators of the three inclusivity dimensions (C-P-P).

E. Convergent validity and Composite Reliability (CR)

Convergent validity evaluates the extent to which multiple indicators designed to measure the same construct converge and share substantial common variance (Fornell & Larcker, 1981). In CFA/SEM, convergent validity is assessed using three complementary indices: standardized factor loadings (λ), CR, and AVE (Brown, 2015; Hair et al., 2019; Kline, 2016). Standardized factor loadings reflect the strength of association between each observed item and its latent factor. Loadings above .50 are considered acceptable, with values above .70 preferred as strong evidence of indicator reliability (Hair et al., 2019; Kline, 2016). In this study, all standardized loadings exceeded .70, indicating that each item captured substantial variance in its respective construct.

Table 4.16

Construct Validity and CR Measures of *the Revised Lower-Order CFA Model*

Constructs	No. of items	Standardized loading range	CR	AVE
BC	9	.722–.783	.581	.926
EIV	9	.759–.797	.611	.934
PAI	9	.722–.824	.605	.932
OS	8	.714–.834	.621	.929
TL	10	.752–.813	.614	.941
RP	7	.733–.800	.603	.914

Note. CR = Construct Reliability; AVE = Average Variance Extracted. AVE values were computed as the mean of the squared standardized loadings for each construct. CR values were calculated using the formula $CR = \frac{(\sum \lambda^2)}{(\sum \lambda)2 + \sum(1-\lambda^2)}$, where λ denotes standardized factor loadings. All factor loadings used in these computations were statistically significant at $p < .001$.

CR provides a more precise index of internal consistency in SEM than Cronbach's alpha because it incorporates standardized loadings and measurement error variances. CR values of .70 or higher indicate adequate reliability, with values above .80–.90 reflecting very strong consistency (Hair et

al., 2019). As reported in Table 4.16, CR values ranged from .914 to .941, well above recommended thresholds. AVE represents the average proportion of variance explained by a latent construct in its indicators. An AVE of .50 or higher indicates that the construct explains at least half of the variance in its indicators (Fornell & Larcker, 1981). As shown in Table 4.6, AVE values ranged from .581 to .621, confirming satisfactory convergent validity.

Taken together, the high standardized loadings, CR values exceeding .90, and AVE values above .50 provide coherent evidence of convergent validity and internal consistency for all six first-order constructs. These findings confirm that the measurement model demonstrates both statistical adequacy and theoretical coherence, thereby warranting subsequent assessment of discriminant validity and higher-order modeling.

F. Discriminant Validity Assessment for First-Order Constructs

- **Factor Correlation Matrix for First-Order Constructs**

To further evaluate the discriminant aspect of construct validity for teachers' perceptions of inclusivity for SWDs, the inter-factor correlations among the six first-order latent constructs were examined. In a CFA/SEM framework, factor correlations represent the shared variance between latent variables after accounting for measurement error and therefore indicate the degree of conceptual relatedness among constructs (Brown, 2015; Kline, 2016). Correlations that are clearly below .85 are typically interpreted as evidence that the constructs are empirically distinguishable rather than redundant (Brown, 2015; Kline, 2016).

The six first-order constructs represented distinct but related dimensions of inclusive schooling: BC, EIV, PAI, OS, TL, and RP. Table 4.17 presents the factor correlation matrix for the revised lower-order CFA model. All correlations were positive and statistically significant (all $p < .001$), consistent with the theoretical expectation that a more inclusive community, values, policies, organizational support, teaching–learning, and resource provision tend to co-occur in schools that are more inclusive of SWDs.

Table 4.17

Factor Correlation Matrix for First-Order Constructs in the Revised Lower-Order CFA Model

Construct	BC	EIV	PAI	OS	TL	RP
BC	1.000	.351	.200	.164	.238	.290
EIV	.351	1.000	.246	.193	.298	.342
PAI	.200	.246	1.000	.345	.258	.327
OS	.164	.193	.345	1.000	.219	.296
TL	.238	.298	.258	.219	1.000	.385
RP	.290	.342	.327	.296	.385	1.000

Note. Values represent standardized correlations among the six first-order latent constructs. All correlations are statistically significant at $p < .001$.

At the same time, the correlations were low to moderate in magnitude, ranging from 0.164 to 0.385, and all were well below the 0.85 threshold. The strongest associations were observed between TL and RP ($r = 0.385$), between BC and EIV ($r = 0.351$), and between PAI and OS ($r = 0.345$). This pattern is conceptually coherent: inclusive TL tend to be closely linked with adequate RP practices, a strong sense of community aligns with shared inclusive values, and PAI is tightly connected to how support for inclusion is organized at school level. Overall, the matrix suggests a coherent but multidimensional system of inclusivity, whereby the constructs are theoretically interconnected but statistically non-redundant. The low to moderate correlations in Table 4.7, in combination with the strong factor loadings and reliability indices reported earlier, provide initial but not sufficient evidence that the six first-order constructs are related but not redundant. This pattern motivated a more formal assessment of discriminant validity.

G. Discriminant Validity of First-Order Constructs (AVE vs. Squared Correlations)

Discriminant validity refers to the extent to which a latent construct is empirically distinct from other constructs within the measurement model. It ensures that each construct captures a unique dimension of the underlying theoretical framework and does not merely replicate variance explained by related constructs (Brown, 2015; Finch et al., 2016). A model with adequate discriminant validity demonstrates that indicators load more strongly on their intended latent factor than on any other factor and that correlations among latent constructs do not suggest conceptual redundancy.

In this study, discriminant validity for teachers' perceptions of inclusivity for SWDs was evaluated using the Fornell–Larcker criterion, implemented through a comparison of AVE with squared inter-construct correlations (Fornell & Larcker, 1981; Hair et al., 2019). According to this criterion, discriminant validity is supported when, for each latent variable, its AVE exceeds the squared correlation (r^2) between that construct and any other construct. Conceptually, this indicates that a construct explains more variance in its own indicators than it shares with any other latent variable. Equivalently, the square root of AVE for each construct should be greater than its correlations with all other constructs.

Table 4.18

Discriminant Validity Matrix for First-Order Constructs (AVE vs. Squared Correlations)

Construct	BC	EIV	PAI	OS	TL	RP
BC	0.581	0.123	0.040	0.027	0.057	0.084
EIV	0.123	0.611	0.061	0.037	0.089	0.117
PAI	0.040	0.061	0.605	0.119	0.067	0.107
OS	0.027	0.037	0.119	0.621	0.048	0.088
TL	0.057	0.089	0.067	0.048	0.614	0.148
RP	0.084	0.117	0.107	0.088	0.148	0.603

Note. Diagonals (in bold) represent AVEs for each construct, whereas off-diagonal elements are squared standardized correlations (r2) between constructs, which were calculated based on the factor correlation matrix presented in Table 4.18. Discriminant validity exists when the AVE for each construct is higher than any r2 in the same row or column (Fornell & Larcker, 1981).

As shown in Table 4.18, the AVE values for the 6 latent variables range from 0.581 to 0.621, while the squared correlations range from 0.027 to 0.148. The largest squared correlation is between TL and RP ($r^2 = 0.148$), reflecting their conceptual proximity as complementary facets of inclusive practice within the practice domain. Nevertheless, both TL (AVE = 0.614) and RP (AVE = 0.603) substantially exceed this value, thereby satisfying the Fornell–Larcker criterion with a clear margin. Moreover, for every construct, the AVE on the diagonal is larger than any r^2 value in its corresponding row and column. This pattern indicates that each construct explains more variance in its own indicators than it shares with any other construct in the model. In terms of the alternative Fornell–Larcker formulation, the square roots of the AVE values (approximately 0.762–0.788) exceed the corresponding factor correlations reported in Table 4.18 (0.164–0.385), providing additional confirmation of satisfactory discriminant validity.

Contemporary SEM guidelines also recommend supplementing the Fornell–Larcker approach with additional procedures, such as inspection of cross-loadings and the Heterotrait–Monotrait (HTMT) ratio, which has been proposed as a sensitive test of discriminant validity (Henseler, Ringle, and Sarstedt, 2015; Hair et al., 2019). HTMT values below 0.85 (strict criterion) or 0.90 (more liberal criterion) are generally considered acceptable. However, major SEM authorities (e.g., Byrne, 2016; Kline, 2016) do not treat HTMT or MSV indices as mandatory, and commonly used software such as AMOS does not compute these indices by default. Given the clearly satisfactory pattern of AVE versus r^2 and the low-to-moderate factor correlations well below 0.85, additional HTMT analysis was considered methodologically optional rather than necessary in the present study.

Taken together, the evidence from (a) strong and relatively homogeneous standardized factor loadings, (b) AVE values above 0.50, (c) high CR (reported earlier), (d) low-to-moderate factor correlations (0.164–0.385), and (e) AVE values that consistently exceed squared inter-construct correlations (0.027–0.148) provides robust support for both convergent and discriminant validity of the six first-order constructs. These results confirm that teachers' perceptions of BC, EIV, PAI, OS, TL, and RP represent empirically distinguishable yet theoretically integrated dimensions within the broader framework of inclusive education for SWDs in Addis Ababa primary schools. This robust psychometric foundation provides empirical justification for proceeding to the specification and estimation of the three second-order constructs (ISC, ISP, and ISPr) in the subsequent SEM analyses.

4.1.4.3. Higher-Order Measurement Model Testing

4.1.4.1.2.1. Specification of the Second-Order Measurement Model

A. **Conceptual Rationale for the Higher-Order Model**

Following the establishment of the reliability and validity of the first-order constructs, a higher-order CFA was undertaken to examine the broader latent architecture underlying the multidimensional framework of school inclusiveness as perceived by teachers in relation to SWDs. The decision to estimate a higher-order model was both theoretically reasoned and empirically warranted. The revised first-order CFA model (Figure 4.1b) revealed substantial correlations among the six latent constructs (BC, EIV, PAI, OS, TL, and RP), indicating that these sub-dimensions were not functioning as fully independent factors. Rather, their interrelationships

suggested a patterned clustering of conceptually related domains. In line with established SEM guidance, such a pattern justifies the specification of higher-order factors, as second-order modeling offers a more parsimonious, theoretically integrated, and psychometrically robust representation of complex multidimensional constructs (Brown, 2015; Marsh & Hocevar, 1985).

Thus, the higher-order specification was adopted to test whether the observed co-variation among the six first-order constructs could be explained by a smaller number of theoretically meaningful higher-order dimensions. Drawing on established theoretical frameworks in inclusive education, the six validated first-order constructs were reorganized into three coherent and theoretically grounded second-order factors.

B. **Structural Configuration of the Higher-Order Model**

The first higher-order factor, ISC, comprised the BC and EIV dimensions, which collectively represent the relational climate, shared beliefs, and value systems that underpin an inclusive ethos. This conceptualization aligns with scholarship that emphasizes collaboration, solidarity, and the cultivation of shared values as the cultural foundation of inclusive school environments (Ainscow et al., 2006; Ainscow & Sandill, 2010). The second higher-order factor, ISP, integrates PAI with OS, reflecting the regulatory, administrative, and structural mechanisms that institutions employ to sustain inclusive schooling. This formulation is consistent with the Index for Inclusion and related frameworks that emphasize the centrality of policy clarity, structured support systems, and institutional commitment in maintaining inclusive educational reforms (Booth & Ainscow, 2011; Mitchell, 2014).

The third higher-order factor, ISPr, consisted of TL and RP, capturing the pedagogical and material enactments of inclusion within daily instructional processes. This interpretation draws directly from inclusive pedagogy scholarship, highlighting differentiation, equitable resource access, and the creation of supportive learning environments as the operational core of inclusive practice (Slee, 2018). The hypothesized higher-order structure, comprising ISC, ISP, and ISPr as second-order factors loading onto the six first-order constructs, which in turn are measured by 52 observed indicators, is presented in Figure 4.2a

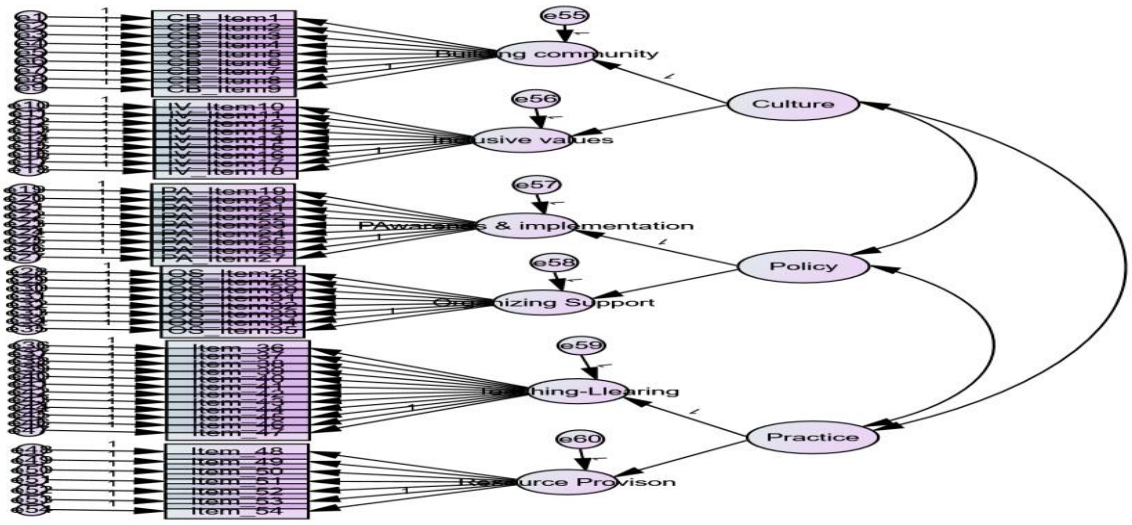

Figure 4.2a. Hypothesized Higher-Order Measurement Model of Inclusivity of School Culture, Policy, and Practices for SWDs.

The higher-order CFA was conducted using AMOS (version 23) with ML estimation. In contrast to the first-order CFA, which focused on indicator refinement and measurement adequacy, the higher-order analysis evaluated the hierarchical structural coherence among latent dimensions. The structural relationships between the six first-order latent factors—BC, EIV, PAI, OS, TL, and RP—and their corresponding second-order constructs (ISC, ISP, and ISPr) were estimated.

The results provided strong empirical support for the hypothesized hierarchical structure. All six first-order factors loaded significantly onto their respective second-order constructs, with standardized factor loadings exceeding .70 and unstandardized regression weights statistically significant at $p < .001$. These findings substantiate the theoretical assumption that the first-order sub-dimensions cohesively represent broader latent domains of inclusivity of school culture, policy, and practice. Furthermore, the model fit indices indicated excellent global fit and parsimony, confirming that the hierarchical structure adequately captured the multidimensional nature of teachers' perceptions of inclusion for SWDs. The validated higher-order measurement structure—illustrated in Figure 4.2b—presents the standardized factor loadings linking first-order to second-order constructs.

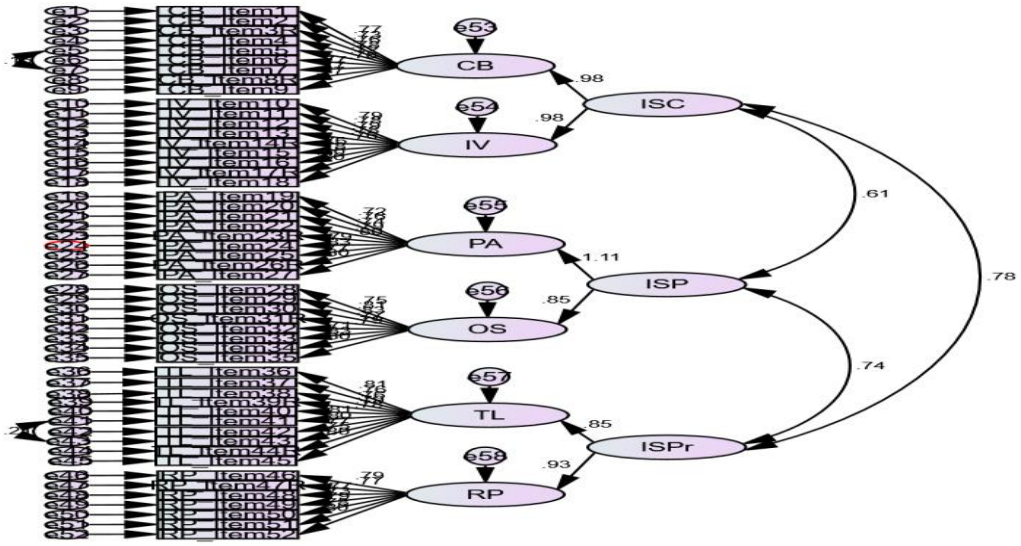

Figure 4.2b. Revised Higher-Order CFA Model of Inclusive School culture, policy and practices for SWDs.

As shown in Figure 4.2b, BC (λ = .978) and EIV (λ = .984) load very strongly onto ISC; PAI (λ = 1.107) and OS (λ = .851) load onto ISP; while RP (λ = .930) and TL (λ = .849) load onto ISPr. All standardized estimates exceed .60, reflecting strong hierarchical coherence of the higher-order measurement model. The standardized loading of PAI on ISP (λ = 1.107) exceeded 1.00, constituting a Heywood case—that is, an improper solution in which the estimated communality of an indicator exceeds 1.00 and its residual variance becomes negative (Kline, 2023; Kolenikov and Bollen, 2012). In substantive terms, this indicates an exceptionally strong association between PAI and ISP in this sample.

Methodological literature notes that such estimates may arise from sampling fluctuations, very strong factor relations, or high factor intercorrelations rather than substantive model misspecification (Bentler & Chou, 1987). Consistent with SEM best practice, this parameter was retained but interpreted cautiously and evaluated alongside global model fit and theoretical coherence. Given the excellent fit indices and absence of additional inadmissible parameters, the

higher-order model was maintained, and the Heywood case was acknowledged as both a limitation and an indication of the exceptionally strong integration of PAI within the ISP domain.

C. **Covariances of the Higher-Order CFA Measurement Model**

The higher-order CFA results revealed strong and statistically significant covariances among the three second-order latent constructs—ISC, ISP, and ISPr—providing further evidence of the systemic coherence of the inclusive education framework. In SEM, covariances among higher-order factors indicate the degree to which broader latent domains covary at the population level (Brown, 2015; Kline, 2023). Consistent with theoretical expectations, all covariance estimates were positive and statistically significant at $p < .001$, indicating that higher levels of inclusivity in one domain are systematically associated with higher levels in the others.

As shown in Appendix D (Table 4.19), the covariance between ISC and ISP (Estimate = 0.206, SE = 0.023, CR = 9.086, $p < .001$) indicates a reliable positive association between inclusivity of school culture and policy structures. The covariance between ISP and ISPr (Estimate = 0.263, SE = 0.028, CR = 9.549, $p < .001$) was the strongest, underscoring the central role of policy systems in shaping inclusive pedagogical practice. The covariance between ISPr and ISC (Estimate = 0.237, SE = 0.025, CR = 9.504, $p < .001$) was likewise positive and statistically significant.

Although these estimates reflect substantial shared variance, their magnitudes remain well within acceptable bounds and do not suggest multicollinearity or construct redundancy at the higher-order level. This indicates that ISC, ISP, and ISPr are meaningfully interrelated yet retain sufficient empirical distinctiveness to justify modeling them as separate higher-order dimensions. Taken together, the covariance structure reflects a theoretically coherent and empirically robust pattern in which inclusive culture, policy, and practice operate as interdependent yet analytically separable domains within a unified inclusive education framework. These findings reinforce the conceptualization of inclusive schooling as a whole-system phenomenon requiring alignment across relational climate, institutional structures, and classroom practice.

D. **Assessment of Model Fit for the Higher-Order CFA Measurement Model**

Assessing the adequacy of the higher-order CFA model is essential to determining whether the proposed hierarchical structure accurately represents the underlying theoretical dimensions of

school inclusiveness as perceived by teachers of SWDs. Before testing this hierarchical specification, the revised lower-order CFA measurement model was evaluated to establish that the first-order factor structure was empirically robust. As summarized in Table 4.13, the revised lower-order CFA model demonstrated adequate overall fit, providing evidence that the observed indicators adequately represented their intended first-order constructs.

Building on this foundation, the higher-order CFA model was then estimated to examine whether the intercorrelations among the first-order factors could be parsimoniously explained by three theoretically specified second-order constructs (ISC, ISP, & ISPr). In SEM, model fit indices indicate the degree to which the hypothesized model reproduces the observed covariance matrix and thus provide empirical justification for the specified measurement structure (Brown, 2015; Byrne, 2016; Kline, 2023). Following established SEM guidelines (Hair et al., 2019), this study evaluated the higher-order CFA model using multiple classes of indices—absolute fit, incremental (comparative) fit, parsimony-adjusted indices, error-of-approximation measures, and information-theoretic criteria—as shown in Appendix D (Table 4.20). This multidimensional assessment allows for a comprehensive evaluation of global fit, parsimony, and potential replicability.

The higher-order CFA represents a more parsimonious specification of the revised correlated first-order model because it explains the associations among the first-order factors through higher-order factor loadings rather than freely estimated inter-factor covariances (Brown, 2015; Byrne, 2016; Kline, 2023). Accordingly, the higher-order model introduces additional constraints and is therefore expected to exhibit fit that is broadly comparable to (and in some cases modestly weaker than) the correlated first-order solution, while offering stronger theoretical coherence and greater parsimony. In the present study, the higher-order model demonstrated fit that was comparable to the revised lower-order CFA (Appendix D (Table 4.13)) and remained within recommended thresholds across key indices (Appendix D (Table 4.20)), thereby supporting the hierarchical representation of teachers' perceptions of school inclusiveness for SWDs.

- **Bootstrapping and Model Robustness**

Bootstrapping procedures were used to strengthen the robustness of model estimation and the evaluation of overall fit. Specifically, a Bollen–Stine bootstrap with 2000 resamples was conducted to obtain a bootstrap-adjusted test of model fit (Bollen & Stine, 1992; Nevitt &

Hancock, 2001). The resulting Bollen–Stine p-value was 1.000, which can occur in complex CFA models—particularly those with many indicators and freely estimated parameters and in large samples. Importantly, inspection of the bootstrap replications indicated that the solution was stable, with no evidence of estimation problems (e.g., non-convergence or unstable parameter estimates). Overall, these results support the robustness of the revised higher-order measurement model under mild departures from normality and increase confidence in the substantive interpretation of the estimated parameters.

Absolute Fit Measures: The goodness-of-fit statistic for the higher-order factor model was $\chi^2(1263) = 1588.263$, $p < .001$ with a χ^2/df value of 1.258. While the χ^2 statistic was significant as is usually the case in complex models using relatively large samples, the value of χ^2/df was well within the acceptable range of < 2.0, thus reflecting excellent absolute fit (Byrne, 2016; Hair et al., 2019; Kline, 2023). The SRMR value (.024) was well below the threshold value of .08 recommended by Hu and Bentler (1999), implying that the model captures the observed correlation coefficients with very low residual discrepancy. The Hoelter critical N values for the model showed that Hoelter(.05) = 359, Hoelter(.01) = 369, were greater than 200 which represents a minimum criterion. The implication is that the current sample size is sufficient enough to support the proposed model (Hoelter, 1983).

Error of Approximation: The RMSEA for the higher-order model was .025, with a 90% confidence interval of [.021, .028] and a PCLOSE value of 1.000. These values fall well within the range indicative of close model fit (RMSEA < .05; Browne and Cudeck, 1993; MacCallum et al., 1996). The narrow confidence interval underscores the precision of the estimate, and the PCLOSE statistic indicates that the hypothesis of close fit cannot be rejected. Taken together, the RMSEA and SRMR provide strong evidence that the higher-order CFA model approximates the population covariance structure very closely.

Incremental (Comparative) Fit Indices: Incremental fit indices provided additional evidence to support the goodness-of-fit of the higher-order factor model. Specifically, the NFI of .911 and RFI of .906 were both above the recommended value of .90 for a good fit. Additionally, more demanding criteria—IFI of .980, TLI of .979, and CFI of .980—were all equal to or greater than the threshold of .95 that is considered indicative of excellent fit (Hu & Bentler, 1999; Kline, 2023).

This can be illustrated by the comparison with the independence (null) model that obtained the CFI, TLI, IFI, and NFI scores of .000.

Parsimony-Adjusted Fit Measures and Information Criteria: Parsimony-adjusted indices likewise favored the higher-order solution. The PNFI = .860 and PCFI = .934 were well above the recommended minimum of .60 (Mulaik et al., 1989; Hair et al., 2019), indicating that the model achieves a strong fit without unnecessary complexity. The PRATIO (.952) further suggests efficient use of available degrees of freedom. Information criteria also indicated a favorable balance between fit and parsimony. The AIC = 1922.263 and ECVI = 4.544 (90% CI [4.313, 4.795]) for the higher-order model were substantially lower than the corresponding values for the independence model (AIC = 17960.441; ECVI = 42.460) and lower than those for the saturated model (AIC = 2860.000; ECVI = 6.761). Because lower AIC and ECVI values indicate better expected performance in replication samples, these results suggest that the revised higher-order CFA model is both parsimonious and likely to generalize well.

In conclusion, the combined analysis of various fit measures, including absolute, incremental, adjusted for parsimony, approximative, and information-based criteria, reveals that the improved high-order CFA model exhibits superior fit to the data. The consistency in the results obtained using different fit measures increases the credibility of the appropriateness and reliability of the hierarchy of constructs used. The robustness of the results is further corroborated by the bootstrapping technique, which shows that the model based on ISC, ISP, and ISPr constructs is valid and can serve as the basis for further structural analysis.

4.1.4.2.2. Higher-Order Path Coefficients and Construct Validity

- **Unstandardized Regression Weights of the Higher-Order CFA Measurement Model**

The higher-order CFA was estimated in AMOS (version 23) using the ML procedure. In this model, 3 second-order latent constructs (ISC, ISP, and ISPr) were specified to underlie 6 first-order latent factors (BC, EIV, PA, OS, RP, & TL) representing teachers' perceptions of inclusivity for SWDs. Higher-order measurement models enable the organization of theoretically related first-order constructs under broader, superordinate latent dimensions, thus enhancing conceptual clarity and parsimony in the representation of complex constructs (Byrne, 2016; Kline, 2023; Marsh &

Hocevar, 1985). To achieve model identification, the unstandardized loading of one first-order factor on each second-order construct was fixed to 1.00 (BC for ISC, PAI for ISP, and TL for ISPr), in line with standard CFA practice (Brown, 2015; Kline, 2023). As reported in Appendix D (Table 4.21), all freely estimated unstandardized regression weights from the second-order factors to their respective first-order constructs were positive and statistically significant at $p < .001$.

Specifically, EIV loaded significantly on ISC (Estimate = 1.219, SE = 0.076, CR = 16.068, $p < .001$), indicating that, relative to the metric of the latent factor, a one-unit increase in ISC was associated with a 1.219-unit increase in EIV. Within the ISP dimension, PAI was fixed to 1.00 as the reference factor, and OS was significantly predicted by ISP (Estimate = 0.868, SE = 0.065, CR = 13.397, $p < .001$). For the ISPr construct, TL was fixed at 1.00 for identification, while RP demonstrated a strong and statistically significant association with ISPr (Estimate = 1.213, SE = 0.084, CR = 14.498, $p < .001$). Importantly, all unstandardized paths were large in magnitude and statistically robust, indicating that each first-order construct contributes substantively to its respective higher-order dimension.

Taken together, these unstandardized regression weights provide empirical support for the hypothesized hierarchical structure. The significant paths from ISC, ISP, and ISPr to their respective first-order factors confirm that the lower-order constructs are appropriately nested within their higher-order domains, thereby validating the multidimensional conceptualization of inclusiveness across school culture, policy, and practice.

- **Standardized Regression Weights of the Higher-Order CFA Measurement Model**

To further evaluate the adequacy of the hierarchical measurement structure, standardized regression weights (λ) and corresponding error variances ($\theta = 1 - \lambda^2$) were examined. In a higher-order CFA framework, standardized loadings indicate the strength of association between each first-order construct and its superordinate dimension, whereas error variances represent unexplained variance at the first-order level (Brown, 2015; Byrne, 2016; Kline, 2023). As shown in Appendix D (Table 4.22), ISC exhibited very strong standardized loadings on BC ($\lambda = 0.978$, $\theta = 0.044$) and EIV ($\lambda = 0.984$, $\theta = 0.032$), indicating that ISC explains approximately 96–97% of the variance in its first-order components and confirming the internal coherence of the higher-order cultural dimension.

Within the ISP domain, PAI loaded very strongly on the higher-order factor ($\lambda = 1.107$), while OS also demonstrated a substantial loading ($\lambda = 0.851$, $\theta = 0.276$). The loading of PAI slightly above 1.00 yields a negative residual variance ($\theta = -0.225$), indicating a Heywood case (Kline, 2023). A Heywood case represents an inadmissible solution in which the estimated explained variance exceeds 1.00, typically arising from extremely strong factor–indicator associations, sampling fluctuation, or high inter-factor correlations rather than necessarily reflecting model misspecification (Kolenikov and Bollen, 2012). In the present model, this was a localized anomaly: no additional negative variances or improper estimates were detected, global fit indices were excellent across multiple classes of fit measures, and bootstrap replications indicated stable parameter estimates. Substantively, the exceptionally strong loading of PAI on ISP is theoretically coherent, as policy awareness and implementation constitute the core operationalization of institutional policy inclusiveness. Accordingly, the parameter was retained and interpreted as a boundary estimation condition within an otherwise well-fitting and theoretically grounded model.

For the ISPr construct, both RP ($\lambda = 0.930$, $\theta = 0.135$) and TL ($\lambda = 0.849$, $\theta = 0.279$) loaded strongly on the higher-order dimension, indicating that ISPr explains approximately 72–87% of the variance in its first-order indicators. This balanced loading pattern underscores the integrated role of both pedagogical processes and resource provision in shaping inclusive school practice and supports the conceptualization of ISPr as a cohesive higher-order construct.

Overall, all standardized loadings exceeded the commonly recommended threshold of 0.70 (Byrne, 2016; Hair et al., 2019), with most coefficients approaching or exceeding 0.85. Taken together, these findings provide strong evidence of higher-order convergent validity and confirm that ISC, ISP, and ISPr function as well-defined superordinate constructs that coherently integrate their respective first-order dimensions within the hierarchical measurement model.

- **Factor Correlations among the Second-Order Constructs**

Following confirmation of the adequacy of the higher-order measurement model, correlations among the three second-order latent constructs were examined to evaluate the degree of conceptual relatedness across the domains of ISC, ISP, and ISPr. In higher-order CFA, factor correlations provide important evidence regarding the extent to which theoretically distinct dimensions operate in an integrated yet non-redundant manner. As reported in Appendix D (Table 4.23), ISC was moderately correlated with ISP ($r = 0.609$) and strongly correlated with ISPr ($r = 0.784$), while ISP

was also strongly correlated with ISPr (r = 0.738). These magnitudes indicate substantial conceptual overlap consistent with the systemic nature of inclusive schooling, where cultural climate, policy infrastructure, and pedagogical practice are inherently interdependent.

Importantly, none of the correlations approach the commonly cited threshold of .85 that would indicate multicollinearity or construct redundancy (Kline, 2023). Thus, while the domains are closely interwoven—as expected in whole-school inclusion models—they remain empirically distinguishable. This pattern supports the interpretation that school culture, policy, and practice function as strongly related yet analytically separable higher-order dimensions within the broader construct of school inclusiveness for SWDs.

- **Discriminant Validity of Second-Order Constructs**

Discriminant validity among the second-order constructs—ISC, ISP, and ISPr—was assessed using the Fornell–Larcker criterion and complementary shared-variance diagnostics, consistent with recommended SEM measurement evaluation procedures (Fornell & Larcker, 1981; Hair et al., 2019; Kline, 2023). The AVE for each construct was computed from the squared standardized higher-order loadings, and the square root of AVE (√AVE) was compared with the correlations among the second-order constructs. Discriminant validity is supported when √AVE exceeds the corresponding inter-construct correlations, indicating that each construct shares more variance with its indicators than with other constructs in the model.

Table 4.24

Discriminant Validity Matrix for Second-Order Constructs (AVE vs. Squared Correlations)

Construct	AVE	√AVE	MSV	ASV	ISC	ISP	ISPr
ISC	.962	.981	.615	.493	.981		
ISP	.975	.987	.544	.458	.609	.987	
ISPr	.793	.890	.615	.580	.784	.738	.890

Note. Discriminant validity is supported when √AVE exceeds the correlations in the corresponding row/column (Fornell & Larcker, 1981) and when AVE > MSV and AVE > ASV for each construct.

As shown in Table 4.24, all three constructs satisfied the Fornell–Larcker criterion. Specifically, √AVE for ISC (.981) exceeded its correlations with ISP (.609) and ISPr (.784); √AVE for ISP (.987) exceeded its correlations with ISC (.609) and ISPr (.738); and √AVE for ISPr (.890)

exceeded its correlations with ISC (.784) and ISP (.738). The AVE values themselves were substantial (ISC = .962, ISP = .975, ISPr = .793), indicating strong variance capture at the second-order level and confirming that each higher-order construct explains a large proportion of variance in its respective first-order dimensions. Additional evidence for discriminant validity was obtained through comparison of AVE with MSV and Average Shared Variance (ASV) (Hair et al., 2019). For each construct, AVE exceeded both MSV and ASV (ISC: .962 > .615 and .493; ISP: .975 > .544 and .458; ISPr: .793 > .615 and .580), demonstrating that each construct captures more variance from its own indicators than it shares with the other higher-order constructs.

Taken together, these results provide robust evidence that although ISC, ISP, and ISPr are strongly interrelated—as expected within a whole-school inclusivity framework—they remain empirically distinguishable higher-order dimensions. Thus, discriminant validity at the second-order level is firmly supported within the hierarchical measurement model of school inclusiveness for SWDs.

4.1.4.3. Summary of the CFA Measurement Models

The evaluation of the lower-order and higher-order CFA measurement models followed a sequential, theory-driven, and psychometrically rigorous process to ensure that the latent structure of school inclusiveness for SWDs was adequately represented and appropriate for subsequent structural modeling. All CFAs were estimated in AMOS (Version 23) using ML estimation. To strengthen the robustness of model-fit evaluation under potential departures from multivariate normality, Bollen–Stine bootstrapping (2000 resamples) was applied, providing additional assurance regarding parameter stability and overall model adequacy under mild distributional deviations (Bollen & Stine, 1992; Nevitt & Hancock, 2001).

At the first stage, CFA was used to confirm the measurement properties of the six revised lower-order constructs representing distinct but related dimensions of teachers' perceptions of inclusiveness. The revised lower-order CFA model demonstrated strong empirical adequacy, with fit indices collectively indicating close approximation to the observed covariance structure and favorable comparative fit relative to the independence model (see Appendix D (Table 4.14)). In addition to demonstrating strong global fit, the lower-order solution established the necessary psychometric foundation for hierarchical modeling by confirming that the first-order factor structure was coherent, reliable, and empirically stable (Brown, 2015; Byrne, 2016; Kline, 2023).

At the second stage, a higher-order CFA was estimated to test whether the six first-order factors could be parsimoniously organized under three theoretically grounded second-order constructs: ISC, ISP, and ISPr. This specification was conceptually justified and empirically warranted given the substantial correlations observed among the first-order constructs in the revised lower-order model—a condition that commonly motivates higher-order modeling to enhance conceptual integration and parsimony (Marsh & Hocevar, 1985; Brown, 2015). The revised higher-order model likewise demonstrated excellent fit across absolute, incremental, parsimony-adjusted, and information-theoretic indices (see Appendix D (Table 4.20)), indicating that the hierarchical specification preserved model adequacy while offering a more theoretically integrated representation of teachers' perceptions of school inclusiveness for SWDs. Across both stages of analysis, fit evaluation was conducted using complementary classes of indices, and consistent patterns across Tables 4.14 and 4.20 indicate that neither the refinement of the lower-order model nor the imposition of a higher-order structure compromised empirical fit. Rather, the convergence of evidence across these distinct index families strengthens confidence in the stability, parsimony, and potential replicability of the measurement framework.

Beyond global model fit, construct validity evidence further reinforced the robustness of the hierarchical measurement structure. The second-order constructs were positively and meaningfully interrelated, consistent with a systemic conceptualization of inclusiveness across school culture, policy, and practice. At the same time, discriminant validity at the second-order level was supported using the Fornell–Larcker criterion and shared-variance diagnostics, demonstrating that each domain captured more variance from its indicators than it shared with adjacent domains (Fornell & Larcker, 1981; Hair et al., 2019). Thus, the higher-order constructs were shown to be both theoretically interconnected and empirically distinguishable.

Overall, the combined evidence from the revised lower-order CFA model (Table 4.4) and the revised higher-order CFA model (Table 4.10) shows that the measurement framework exhibits strong psychometric integrity and theoretical coherence. Taken together, these findings confirm that the hierarchical specification is empirically defensible and conceptually aligned with the multidimensional nature of inclusive schooling. This validated hierarchical measurement architecture provides a rigorous and defensible basis for proceeding to SEM aimed at examining the interrelationships among ISC, ISP, and ISPr within the broader inclusion framework for SWDs.

4.1.4.4. Structural Relationships among Inclusive School Culture, Policy, and Practice

This section presents the results of the SEM analysis conducted to examine how teachers working in Addis Ababa government primary schools perceive the interrelationships among the three core dimensions of school inclusivity—ISC, ISP, and ISPr. The SEM analysis directly addresses RQs 3 and 4, namely: (a) What is the structural relationship among teachers' perceptions of ISC, ISP, and ISPr?; and (b) To what extent do teachers' perceptions of the ISP mediate the relationship between their perceptions of the ISC and the ISPrs for SWDs in public primary school settings? By situating these questions within Ethiopian policy-implementation conditions, the analysis focuses on how teachers interpret and connect cultural norms, formal policy texts, and day-to-day school practices concerning SWDs.

Following the confirmation of the measurement models through first-order and higher-order CFA, a structural model was specified to test theoretically derived assumptions regarding the directional pathways linking ISC, ISP, and ISPr as they are perceived and enacted by teachers and school leaders in public primary schools of Addis Ababa. The model incorporated four central propositions: (a) teachers' perceptions of an ISC would positively predict their perceptions of ISP; (b) ISC would exert a direct effect on teachers' perceptions of ISPr; (c) ISP would directly influence ISPr, reflecting the expectation that school-level interpretation and administrative operationalization of policy directives shape classroom routines and instructional decisions; and (d) ISP would operate as a mediating mechanism in the relationship between ISC and ISPr, such that inclusive cultural norms influence everyday practices in part through their translation into policies, procedures, and organizational arrangements under existing institutional capacity limits.

SEM was carried out in AMOS (Version 25) using ML estimation. Model evaluation proceeded in two stages. First, overall model fit was assessed using a combination of absolute and incremental fit indices (e.g., χ^2/df, CFI, TLI, RMSEA, and SRMR), with acceptable fit indicating that the hypothesized structural configuration adequately represented the observed covariance structure among ISC, ISP, and ISPr as reported by teachers across the sampled public primary schools. Second, the substantive hypotheses were evaluated by examining the size, direction, and statistical significance of the standardized path coefficients (β), alongside indirect and total effects for the

mediation pathways. Confidence intervals and p-values were used to determine the robustness of direct and indirect effects, recognizing that teachers' responses reflect perceptions shaped by school-level routines, leadership practices, and available resources rather than objective policy compliance alone.

The resulting structural model provides an integrated account of how teachers perceive the interplay between school culture, policy, and practices in relation to the inclusion of SWDs within Addis Ababa's public primary school system. The SEM findings, including model-fit indices, path coefficients, and mediation effects, are summarized in Table 4.25 and are interpreted in detail in the subsections that follow. Figure 4.3 presents the estimated structural model depicting the hypothesized directional pathways among ISC, ISP, and ISPr for SWDs. The corresponding standardized path estimates are reported in Table 4.25.

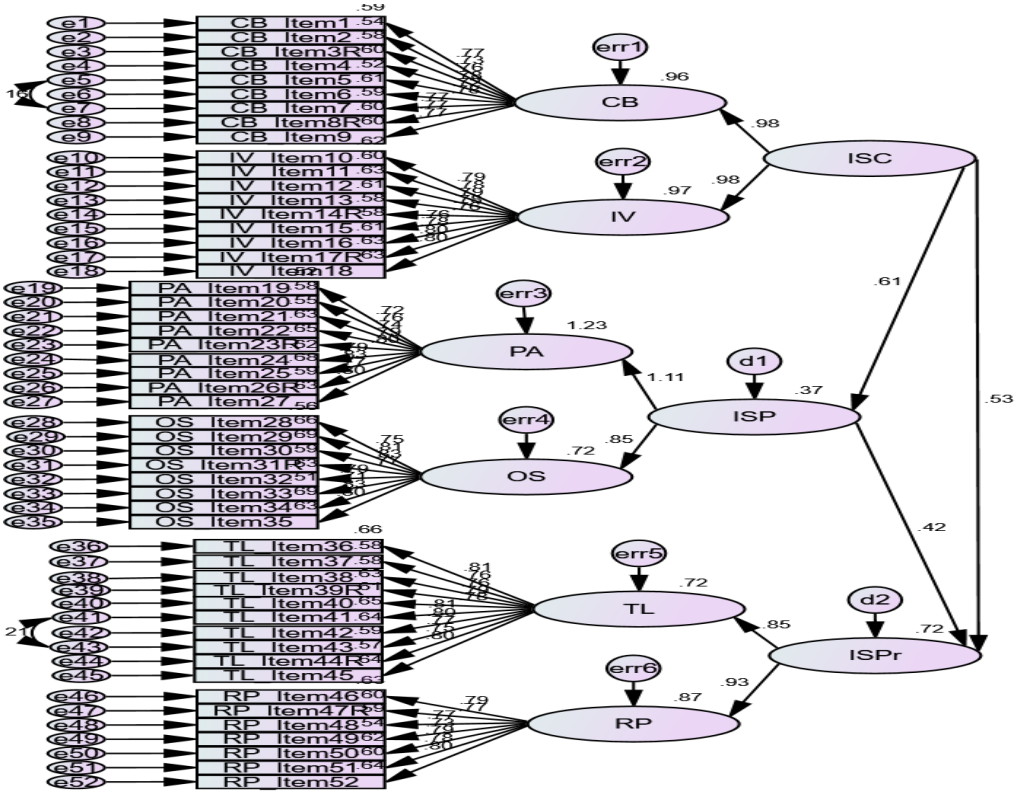

Figure 4.3. Structural Interrelationships among Teachers' Perceptions of Inclusive School Culture, Policy, and Practices for SWDs (SEM model).

4.1.4.4.1. Analysis of Structural Paths and Indirect (Mediation) Effects

This subsection presents the results of the structural model addressing the direct structural relationships among teachers' perceptions of the ISC, ISP, and ISPr (RQ3) and the mediating role of ISP in the relationship between ISC and ISPr (RQ4) as experienced within Addis Ababa government primary schools serving Ss. The model was estimated in AMOS (Version 23) using ML estimation. Given the well-established sensitivity of mediation tests to non-normal sampling distributions, bias-corrected and accelerated (BCa) bootstrapping was used to obtain resampling-based standard errors and confidence intervals for indirect effects (2000 bootstrap resamples, 95% confidence intervals), consistent with recommended SEM practice for mediation inference (Kline, 2023; Preacher & Hayes, 2008). Substantive interpretation of the structural model is anchored in the magnitude and direction of standardized effects, the statistical support for estimated parameters, and the explanatory power of the model as reflected in squared multiple correlations (R^2) for endogenous constructs, thereby linking statistical relationships to the degree to which cultural and policy perceptions account for variation in perceived inclusive practices across schools (Hair et al., 2019; Kline, 2023).

4.1.4.4.2. Direct structural relationships among ISC, ISP, and ISPr

The structural results provide coherent empirical support for the proposed ordering among the second-order domains of teachers' perceptions of school inclusiveness for SWDs in the Addis Ababa public primary school context. As reported in Table 4.25, ISC demonstrated a strong positive direct effect on ISP ($\beta = .609$, $p < .001$). This effect indicates that schools perceived by teachers as more inclusive in their cultural foundations—reflected in shared inclusive values, collegial norms of support, and community-oriented orientations—tend also to be perceived as stronger in inclusive policy arrangements as interpreted and operationalized by school leadership and teaching staff. Conceptually, the finding suggests that inclusivity of school culture constitutes a normative environment that facilitates, legitimizes, and sustains the development and enactment of inclusivity of policy within schools, particularly where formal policy directives require translation into workable routines under conditions of limited material and professional resources (Hair et al., 2019; Kline, 2023).

Beyond its association with policy, ISC also exhibited a statistically significant direct relationship with ISPr ($\beta = .531$, $p < .001$). This result indicates that teachers' perceptions of an inclusive culture are linked to more inclusive practices even after accounting for the contribution of school policy guidance, suggesting that cultural conditions may influence practice through channels that extend beyond formal policy mechanisms, such as shared expectations about accommodating SWDs, collegial consultation, and informal problem-solving within classrooms. In parallel, ISP showed a moderate positive direct effect on ISPr ($\beta = .415$, $p < .001$), indicating that teachers who perceive policies as inclusive also tend to perceive school practices as more inclusive for SWDs, particularly where policy guidance is actively interpreted and reinforced by school administrators. Taken together, these direct paths suggest that inclusive practices are shaped through both the normative–relational domain (culture) and the institutional–regulatory domain (policy), as enacted through teacher decision-making and school-level coordination rather than through policy texts alone (Hair et al., 2019; Kline, 2023).

Table 4.25.

Structural Path Estimates for the Second-Order Structural Model (Standardized Direct Effects)

Endogenous variable	Predictor (path)	*B*	*SE*	*CR*	*p*	β	95% BCa CI	R^2
ISP	ISC → ISP	0.717	0.062	11.648	< .001	**.609**	[.487, .737]	.371
ISPr	ISC → ISPr	0.559	0.059	9.508	< .001	**.531**	[.381, .688]	.723
	ISP → ISPr	0.371	0.047	7.910	< .001	**.415**	[.327, .506]	

Note. $N = 424$. *B* = unstandardized regression weight; *SE* = standard error; *CR* = critical ratio; β = standardized regression weight; BCa CI = bias-corrected and accelerated bootstrap confidence interval (2000 resamples); R^2 = squared multiple correlation.

The structural model further demonstrated substantial explanatory power for the endogenous constructs (Table 4.25). ISC accounted for 37.1% of the variance in ISP ($R^2 = .371$), indicating that policy perceptions are meaningfully grounded in perceived cultural conditions within these sampled schools. Additionally, ISC and ISP jointly explained 72.3% of the variance in ISPr ($R^2 = .723$), demonstrating that teachers' perceptions of inclusive practices are strongly accounted for by the combined influence of cultural and policy perceptions. Substantively, the magnitude of explained variance indicates that teachers' perceptions of ISPr are jointly shaped by the school's underlying cultural commitments to inclusion and by the policy framework that organizes and

guides the enactment of inclusive approaches, within the practical constraints of classroom size, available instructional materials, and existing staff capacity (Hair et al., 2019).

4.1.4.4.3. Indirect (mediation) effects of ISC on ISPr via ISP

The mediating role of ISP in the relationship between ISC and ISPr was evaluated using bootstrap-based estimation of the indirect effect, consistent with best-practice recommendations for mediation testing in SEM (Kline, 2023; Preacher & Hayes, 2008). AMOS provides the model-implied indirect effect along with bootstrapped standard errors and bias-corrected confidence limits. As reported in Table 4.26, the unstandardized indirect effect of ISC on ISPr through ISP was positive (B = 0.266) and statistically different from zero based on bootstrap inference (bootstrapped SE = 0.040). Importantly, the 95% bias-corrected (BC) bootstrap confidence interval did not include zero (95% BC CI [0.188, 0.340]), and the corresponding two-tailed bootstrap significance test further supported the indirect pathway (p = .015, BC). Substantively, this indicates that inclusive cultural conditions, as perceived by teachers, contribute to inclusive practices partly by strengthening perceptions of inclusive policy, which subsequently relate to stronger perceptions of inclusive practices for SWDs through school-level interpretation and procedural alignment.

For interpretive completeness, the standardized indirect effect was also positive (β = .253), indicating that the mediated association is meaningful not only in statistical terms but also in standardized effect-size terms. The presence of this significant mediated pathway supports the interpretation that policy is an institutional conduit through which inclusive cultural orientations may be translated into more consistent and observable inclusive practices as perceived by teachers, particularly where school leadership formalizes inclusive expectations into routines and guidelines.

Table 4.26.

Bootstrapped Indirect Effect of ISC on Inclusive School Practices via ISP

Effect type	Pathway	*B*	Bootstrapped *SE*	95% BC CI for *B*	Two-tailed *p* (BC)	β
Indirect effect	ISC → ISP → ISPr	0.266	0.040	[0.188, 0.340]	.015	.253

Note. N = 424. ISC = Inclusive School Culture; ISP = Inclusivity of School Policy; ISPr = Inclusivity of School Practices. B = unstandardized indirect effect; bootstrapped SE and 95% BC CI are derived from AMOS bootstrap output (2000 resamples). BC CI = bias-corrected bootstrap confidence interval. β = standardized indirect effect (from AMOS standardized indirect effects output).

Crucially, the direct path from ISC to ISPr remained statistically significant in the presence of ISP (Table 4.26). Within the logic of mediation, a statistically supported indirect pathway alongside a remaining significant direct pathway constitutes evidence of partial mediation (Kline, 2023; Preacher & Hayes, 2008). Substantively, this pattern suggests that inclusive culture influences inclusive practice through at least two mechanisms: (a) an institutional mechanism, whereby culture shapes perceived policy inclusivity, which then supports practice, and (b) a direct cultural mechanism, whereby inclusive norms, shared expectations, collegial relationships, and everyday school interactions translate into practice beyond what is formalized in policy. Thus, policy functions as a meaningful but not exhaustive explanatory pathway linking school culture to inclusive practice within Addis Ababa government primary schools.

In summary, the structural results provide an empirically grounded account of how teachers' perceptions of school inclusiveness for SWDs are organized across culture, policy, and practice in the Addis Ababa public primary school context. ISC emerged as a central antecedent, exerting both a direct influence on ISPr and an indirect influence operating through ISP. The mediation analysis demonstrated that ISP carried a statistically significant portion of the association between ISC and ISPr, as evidenced by a positive indirect effect whose bias-corrected confidence interval excluded zero (B = 0.266, 95% BC CI [0.188, 0.340], p = .015) and a substantively meaningful standardized indirect effect (β = .253). At the same time, because the direct relationship between ISC and ISPr remained statistically significant after ISP was included in the model, the findings support an interpretation of a partial mediation.

Taken together, these findings reinforce a whole-school perspective on inclusive education for SWDs as perceived by teachers operating within Ethiopian public primary schools characterized by varying levels of administrative support and material capacity. Within this system, school culture appears to operate not merely as a broader contextual condition in the background but as an active determinant of inclusive enactment by exerting influence both directly on practices and indirectly by shaping the inclusivity of school policy. Policy, in turn, appears to serve as an

enabling institutional mechanism that formalizes inclusive norms and supports their consistent operationalization in practice. The persistence of a direct cultural pathway additionally suggests that strengthening inclusive practices may require interventions that address the relational and normative features of school culture alongside efforts to develop, clarify, and implement inclusive policies and procedures.

4.2. Qualitative Findings: Phase II

4.2.1. Organization, Context, and Approach

Phase II presents the qualitative findings that explain, contextualize, and deepen the key statistical patterns identified in Phase I (survey). Data were generated from four complementary sources: teacher FGDs, semi-structured KIIs with IERC coordinators and SNE focal persons, non-participant structured school observations, and a structured review of school-level planning and operational documents. Schools are identified using analytic labels (Schools A–L) to protect anonymity while allowing cross-school comparison. Findings are organized around the study's three inclusion dimensions—ISC, ISP, and ISPr—to show how inclusion is experienced and enacted across culture, policy, and practice.

Teacher FGDs highlight the everyday negotiation of inclusion within classroom and school routines. Where teachers differentiate learners by disability type and/or perceived support intensity, these distinctions are interpreted as indicators of system–student mismatch rather than learner deficits. KIIs clarify coordination processes, authority, and implementation constraints that shape teachers' accounts and help interpret survey patterns. Observations assess whether adaptations are accessible, functional, and routinely used rather than merely present, while document review captures how inclusion is formally expressed in plans, rules, and records. Across each thematic area, these sources are triangulated to explain, extend, or qualify the Phase I findings.

4.2.2. Inclusive School Culture (ISC)

In this study, ISC refers to the shared beliefs, norms, and relational practices that shape whether SWDs experience membership, dignity, and participation in everyday school life. Accordingly,

collaboration is treated here primarily as a relational phenomenon—peer climate, staff norms, trust, and routine social practices. Collaboration as formal system architecture (e.g., defined roles, team routines, case-review mechanisms, and accountability) is addressed under ISP to maintain analytic boundaries across C-P-P. The section synthesizes qualitative evidence on how inclusion is manifested and constrained within school culture, focusing on building an inclusive community and establishing inclusive values for SWDs.

a) Building Community: Relational Commitment amid Fragile Belonging

BC captures the relational conditions through which SWDs experience membership, dignity, and participation in daily school life, including welcome and valued membership, peer relations, school–family trust and communication, leadership modelling, and opportunities for SWDs' voice. Here, collaboration is treated as relational climate and informal mutual support; formal coordination routines and case-review mechanisms are addressed under OS. Across the qualitative sources, the dominant pattern is not a lack of goodwill but weak routinization of belonging, participation, and protection, especially for students with higher support needs.

1) Evidence from FGDs: BC

- **Welcome without belonging.**

Across most schools, teachers differentiate between admission-level inclusion and membership-level inclusion. While schools may publicly welcome SWDs and treat enrolment as evidence of inclusion, teachers describe belonging as something that is built—or withheld—through everyday classroom and school routines. Belonging shows up in small, repeated membership cues: being chosen for group work, being trusted with classroom responsibilities, being included in play and co-curricular activities, and being recognized as a legitimate peer. In many schools, SWDs—especially those requiring more intensive support—are therefore described as physically present but socially and academically marginal.

Viewed through a system–student mismatch lens, this pattern suggests that membership becomes conditional when school routines presume a typical learner pace, communication style, and performance profile. As support needs intensify, the gap widens between what learners require to participate as full members and what routine schooling is set up to provide. Analytically, this

subtheme centers membership (recognition, peer legitimacy, everyday belonging cues), rather than activity access or decision-making pathways.

In School A, teachers described a gap between public welcome and everyday membership. As one teacher explained, “At the gate we can welcome them, but inside the actual school life it is different. A child with severe intellectual disability is there, but many people treat the child like someone we just tolerate” (Teacher FGD, School A). Other participants in the group expressed similar concerns. Teachers in School B linked this gap to classroom routines and performance expectations, noting, “We say, ‘We accept everyone,’ but in group work we do not choose children with disabilities as group leaders because we worry the lesson will slow” (Teacher FGD, School B). This concern was echoed by others and was framed in the context of time pressure and content coverage. In School E, teachers highlighted that formal welcoming does not automatically translate into peer membership: “We have a welcome program once a year, but after that …in break time and clubs, not every child is called to join” (Teacher FGD, School E). Similarly, in School L, teachers contrasted official enrollment with lived membership under coverage-driven routines: “In enrollment they are included, but in practice some of them are only tolerated… especially when we are rushing to finish the unit” (Teacher FGD, School L).

Overall, teachers’ accounts indicated that when belonging is not routinized as a predictable expectation, inclusion becomes fragile and contingent on perceived “fit” with prevailing routines. For SWDs, this implies that their membership is often reliant on discretionary goodwill rather than safeguarded by shared expectations that withstand the pressure of everyday instruction. This underscores the necessity for predictable membership practices, such as peer-buddy structures, accessible classroom roles, and explicit participation expectations that apply across disability types, so that belonging is less reliant on informal discretion.

- **Presence without participation.**

Building on the membership gap above, teachers described presence without participation as a distinct problem of agency: being enrolled and physically present, yet lacking supported access to roles, voice, and meaningful contribution in routine school activities and learning decisions. Teachers told that SWDs are often left out of the spaces where school community is enacted, like group learning, morning assemblies, ceremonies, clubs, sports, and other events. Exclusion was

often justified as protection, practicality, or preventing disruption; however, teachers emphasized that these rationales commonly translate into SWDs watching rather than engaging.

Teachers also described limited opportunities for SWDs to express preferences, make choices, or take part in decisions about learning and school life, especially where communication supports are absent or unreliable. In system–student mismatch terms, participation becomes conditional on perceived manageability: when routines are designed for a "typical learner" and supports are not built in, agency is treated as optional rather than expected. Analytically, this subtheme centers participation and voice (supported roles, contribution, and decision-making pathways), not membership recognition or peer legitimacy.

Teachers in School C described restrictions during public routines, noting, "When we plan school events, students with severe autism are often taken to another room….because people worry they may disturb the program" (Teacher FGD, School C). Teachers in School D linked exclusion to activity design: "Children with moderate intellectual disability are not included in many activities because the activities are prepared for them" (Teacher FGD, School D). In School A, teachers stressed limited student voice for those with high support needs: "For children with complex needs, we do not really encourage them to express their views" (Teacher FGD, School A), a concern shared within the group and linked to limited communication support and lesson pace. In School L, teachers extended the pattern to learning decisions: "Students with severe disabilities are rarely involved in decisions about their learning, even small decisions" (Teacher FGD, School L).

These accounts indicate that when participation and voice are not actively supported, inclusion is reduced to placement. In system–student mismatch terms, participation becomes conditional on perceived manageability, and is least secure for children with higher support needs. The implication is to redesign activities with accessible roles, set supported involvement routes, and embed potentially appropriate ways of motivating and honoring SWDs' preferences and choices.

- **Uneven respect**

Across most schools, teachers described respect as uneven, with stigma, teasing, avoidance, pity-based treatment, and casual labeling weakening community membership. Even where adult intentions are supportive, labels such as "special child" or "special student" can become public

markers that reshape peer relations and quietly lower expectations. Teachers also indicated that staff responses to discriminatory behavior are inconsistent, enabling stigma to persist. From a system-student mismatch perspective, these dynamics reflect weaknesses in the school's social protection routines and language norms rather than individual learner deficits.

Teachers in School B noted, "Some students tease children with disabilities, and even some adults treat them with pity, not like the other learners" (Teacher FGD, School B), signifying that 'helping' may still communicate unequal membership. In School A, teachers emphasized inconsistent adult responses: "Respect is not the same in our school… when teasing happens, not every teacher reacts the same" (Teacher FGD, School A), a concern echoed by other participants. In School G, teachers stressed the public effects of labeling: "When we say 'special needs' in front of the class, the children understand immediately who we mean, and then that child is singled out" (Teacher FGD, School G). Teachers in School F described how expectations shift after identification: "After we say a child has special needs, some teachers stop asking that child questions or giving duties… it is not always on purpose, but it happens" (Teacher FGD, School F).

Overall, teachers' accounts suggest that a weak respect climate undermines peer membership and narrows participation. For SWDs, dignity is, hence, shaped not only by attitudes, but by the consistency of adult follow-up and the strength of daily protection norms. The implication is the need for consistent anti-harassment routines, staff language norms, peer sensitization, and confidential mechanisms for OS so that assistance does not itself become a source of stigma.

- **Collaboration without routine: leadership endorsement without collective practice**

Across many schools, teachers reported that collaboration and leadership endorsement exist, but are not secured as a routine, collective practice. Collaboration among staff was described as irregular and largely informal, making inclusion dependent on individual initiative rather than shared routines. Teachers also recognized leadership support for inclusive culture, but emphasized that messaging does not automatically translate into coordinated staff practice or consistent student-level inclusion. Analytically, this represents a gap between discursive endorsement and routinized relational support, with classroom participation outcomes remaining uneven. Teachers repeatedly located this unevenness in everyday constraints (coverage pressure, large class size, limited time), which amplifies vulnerability for SWDs and children with higher support needs.

In School I, teachers described informal, ‘ad hoc’ support, noting, “Most of the time we help each other only informally, so the support depends on which teacher the child is with” (Teacher FGD, School I). In School C, teachers observed, “We collaborate sometimes, but not regularly… if we are busy with lessons, everyone just goes back to their own class” (Teacher FGD, School C). In School H, teachers acknowledged leadership encouragement while emphasizing limited effects on participation: “The principal keeps telling us to work together… but in the classroom, students with disabilities still do not participate like the others” (Teacher FGD, School H). In School E, teachers similarly noted that staff goodwill does not guarantee protection and access: “Teachers can be good with each other and the management can support us, but still some students get teased, and some lessons are not easy for them to follow” (Teacher FGD, School E).

Teachers’ accounts suggest that ad hoc collaboration makes inclusion inconsistent and dependent on goodwill. The implication, within the Culture domain, is to strengthen predictable relational routines (e.g., shared expectations for participation, common peer-support norms, consistent adult follow-up), while formal coordination mechanisms are treated under the Policy domain to preserve conceptual boundaries.

- **Problem-driven school–family contact**

Across most schools, teachers described school–family engagement around disability as largely problem-triggered, limiting trust, continuity, and shared responsibility. Communication with families was typically activated when difficulties escalated or when administrative action was required, rather than through routine joint planning for learning and participation. Teachers also noted that stigma and low trust can constrain family engagement, leaving inclusion work to be carried by individual teachers rather than supported through predictable partnership routines. Analytically, these accounts indicate relational instability shaped by stigma and the absence of routinized communication channels.

In School E, teachers observed, “With parents, we usually talk when there is a serious issue, not as a routine partnership” (Teacher FGD, School E). In School B, contact was framed as largely administrative: “Many times we call the parents for signatures or when the child is not coping, but we don’t sit with them regularly to plan” (Teacher FGD, School B). In School K, teachers linked limited engagement to stigma: “Parents often come only when we call them… some don’t want

other people to know" (Teacher FGD, School K). In contrast, teachers in School J described a modest routine that wired partnership: "We started a monthly coffee meeting with parents… even if we miss some months, at least now they know the door is open" (Teacher FGD, School J).

Overall, teachers' accounts suggest that when partnership is crisis-driven, support becomes uneven and trust remains fragile. Its implication is to establish predictable partnership routines (scheduled check-ins, shared support goals, clear points of contact, and stigma-sensitive communication practices) that normalize partnership rather than activating it only during problems.

Holds under pressure: These micro-routines stabilized belonging by reducing reliance on chance and individual discretion, creating predictable cues for protection and participation even under workload and coverage pressures. The implication is not the introduction of more one-off events, but the embedding of simple, repeatable protective practices, such as scheduled family check-ins, explicit participation roles for SWDs in everyday activities, and consistent adult follow-up when stigma or exclusion occurs. To corroborate and extend teachers' accounts by clarifying coordination, authority, and contextual constraints, KII evidence further indicates that inclusion is widely welcomed in principle, yet unevenly shared and inconsistently sustained in routine participation and support, particularly for students with intensive support needs.

2) Evidence from KIIs: BC

- **Conditional and Differentiated Membership**

Across interviews, coordinators portrayed inclusion of SWDs as visible in enrollment and attendance but fragile in relational and participatory terms. Physical presence in mainstream classrooms did not consistently translate into meaningful learning or peer integration. As one coordinator noted, "We have students with disabilities who are enrolled and coming daily, but 'being in classes' does not always mean they are really learning with the others" (IERC coordinator, School A). This fragility was especially pronounced for learners with higher support needs. Belonging was discriminated by disability type and support intensity, with learners requiring structured support more likely to experience marginal engagement or separation. As one participant observed, "For children with mild needs, teachers try, but for those who need structured support…placement becomes separate" (coordinator, School C). Community membership thus appeared contingent on perceived support feasibility rather than uniformly secured participation.

- **Fragile Relational Infrastructure: Person-Dependent Collaboration and Reactive Ties**

Community-building was described as dependent on the strength and continuity of collaboration among classroom teachers, IERC personnel, and parents; however, such collaboration was widely portrayed as inconsistent and reliant on individual personalities rather than stabilized as a collective norm. When homeroom teachers engaged proactively, support strengthened; when they disengaged, coordination narrowed into ad hoc response. As summarized, "When a homeroom teacher works closely with us, the child improves. When the teacher says, 'I have 60 students,' the support collapses" (IERC coordinator, School A). Parent engagement was similarly uneven and largely reactive, emerging primarily in response to problems rather than through sustained partnership. "We need more structured communication, not only when problems happen" (IERC coordinator, School I). Together, these patterns indicate relational ties that are activated situationally rather than embedded as stable community expectation.

- **Constrained Agency and Leadership-Mediated Legitimacy**

Coordinators further noted that SWDs' perspectives were seldom incorporated into decisions affecting their support, limiting learner agency within the school community. "Students with Disabilities rarely have a platform to express what they need; adults speak for them most of the time" (IERC coordinator, School L). Leadership emerged as a cultural mediator of collective responsibility. When principals explicitly emphasized inclusion, it gained school-wide legitimacy; when emphasis was muted, inclusion became discretionary and unevenly enacted. "When the principal talks about inclusion…staff take it seriously. When it is not emphasized, it becomes optional" (IERC coordinator, School G). Leadership thus shaped whether belonging was stabilized as a shared common or remained fragile and contingent. To verify these accounts through practice-facing indicators of enactment and usability, evidence from observations indicates that school environments inconsistently enabled SWDs to participate in routine school life.

3) Evidence from observations: BC

- **Assistance-Dependent Participation**

Although ISC is primarily relational and attitudinal, observation data offered practice-facing indicators of whether school environments enabled SWDs to participate in routine school life. Across schools, entry to compounds was often feasible, but independent movement and participation in everyday school activities were inconsistently supported. In this respect,

participation frequently appeared route-dependent and assistance-dependent, as physical circulation barriers limited safe and independent access between classrooms, sanitation facilities, play areas, and support spaces. Classroom usability also varied within schools, partly shaped by teacher-level organization such as desk layout, seating arrangements, and available space, suggesting that participation opportunities could be contingent on localized arrangements rather than consistently enabled through stable environmental design.

- **Informal and Situational Peer Support**

In addition, observations of classroom interaction and learning routines suggested that peer-mediated support, when it occurred, was largely informal and situational. Consistent with the checklist focus on observable practices (Section H), no systematically facilitated peer support programs (e.g., structured peer tutoring or clearly organized peer-support arrangements) were evident as routine inclusion mechanisms across the classrooms and support spaces observed. Where learners received support from peers, it appeared to depend on spontaneous help rather than organized, school-level structures. To examine institutional traces of formal intent, proceduralization, and accountability, evidence from document review indicates that BC commitments are broadly stated but weakly specified for distributed responsibility for SWDs.

4) Evidence from document review: BC

- **Broad Collaboration Rhetoric with Limited Distributed Specificity**

This subtheme is reported as documentary evidence of institutional articulation, indicating broad references to collaboration and shared responsibility, but limited specificity regarding distributed responsibility for inclusion of SWDs. School documents frequently emphasized collaboration, teamwork, and shared responsibility in general terms, often as part of values statements. In the illustrative case, values similarly foreground collaboration, responsibility, transparency, and service quality. However, responsibility for inclusion was seldom framed as a whole-school obligation. Where inclusive education was mentioned, it was often implicitly associated with SNE teachers or IERC/resource center personnel rather than distributed across school leadership, classroom teachers, and the wider school community. In triangulation terms, this documentary pattern aligns with qualitative accounts indicating that responsibility for SWDs is often understood as residing primarily with SNE teachers and resource center personnel rather than embedded across routine classroom instruction.

- **Relational Commitment amid Fragile Belonging (BC): Synthesis**

Across qualitative sources, BC is normatively affirmed yet structurally fragile. Enrollment and public welcome are visible and institutionally secured; however, belonging and participation are weakly routinized and differentiated by perceived support intensity. Membership remains contingent upon teacher discretion, leadership emphasis, and informal collaboration rather than stabilized through predictable relational expectations. Participation frequently appears assistance-dependent, peer support operates situationally, and school–family engagement is largely crisis-activated. Documentary rhetoric foregrounds collaboration, yet distributed responsibility for SWDs is weakly specified, implicitly concentrating obligation within SNE personnel. Taken together, these findings suggest that community is symbolically endorsed but unevenly institutionalized, producing conditional membership that fluctuates across actors, activities, and time under coverage pressure and resource constraints.

b) Establishing Inclusive Values (EIV) for SWDs

EIV refers to the school community's shared commitment to equity, fairness, and respect for diversity, evidenced through equal valuing of SWDs, a discrimination-free environment, positive peer relations, strengthened self-confidence among SWDs, and high expectations for all learners. To maintain conceptual boundaries with BC, this subsection foregrounds normative orientations and evaluative judgments (what counts as fairness, worth, success, and dignity), rather than membership dynamics, collaboration routines, or school–family partnership structures. Here, inclusive values refer to shared definitions of fairness and dignity and the norms that protect them, rather than the formal procedures used to organize support (addressed under Policy).

1) Evidence from FGDs: EIV for SWDs

- **Inclusive values affirmed in discourse, weakly institutionalized in practice**

Across most schools, teachers described inclusive values as publicly affirmed through rights-based language, moral obligation, and symbolic messaging, yet weakly institutionalized in everyday practice. Teachers emphasized that commitments to dignity and fairness are not consistently translated into routine practices that secure equitable participation and learning opportunities for SWDs. From a system-student mismatch lens, these accounts suggest that when daily routines remain unchanged, paced for uniform coverage and performance, values are affirmed but not enacted as binding norms.

Teachers in School G described this gap succinctly: “We talk about inclusion like it is the right thing. But when the lesson begins… the value stays in words, not in the class every day” (Teacher FGD, School G). In School C, inclusion was often framed as a moral duty grounded in care, for example, “we should not leave children… behind” and “we try to be patient”, but teachers also implied that care-based framing does not ensure equal learning opportunities without shared expectations for participation and progress (Teacher FGD, School C). In School H, teachers highlighted variability across classrooms: “We talk about it in meetings, but in the class it depends on the teacher” (Teacher FGD, School H). In School E, teachers described inclusion as present in plans but weak in follow-through: “Sometimes we write it in the plan, but we don’t follow it in a clear way” (Teacher FGD, School E).

When values remain largely declarative, equal valuing becomes contingent on individual will. The implication is to translate values into shared operational norms that can hold under daily pressures (lowest expectations for equitable treatment and participation; dignity-protecting routines; and leadership follow-up that treats equity as a standard rather than an optional disposition.

- **Exam accountability reorders value: equity becomes professionally risky**

In many schools, teachers portrayed exam results, averages, and ranking as dominant accountability drivers that narrow definitions of success and make equity-oriented accommodation feel professionally risky. Within this environment, time invested in flexible pacing, alternative participation, or accommodations is perceived as threatening coverage and measurable outcomes, thereby producing a context in which SWDs, specifically those with higher support needs, are positioned as misaligned with institutional performance pressures. Teachers in School G stated, “I am pushed to finish the syllabus content… later someone asks me why I didn’t finish” (Teacher FGD, School G). Teachers in School L described fear of blame: “When I try to adjust… the first question… is still, ‘why the results low?’” (Teacher FGD, School L). Teachers in School F summarized the same tension: “We are judged by marks and averages… I worry they will say I made the class results drop, adding that results-driven pressure quietly prioritizes students who “can keep up” (Teacher FGD, School F). These accounts suggest that sustaining inclusive values requires broadening institutional definitions of success to include participation, progress, and well-being, so equity is recognized rather than treated as a liability.

- **Equity as sameness; accommodation framed as advantage**

Across most schools, teachers described fairness as commonly interpreted as sameness, with accommodations moralized as an "unfair advantage." Within this framing, supports such as extra time, adapted tasks, or alternative response modes are easily recast as favoritism, discouraging differentiation and shifting responsibility back onto the learner to fit existing routines. Teachers in School A stated, "Many people here think fairness means we treat everyone the same… 'Just follow like the others'" (Teacher FGD, School A). In School E, teachers noted, "Others say it is favoritism… then the support is stopped" (Teacher FGD, School E). Teachers in School G emphasized, "People mix up equal and same" (Teacher FGD, School G). In School I, teachers described staff-level resistance to accommodations, with some framing support as an "advantage" (Teacher FGD, School I). Analytically, sameness-based fairness norms weaken rights-based understandings of equity. The implication is the need for shared, practical equity guidance that authorizes reasonable accommodation as a legitimate access measure.

- **Deficit framings and normalization of low expectations**

Across many schools, teachers described how deficit framings can normalize low expectations, narrowing definitions of success to compliance, quietness, or "manageability," particularly for learners described as autistic, intellectually disabled, or requiring intensive support. Notably, these accounts are interpreted here as reflecting constrained pedagogical options and weak support infrastructure rather than inherent learners' limitations. Teachers in School D stated, "We decide early what the child cannot do… the help becomes just keeping the child calm" (Teacher FGD, School D). Teachers in School H also noted, "Many of us see the limitation first" (Teacher FGD, School H). In School I, teachers described success as being defined primarily in terms of "sitting quietly" (Teacher FGD, School I). In School J, teachers reported that expectations drop sharply for learners with autism and intellectual disability, with goals shifting toward behavior control rather than learning progression (Teacher FGD, School J). These accounts suggest the need for disability literacy and capability-oriented language, alongside feasible supports that allow teachers to sustain high expectations as developmental progression rather than unrealistic standardization.

- **Respect affirmed; peer protection weakly enforced**

Across most schools, teachers indicated that respectful, discrimination-free interaction is widely endorsed but inconsistently protected through routine adult responses and clear norms.

Discrimination was described as subtle and normalized (nicknames, labeling, social exclusion, inconsistent intervention), leaving SWDs' dignity and confidence vulnerable. Teachers in School C stated, "Some children use nicknames such as 'those children'… when it happens, we just tell them 'don't say that'… there is no clear rule" (Teacher FGD, School C). In School I, teachers described stigma as normalized, particularly for learners with more intensive support needs (Teacher FGD, School I). Teachers in School B said peer inclusion is not enforced: "We don't tell students they must include them, so children with special needs end up alone" (Teacher FGD, School B). In School E, teachers noted that the difference was moralized (e.g., treating "the child is a problem") rather than framed in terms of needed support (Teacher FGD, School E). Where discrimination is handled informally, and peer relations are left to chance, inclusive values remain vulnerable. The implication is to strengthen explicit protection routines, shared language norms, and predictable adult responses that safeguard dignity.

Holds under pressure: In a few schools, teachers described routinized awareness-raising activities and commemorative events, such as disability awareness days, as practices that can uphold inclusive values under pressure by providing repeated and visible messaging about respect, fairness, and non-discrimination. These routines create shared reference points that support gradual attitudinal change and help stabilize inclusive commitments by making them publicly legible and consistently reinforced, particularly when exam accountability and curriculum coverage pressures risk normalizing stigma, low expectations, or "sameness-as-fairness" interpretations of equity. However, to move beyond symbolic affirmation, such awareness efforts must translate into enforceable everyday norms, including consistent adult responses to discrimination, shared language standards, clear expectations for peer inclusion, and explicit authorization of accommodation as legitimate equity rather than favoritism. To corroborate and extend teachers' accounts by clarifying coordination, authority, and implementation constraints, evidence from KIIs indicates that inclusion is often framed as admission in practice, even when coordinators describe it as a daily adjustment and reasonable accommodation.

2) Evidence from KIIs: EIV

- **Conceptual Narrowing of Inclusion: Registration without Anticipatory Participation**

Alongside concerns about community participation and collaboration, coordinators articulated a strong normative distinction between inclusion as formal admission and inclusion as a value-based

commitment to dignity, equitable access, and reasonable accommodation. Many rejected a narrow understanding of inclusion defined by registration alone and argued that authentic inclusion requires anticipatory, everyday adjustments in teaching, assessment, and classroom planning. One coordinator observed, "Many colleagues say 'we are inclusive' because we accept students with disabilities. But inclusion should be daily adjustments, not only registration" (IERC coordinator, School B). Another emphasized the ethical and pedagogical significance of planned participation rather than token presence: "Successful inclusion is when the child is not treated as a guest…when the classroom plan already considers them" (IERC coordinator, School D).

Despite this articulated value orientation, coordinators reported that prevailing operational meanings of inclusion within schools often remained logistical rather than pedagogical, anchored in managing segregated provision with intermittent access to mainstream activities. One participant explained, "Here, inclusion means managing the 'special class' and trying to get those students into regular activities sometimes" (IERC coordinator, School K). The tendency to externalize responsibility to specialist provision further reflected this narrowing of meaning. As one coordinator noted, "Many teachers still believe these children cannot learn the general curriculum. They see them as a responsibility for the 'special needs education' teacher, not as their students" (IERC coordinator, School E).

- **Procedural Minimalism: Compliance as Culturally Accepted Success**

Within this context, coordinators described how institutional definitions of "success" were sometimes framed in minimalist terms—attendance, behavioral compliance, and parent satisfaction—rather than meaningful participation and learning progress. As one coordinator put it, "If the child comes to school, does not disrupt the class, and the parents are happy, we consider that a success" (IERC coordinator, School A). Such definitions reflect a recalibration of inclusive value toward stability and non-disruption. Coordinators also described value tensions reflected in staff expectations. While some teachers demonstrated care and responsiveness, others were reported to hold deficit-oriented beliefs about SWDs' learning potential and to lower expectations prematurely—particularly for learners perceived as "hard to teach." One coordinator captured this tension: "Some teachers are genuinely supportive, but others still think students with disabilities cannot achieve the same learning goals, so they reduce expectations too quickly" (IERC

coordinator, School E). These accounts suggest that inclusion is sometimes culturally validated through minimal compliance rather than substantive academic engagement.

- **Individualized Moral Commitment: Personality-Dependent Inclusion**

Even where inclusive values were evident, coordinators indicated that they were more often embedded in individual dispositions than in institutional routines. Variation in teacher attitudes and expectations reflected this uneven embedding. Some teachers demonstrated personal dedication and responsiveness, while others distanced themselves from responsibility for SWDs by deferring to specialist provision. As one coordinator summarized, "Our strength is the personal dedication of a few teachers who truly care. Our constraint is that the system does not support them" (IERC coordinator, School C). These accounts indicate that inclusive value enactment is sustained largely through individual moral commitment rather than through collectively internalized professional norms, rendering inclusive culture dependent on personality rather than stabilized institutional expectation.

3) Evidence from observations: EIV

- **Materialized Dignity: Infrastructure as Symbolic Communication**

Observations also reflected how inclusion-related values were enacted through day-to-day conditions that communicate dignity, fairness, and equitable treatment. Toilets constituted one of the most consistent barriers across schools. Facilities marked (and in some cases reportedly designated) for disability access were frequently observed as unclean, difficult to reach, too narrow, lacking grab bars/handrails, and constrained in internal space and privacy. Such conditions are consequential for both participation and dignity. More broadly, visible accommodations did not reliably translate into equitable access in practice; for example, ramps were present in multiple schools but were often steep, cracked, obstructed, lacked handrails, or were provided only for selected buildings while other entrances remained stepped.

- **Hierarchical Recognition across Disability Categories**

Observation patterns across the disability-specific sections (C–G) and the cross-disability equity indicator showed that functional visibility and usability of supports varied by disability category. Supports for learners with sensory and physical impairments were more commonly visible on site, whereas structured supports tailored to ASD and intellectual/developmental disabilities (e.g.,

PECS/picture supports, visual schedules, structured teaching materials, simplified/adapted texts, transition tools) were infrequently observed in active use and were often absent, inaccessible, or non-functional. As an observation-bounded result, this indicates uneven provision and uneven integration of supports across disability categories in routine practice.

4) Evidence from document review: EIV

- **Discursive Ambiguity: Inclusion as Moral Aspiration Rather than Explicit Entitlement**

This subtheme is reported as documentary evidence of institutional articulation, indicating that inclusive values are commonly expressed in broad terms. Still, explicit naming of SWDs, rights-based framing, and actionable specificity are limited. Inclusive language appeared most frequently in school vision, mission, and core values statements, typically framed in broad terms such as equity, access, education quality, ethical citizenship, or non-discrimination. In the illustrative case, the vision and mission similarly emphasize cultivating well-rounded, problem-solving learners and delivering quality education through stakeholder involvement and attention to local realities—commitments that can be compatible with inclusion, but which do not necessarily specify SWDs, inclusive education, or strategies for equitable access. Explicit mention of SWDs or inclusive education was observed in fewer than half of the reviewed vision and mission statements. A typical statement specified: "Our school is committed to providing quality education for all children without discrimination." While such accounts signal inclusive orientations, they rarely specify SWDs as requiring targeted support, accessibility planning, or reasonable accommodation.

Where SWDs were referenced, the prevailing language reflected a support-oriented or welfare framing rather than an explicit rights-based approach. References often emphasized assistance or care for children with special needs, with limited articulation of entitlement, reasonable accommodation, or participation as a right. Terminology was inconsistent and sometimes deficit-oriented. Within the broader national framework, inclusion is anchored through constitutional non-discrimination provisions and Ethiopia's commitments to international disability rights instruments. Against this normative expectation, school-level documents rarely positioned SWDs explicitly as rights-holders entitled to accommodations and participation on an equal basis. Instead, inclusion commonly appeared as a general value orientation rather than an operationalized rights-based commitment.

- **Normative Commitment amid Structural Dilution (EIV): Synthesis**

Inclusive values are symbolically affirmed yet structurally diluted in enactment. Respect, fairness, and the rights of SWDs retain discursive legitimacy across teacher dialogue and institutional messaging, but exam-accountability hierarchies reorder priorities, rendering accommodation professionally risky and reframing equity as sameness. Deficit framings normalize lowered expectations, while peer protection and anti-discrimination enforcement remain unevenly stabilized in routine practice. Inclusion is frequently narrowed to admission rather than anticipatory pedagogical adjustment, and institutional success metrics privilege compliance over participation and learning progression. Observed material conditions communicate dignity inconsistently, with supports unevenly integrated across disability categories, while documentary commitments lack explicit rights-based specification and distributed accountability. Collectively, these patterns depict a morally endorsed yet institutionally under-embedded value architecture in which equity circulates rhetorically but exerts fragile normative force in everyday school life.

- **ISC interpretive finding: Normatively Affirmed yet Institutionally Fragile—Conditional Enactment**

Taken together, BC and EIV indicate that ISC is normatively affirmed yet institutionally fragile. Schools visibly articulate commitments to welcome, respect, and equity; however, belonging, participation, and high expectations are weakly stabilized through predictable routines and enforceable norms. Relational membership remains contingent upon discretion and informal collaboration, while value enactment is diluted by exam-accountability pressures, sameness-based interpretations of fairness, and uneven protection practices. Inclusive culture, therefore, operates more as a moral orientation than as an institutionalized expectation—ethically resonant and discursively legitimate, yet inconsistently embedded in the structural arrangements that secure dignity, participation, and equitable learning for SWDs. Consequently, inclusive commitments are enacted conditionally: sustained when leadership emphasis, discretionary effort, and contextual flexibility align, but readily thinned under coverage, performance, and resource pressures.

4.2.3. Inclusiveness of School Policy (ISP)

Building on the cultural patterns of conditional membership and weakly institutionalized values, this section examines the formal structures intended to translate inclusion into action. Policy refers to the formal and informal rules, plans, routines, and support arrangements through which

inclusive education is expected to be implemented and governed at the school level. In this Policy section, collaboration and support are examined as rules, plans, roles, routines, and governance arrangements that make inclusion legitimate and implementable, rather than as interpersonal goodwill. This subsection synthesizes qualitative evidence on the operationalization of inclusion in school-level policy, focusing on PAI, as well as the organization of support for SWDs.

a) Policy Awareness and Implementation: Formal Recognition amid Operational Ambiguity

PAI refers to teachers' understanding of national and local inclusive education laws and policy frameworks, as well as the degree to which these are integrated into school-level documents, procedures, and established practices. It examines how inclusion is fused into guiding documents and governance, and how it is realized through equitable admission, identification, and assessment processes, in addition to accessibility standards for infrastructure, learning materials, and assistive technology. Analytically, the focus is not solely on the existence or recognition of policy, but rather on whether it serves as a practical and legitimate guide for daily school operations.

1) Evidence from FGDs: PAI

- **Policy recognition without operational guidance**

Across FGDs, teachers portrayed inclusive education policy as widely recognized in principle, yet unevenly translated into actionable, school-usable guidance. The dominant pattern was policy recognition without operational guidance: in most schools, this recognition was described as conceptual rather than procedural. Policy was experienced as a broad directive to include, rather than as actionable guidance specifying what teachers should do differently in everyday classroom situations. Teachers emphasized that practical guidance was particularly limited for learners with autism, intellectual disability, and multiple or severe impairments within overcrowded classrooms, rigid schedules, and high workload conditions. In the absence of operational guidance, teachers reported relying on personal judgment, prior experience, or informal advice from colleagues, contributing to uneven implementation across classrooms and schools.

The teachers constantly distinguished between awareness of the existence of the policy and the ability to make it operational and relevant in everyday practice. In School A, teachers pointed out that "inclusion is written in the policy," yet stated, "When the child has moderate or high

disabilities, we do not know what the policy requires from us in our classes" (Teacher FGD, School A), underlining the lack of knowledge about how to implement the policy beyond mere enrollment. Teachers in School C found the policy to be "too vague," as "it only writes that includes, but it does not say anything about how to assist a child with autism or intellectual disabilities in a class where there are many pupils" (Teacher FGD, School C), illustrating the deficiency in instructions about how to deal with real-life circumstances in the classroom. Teachers at School F expressed that simply reading the documents was not enough to put the policy into action: "They [education officials] just show us the document, but that is not enough in practice. We do not know the process of assessing the children, helping them, modifying the activities" (Teacher FGD, School F).

When policy awareness is not accompanied by operational guidance, implementation becomes discretionary and inconsistent. As a result, learners with the most intensive support needs depend on individual teacher capacity rather than predictable, school-level authorization and support. This suggests the need for school-usable policy instruments, including disability-responsive procedures, worked examples of adapted lessons and assessments, and simplified guidance that translates national commitments into routine classroom action.

- **Policy visibility with weak school-level institutionalization**

Across FGDs, teachers described policy as visible in formal texts but weakly institutionalized through clearly defined roles, routinized processes, or accountability mechanisms. In many schools, teachers reported limited collaboration with school leaders to translate inclusive policy commitments into concrete responsibilities, timelines, resourcing, and follow-up. Although inclusion frequently appeared in school vision statements, mission accounts, and annual plans, it was often framed as a generic commitment rather than operational targets linked to implementation. In daily governance, school rules and routines continued to privilege uniform pacing, silence, and written output, leaving limited official flexibility for accommodation. Consequently, policy tended to surface during planning, reporting, and supervision moments, but remained weak as a day-to-day organizing tool guiding teaching and support practices.

In School D, teachers highlighted a missing link between policy and governance: "We rarely sit with the school leaders and say, 'who will do what' for inclusion. So it stays as a general message, not a routine" (Teacher FGD, School D). In School B, teachers noted that inclusion appears in

plans but does not guide daily work: “In the vision and annual plan, inclusion is written, but in daily work it doesn’t guide us. There is no clear target or follow-up” (Teacher FGD, School B). In School K, teachers described rules that assume a “typical student” and constrain accommodation: “Many rules are made for the regular student… finishing on time, writing the same work, and keeping quiet. So when you want to adjust, it looks like you are breaking the rules” (Teacher FGD, School K). In School F, teachers underlined uneven enactment under unclear roles and follow-up: “One teacher adjusts, another teacher doesn’t, and nobody checks it” (Teacher FGD, School F).

Where school documents and leadership routines do not operationalize inclusion, policy remains symbolic, and exclusion persists through ordinary governance structures. This points to the need for explicit school-level translation, including clear role allocation, minimum accommodation expectations, routine monitoring focused on classroom support, and revised rules that normalize accommodations as standard practice rather than exceptional favors.

- **Conditional access and quiet gatekeeping**

In the absence of clearly institutionalized procedures, teachers’ accounts further revealed patterns of conditional access in which admission is formally open yet practically shaped by informal judgments about feasibility. Across several schools, teachers described families of children with severe or complex disabilities as sometimes being quietly discouraged or redirected during registration. These practices function as policy-in-practice by shaping access before any planning for instructional or support adaptations can begin. From a system-student mismatch lens, gatekeeping is better understood as a coping response to limited institutional support capacity and high accountability pressure, rather than as a simple attitudinal refusal.

In School H, teachers reported, “During enrolment, some parents are advised not to enroll because the child is seen as not manageable, and they are told to try another school” (Teacher FGD, School H). In School I, teachers similarly noted, “Some students with severe disabilities are not admitted fairly, and parents are told, ‘take the child somewhere else’” (Teacher FGD, School I). In School C, teachers framed redirection as indirect: “We don’t say no openly, but we explain our situation and suggest another school that can handle the child better” (Teacher FGD, School C). In School K, teachers described capacity-based boundary setting: “When the disability looks serious, we tell the parents we don’t have the capacity” (Teacher FGD, School K). Teachers in School H further

linked these judgments to system pressures: “Before enrolment is even finished, we already think if the child will fit with our class size and exam pressure” (Teacher FGD, School H).

Gatekeeping undermines equal access by shifting inclusion from a right to a conditional opportunity shaped by perceived manageability, class size, and performance pressures. This suggests the need for rights-consistent admission safeguards and documented procedures, such as transparent criteria, recorded decisions, and accountability mechanisms, so enrollment is not used to manage anticipated support challenges.

- **Informal identification and accommodation under unclear authorization**

Beyond access at entry, teachers described weak procedural guidance within schools for how learners are identified and how accommodations are authorized. Across most FGDs, disability identification was described as largely informal, relying on teacher observation, impressions, and family reports rather than consistent tools and documented procedures. Teachers also described uncertainty about which accommodations are legitimate under centralized curriculum pacing and uniform assessment expectations. This uncertainty made adjustments cautious, weakly documented, and dependent on individual discretion; teachers reported feeling professionally exposed when deviating from standardized routines.

In School A, teachers noted, “We mostly identify it [a child with a disability] by what we observe… and what the homeroom teacher reports” (Teacher FGD, School A). In School C, teachers stated, “Without screening tools, we just depend on observation” (Teacher FGD, School C). In School I, teachers linked uncertainty around accommodation to accountability pressures: “When you change the assessment modality, later someone can ask you, ‘Is it even allowed?’” (Teacher FGD, School I). In School F, teachers summarized the result as individualized decision-making: “We don’t have a clear way to assess learning needs, so each of us teachers decides based on experience” (Teacher FGD, School F). When identification and accommodation remain informal, support becomes late, inconsistent, and difficult to defend professionally. Teachers’ accounts suggest the need for feasible screening and documentation pathways, alongside explicit school-approved guidance on reasonable accommodations and adapted assessment, so teachers can act with legitimacy rather than hesitation.

- **Inaccessibility as structural exclusion**

Across FGDs, teachers emphasized that inclusive policy collapses in practice when basic accessibility conditions are absent. They described shortages of accessible learning materials and assistive technologies (e.g., Braille and large-print materials, sign-language support), alongside inaccessible physical environments (gates, paths, classrooms, toilets, playgrounds). Teachers also noted measures that are symbolic rather than functional (e.g., ramps too steep for everyday use), indicating compliance-oriented adaptations that do not secure independent access. Collectively, these barriers restrict participation not only in learning activities but also in social spaces where membership and peer relationships are formed.

In School E, teachers explained, "Without Braille materials and someone who can support sign language, children may be in the class, but access is not real" (Teacher FGD, School E). In School B, teachers linked physical barriers to the message communicated by the school: "Even the main gate is hard for a learner using a wheelchair… 'you can come to school, but you cannot move freely or learn properly'" (Teacher FGD, School B). In School I, teachers noted performative infrastructure: "We have a ramp, but it is too steep… for inspection, not for everyday use" (Teacher FGD, School I). In School K, teachers described enrolment without usable access: "Inside the compound, the path, the toilet, even the classroom setup makes it difficult, so the children sit and watch more than participate" (Teacher FGD, School K). In School J, teachers described how resource gaps force a single-mode pedagogy: "We don't have large-print, Braille, or assistive materials… the child is present without benefiting" (Teacher FGD, School J).

Without accessible environments and assistive supports, policy commitments cannot materialize in participation and learning. This suggests that policy implementation should be assessed through accessibility outcomes and resource provision—not enrollment numbers alone—and that minimum accessibility actions should be integrated into school planning, budgeting, and routine monitoring as rights-based learning conditions.

Holds under pressure: In a few schools, policy became more actionable where teachers translated broad expectations into simple, school-level routines that clarified authorization and reduced uncertainty, including early-year observation and informal assessment within a shared timeframe, basic discussion of support needs accompanying placement, continuity through repeated follow-

up, and periodic consultation with SNE educators where available. These micro-routines reduced discretion and hesitation by making policy expectations usable for everyday decisions about identification, accommodation, and follow-up under workload and coverage pressures. The implication is that policy resilience depends less on policy visibility and more on routinized translation tools—feasible screening and documentation pathways, explicit guidance on reasonable accommodations, and regular review points that normalize accommodation as legitimate practice rather than exceptional discretion.

To corroborate and extend teachers' accounts by clarifying coordination, authority, and implementation constraints, evidence from KIIs indicates that policy familiarity is common, but conversion into step-by-step procedures, especially for assessment accommodation, is weak.

2) Evidence from KIIs: PAI

- **Partial and Fragmented Procedural Implementation**

Across interviews, coordinators reported familiarity with inclusive education policy, yet reliably described weak translation of policy principles into school-level procedures, particularly regarding accommodations and assessment. As one coordinator noted, "We know the policy direction, but it is not converted into step-by-step procedures for teachers, especially assessment accommodation" (IERC coordinator, School D). Inclusion was often referenced in school plans, but without clearly assigned responsibilities, timelines, or resources. "In the school plan, inclusion is mentioned, but the plan doesn't specify what each unit must do and with what resources" (IERC coordinator, School F). Another coordinator similarly observed that inclusion appeared as a single line in planning documents without an operational plan behind it (IERC coordinator, School G). These accounts specify localized recognition without coherent procedural integration.

- **Structural Ambiguity in Assessment and Accommodation Implementation**

Assessment and examination accommodations emerged as a critical site of ambiguity and inconsistency. Admission processes were described as flexible, yet exam accommodations were frequently improvised and dependent on availability rather than standardized routines. "Admission is usually flexible, but exam accommodation is where we face the biggest confusion" (IERC coordinator, School H). Another coordinator emphasized last-minute arrangements: "For exams, always we face problems. We find a reader at the last minute. There is no standardized procedure,

it depends on who is available" (IERC coordinator, School D). Policy enactment was therefore portrayed as case-by-case and discretionary rather than institutionalized, reflecting implementation fragility rather than procedural stabilization.

To verify these accounts through practice-facing indicators of enactment and usability, evidence from observations indicates that accessibility is most often partial and route-/assistance-dependent across school spaces.

3) Evidence from observations: PAI

- **Partial and Fragmented Accessibility Implementation**

Based on the observations, it became clear that physical accessibility was mostly partial accessibility, which indicated that minimal alterations were made rather than incorporating holistic access measures throughout the whole school environment. Schools' entryways normally seemed to have been spacious enough, but access was significantly restricted because of uneven entry points, heavy or bulky gate structures, and obstructions within the school immediately after the entry point. The presence of ramps in most schools failed to ensure sufficient access because they were very steep, lacked railings, were dilapidated, or were available only to specific structures while leaving others inaccessible owing to steps.

- **Structural Inaccessibility as Implementation Failure**

In multiple settings, the circulation paths faced challenges like damaged paths, exposed drains, steep gradients, and other obstacles, making it difficult for students with mobility difficulties to navigate safely. Sensory adaptations were not common, and lighting and sound control were hardly considered. Common areas provided more evidence of inadequate implementation: water sources were accessible only partially; play areas and sports grounds were inaccessible most of the time; library and laboratory spaces had entrance stairs with no provisions for alternatives; and furniture did not cater to most SWDs. Despite the availability of IERC classrooms in all schools, accessibility was a challenge since stairs posed a difficulty in most instances.

To examine institutional traces of formal intent, proceduralization, and accountability, evidence from document review indicates that inconsistent reference to national frameworks and limited conversion into roles, procedures, and accountability mechanisms.

4) Evidence from document review: PAI

- **Declarative Policy Referencing without Operational Translation**

This subtheme is reported as documentary evidence of institutional articulation, indicating inconsistent reference to national inclusive education frameworks and limited translation of those references into school-level procedures, roles, and accountability mechanisms. References to national policies and strategies, such as Ethiopia's SNIE Strategy or Ministry of Education directives, were inconsistently documented. Some annual plans and reports included broad references to government priorities or sector programs, while others contained no explicit linkage to national inclusive education frameworks. Where references were present, they were largely declarative and were not accompanied by school-level translation into defined procedures, roles, accountability mechanisms, or implementation tools. In the illustrative case, identity documents align strongly with broad educational quality goals; however, they do not, by their nature, demonstrate how inclusive education policy commitments are translated into concrete school-level procedures for SWDs. This pattern reflects policy visibility without procedural embedding.

- **Standardized Reporting without Contextual Operationalization**

Consistent with this pattern, several schools used standardized reporting formats that list categories of student impairment regardless of the specific SWD profile in a given school. The uniformity of these formats suggests limited contextual adaptation of reporting tools to school-level needs and provides further indication that national frameworks are not consistently operationalized into tailored school documentation. This pattern is consistent with broader system-level concerns regarding weakly functional data and reporting systems on children with disabilities, where documentation may not support follow-up, planning, and decision-making. The documentation structure, therefore, reinforces weak operational linkage between national policy intent and school-level implementation, clarifying why implementation remains fragile.

- **Formal Recognition amid Operational Ambiguity (PAI): Synthesis**

Across qualitative sources, inclusive policy frameworks are widely recognized and visible within schools, yet weakly translated into operational practice. FGD evidence shows that teachers acknowledge policy commitments but lack clear, school-usable guidance for identification, accommodation, and follow-up, rendering implementation discretionary and, at times, susceptible to quiet gatekeeping. KIIs similarly indicate familiarity with national frameworks without

conversion into defined roles, procedures, or assessment accommodation protocols. Observation findings reveal partial and route-/assistance-dependent accessibility, while document review demonstrates declarative policy referencing and standardized reporting formats without contextual procedural embedding. Collectively, these strands converge on a pattern of formal recognition without institutionalized translation: inclusion remains procedurally ambiguous, unevenly authorized, and fragmented in everyday enactment.

b) Organizing Support (OS): Structural Provision amid Systemic Fragmentation

OS concerns how schools coordinate, deliver, and sustain support systems for SWDs. It includes the existence and functionality of inclusion teams and coordination pathways; the development, enactment, and review of IEPs; access to ongoing professional support and coaching; routinized collaboration among classroom teachers, SNE personnel, and parents; and the resourcing and improvement cycles that enable support services to develop over time. Analytically, the focus is on whether support operates as a systematized school responsibility rather than an individualized, discretionary response. In this OS subsection, 'collaboration' refers to formal system architecture, including team meetings, case review routines, shared follow-up, IEP processes, and role clarity, not simply positive relationships among staff.

1) Evidence from FGDs: OS

- **Coordination exists in name, not in practice**

Across FGDs, teachers described coordination structures as weak or largely symbolic, leaving support fragmented and accountability diffuse. In most schools, coordinated pathways for organizing support were portrayed as absent, irregular, or activated primarily for compliance purposes (inspection, reporting, file checking) rather than sustained planning, case follow-up, and service improvement. Consequently, support varied by teacher, grade level, and staff availability, and often weakened during workload peaks or staff turnover. Inclusion was therefore maintained more through individual commitment than institutionalized routines.

In School A, teachers stated, "Support is not organized as a system. It depends on which teacher is committed" (Teacher FGD, School A). In School B, teachers emphasized the absence of organized planning and follow-up: "There is no team that plans or follows cases… no one checks

what was done later" (Teacher FGD, School B). In School E, teachers noted, "We have an inclusion team by name, but it doesn't sit to plan and review" (Teacher FGD, School E). In School L, teachers described diffuse accountability: "If the child is not improving, nobody asks, and it becomes the teacher's burden" (Teacher FGD, School L). Fragmented coordination institutionalizes inequity because access to support depends on individual effort rather than predictable school mechanisms. Teachers' accounts suggest the need for minimum functional conditions: an empowered inclusion team with defined roles, routine case review, and monitoring oriented toward participation and learning outcomes, not documentary presence alone.

- **Individualized planning exists in name, not in classroom practice**

Teachers described IEPs as rare, paper-driven, or detached from classroom realities. In many schools, IEPs were reported as rare, inconsistently prepared, or produced by a small group (often SNE staff) with minimal involvement of other teachers. Where IEPs existed, implementation and monitoring were described as weak, with limited continuity across teachers and terms. As a result, support remained generic, and learners were expected to adjust to the mainstream system rather than the system being adapted to reduce participation barriers and support progression.

In School A, teachers noted that IEPs were treated as administrative paperwork rather than living tools: "Sometimes special needs teachers write something and we just sign… then it goes to the file. Nobody comes back to check what we did with it" (Teacher FGD, School A). In School E, teachers stated that plans were not discussed in meetings and lacked follow-up: "Each teacher does what they can" (Teacher FGD, School E). In School H, teachers linked the absence of IEP guidance to generic support: "We give the same kind of help to many students" (Teacher FGD, School H). In School L, teachers highlighted broken continuity: "When the teacher changes, the support starts from zero… the child is expected to fit the class" (Teacher FGD, School L). When IEP is absent or not enacted, learners are managed rather than supported toward participation and progression. The findings imply the need for a pragmatic IEP model feasible in crowded contexts: a small number of prioritized goals, explicit in-class strategies, shared ownership across mainstream and SNE staff, and routine review focused on enactment and effects rather than plan completion alone.

- **Unreliable support systems drive reactive responses**

Across FGDs, teachers reported that the human infrastructure and collaboration routines required to sustain support are unreliable, making assistance crisis-driven rather than planned. In most schools, teachers described insufficient training and coaching, limited specialist support (including sign-language interpretation), and weak counseling/referral pathways for psychosocial distress. Collaboration with parents and specialists was often problem-triggered rather than routine, leaving teachers to rely on trial-and-error and short-term coping responses. In School A, teachers stated, "There is no regular professional support… we just try things day by day" (Teacher FGD, School A). In School B, teachers linked limited training to crisis-oriented responses for learners with severe autism, noting that support can drift toward punitive reactions when practical alternatives are unavailable (Teacher FGD, School B). In School E, teachers said, "We call parents when the issue is already big… we don't have a routine meeting to plan and follow up" (Teacher FGD, School E). In School J, teachers reported, "We don't know sign language, and the interpreter is not there regularly" (Teacher FGD, School J).

When professional learning, specialist inputs, and collaboration routines are unreliable, support becomes reactive and may drift toward exclusionary management. The findings point to sustained, practice-oriented professional development linked to coaching; dependable specialist availability (including communication access); basic psychosocial referral pathways; and structured collaboration routines that enable early planning.

- **Pull-out support replaces classroom participation**

Teachers described resource rooms and pull-out arrangements as the most visible form of support. While often valued, in many schools withdrawal became the default architecture of assistance, producing location-based support rather than embedded classroom participation. Teachers reported limited joint planning between mainstream and SNE staff, weak linkage between pull-out activities and classroom instruction, and minimal adaptation of mainstream routines. Over time, responsibility was "handed over," leaving reintegration uncertain and classroom participation fragile. In School L, teachers stated, "When we say support, it usually means the child goes to the resource room" (Teacher FGD, School L). In School B, teachers described minimal classroom adjustment: "The lesson continues at the same pace and with the same activity" (Teacher FGD, School B). In School F, teachers reported, "Once the children are withdrawn from the classroom,

it feels like the support becomes someone else's responsibility" (Teacher FGD, School F). In School K, teachers noted, "When they [children with disabilities] return, they are expected to catch up on their own" (Teacher FGD, School K).

A withdrawal-centered model may stabilize support outside the classroom while leaving participation inside the classroom weak. Teachers' accounts suggest shifting from "taking students out" toward "making classrooms workable," through shared planning, targeted in-class supports, and time-limited pull-out linked explicitly to reintegration.

- **Scarce and uneven support across disability types**

Across FGDs, teachers reported weak resourcing and improvement cycles, producing scarcity-filtered and uneven support across disability types. In most schools, inclusion support was described as underfunded, with limited allocation for assistive materials, adapted resources, training, and sustained services. Where resources existed, they were often tied to episodic fundraising, NGO support, or donations, making provision fragile. Teachers also described uneven prioritization across disability categories, creating a hierarchy shaped by visibility, perceived manageability, and resource availability rather than participation needs. In School G, teachers stated, "Inclusion is not budgeted as a priority… Braille materials and sign-language support are not enough there" (Teacher FGD, School G). In School A, teachers described dependence on external actors: "When an NGO comes, we get something, and when they stop, it stops" (Teacher FGD, School A). In School L, teachers noted, "Most support goes to visible disabilities… [students with] autism or intellectual disability get very little" (Teacher FGD, School L).

When resourcing and review cycles are weak, support becomes episodic and selective, reinforcing inequity across learners and schools. The findings suggest protected resourcing for core supports, routine service review using feedback and outcomes, and needs-based allocation mechanisms so supports follow participation barriers rather than disability labels.

Holds under pressure: In a few schools, policy implementation held more reliably when core support functions were anchored in identifiable roles and repeated routines, such as early identification linked to shared review points, modest consultation between SNE and classroom teachers, and basic coordination with external partners (e.g., health services for screening).

Targeted skill-building, including introductory sign language training, and partner-supported provision further stabilized services where internal resources were limited. These micro-routines reduced discretion and uncertainty by clarifying who does what, when actions occur, and how follow-up is sustained under workload peaks and staff turnover. The implication is that implementation resilience depends less on expansive reform and more on small, structured operational steps—clear role definition, agreed review cycles, routine consultation, and classroom-focused monitoring—that render support predictable and less dependent on individual initiative.

To support and extend teachers' accounts by clarifying coordination, authority, and execution constraints, evidence from KIIs shows that committees, focal persons, and IEP tools often operate episodically and compliance-oriented rather than as routine coordination mechanisms.

2) Evidence from KIIs: OS

- **Formal Structures with Episodic Activation**

Coordinators reported that school-based support structures, such as committees, focal persons, and referral linkages, were formally established in many schools, but their functionality was widely questioned. Several accounts suggested that these mechanisms operate episodically, becoming active mainly in response to external scrutiny or acute problems rather than serving as routine platforms for coordination and follow-up. As one coordinator remarked, "We have various committee on paper. Meetings happen when there is a crisis, not as a routine support system" (IERC coordinator, School B). Another similarly noted, "We have an inclusion committees that meets only when the woreda office is coming for inspection" (IERC coordinator, School L). Referral pathways and coordination with woreda/sub-city offices were described as important in principle, yet uneven in practice, particularly with respect to follow-up and responsiveness: "Our referral pathway exists, but the response time and follow-up depend on who is available at the woreda level" (IERC coordinator, School E).

- **Role Ambiguity and Constrained Authority**

Within these arrangements, coordinators highlighted role ambiguity and limited authority, which constrained their capacity to institutionalize support as a school-wide system. As one participant explained, "Sometimes roles overlap; for example, teachers expect the centre to do everything, but we also lack authority and budget" (IERC coordinator, School J). Structural designation did not

automatically translate into empowered implementation, and constrained authority limited coordinators' ability to stabilize support mechanisms.

- **Compliance-Oriented Planning and Case-Based Enactment**

Formal tools intended to operationalize support, particularly IEP processes, were widely portrayed as compliance-oriented documentation rather than instruments shaping instruction and monitoring learner progress. One coordinator noted, "We fill the IEP forms because the checklist requires it, but it does not connect to the classroom. The teacher has 50 other students; they do not use it" (IERC coordinator, School J). Another summarized, "It is a document for the file, not a plan for the child." IEPs were described as inconsistently applied and difficult to sustain as practical tools in everyday teaching, with challenges related to regular review, teacher engagement, and classroom feasibility. "We try to prepare IEPs, but regular review is difficult. It becomes a file rather than a classroom tool" (IERC coordinator, School G). Support enactment was therefore often situational and case-based rather than standardized and system-driven.

To verify these accounts through practice-facing indicators of enactment and usability, evidence from observations indicates that IERC rooms exist, but routine usability of materials and assistive technologies is commonly constrained by access restrictions and functionality gaps.

3) Evidence from observations: OS

- **Resource Presence without Functional Usability**

All schools had an identified IERC/resource center space; however, access to IERC materials and equipment most commonly reflected limited routine usability. Constraints were driven primarily by access restrictions, functionality gaps, and staff availability rather than the absence of a designated room. Materials were often present but constrained by locked storage, restricted access protocols, damaged condition, and/or outdated relevance, limiting timely access during learning time and reducing the likelihood that resources could be mobilized responsively to meet classroom needs. Adaptation of learning materials was generally limited and, where observed, was primarily teacher-initiated and ad hoc rather than systematically supported through the IERC. Assistive technologies were sometimes observed on site but were frequently non-functional, incomplete, lacking essential components, or unused due to limited training and ongoing technical support. IERC coordinators, often carrying additional duties, had limited availability for regular support.

- **Weak Institutionalization of Safety and Monitoring Systems**

Observational evidence indicated that disability-responsive safety arrangements were not consistently observable within routine school safety systems. Many schools lacked verifiable provisions such as clearly accessible routes for urgent movement, designated support arrangements for assisting SWDs, or simple and visible emergency procedures. Feedback mechanisms were occasionally present but showed limited evidence of routine use or follow-up action. Although IEPs were sometimes available, their linkage to day-to-day instruction and progress monitoring was not clearly observable, suggesting limited routine integration of individualized planning into classroom implementation and accountability structures. Overall, observable practice reflected weak embedding of support architecture into institutionalized school systems.

To examine institutional traces of formal intent, proceduralization, and accountability, evidence from document review indicates that focal persons are named, but operational procedures, coordination protocols, and resourced follow-through mechanisms are weakly documented.

4) Evidence from document review: OS

- **Structural Designation without Procedural Embedding**

This subtheme is reported as documented evidence of institutional articulation, signifying that some support structures are named (e.g., focal persons), but formal procedures, coordination protocols, and resourced execution mechanisms are weakly documented. Formal procedures for admission, assessment, and accommodation of SWDs were largely absent from school rules, guidelines, and planning documents. While many schools recorded SWD numbers, often segregated by impairment type, grade level, age, and/or parents contact, explicit procedures outlining assessment processes, accommodation measures, referral pathways, or decision-making duties were rarely recorded. Across the reviewed records, enrolment of SWDs was concentrated in a limited range of impairment categories. In most schools, documentation reflected enrolment within only one or two impairment groups. This pattern may suggest that admission is shaped by local capacity and available support arrangements; however, such apparent selectivity was not formalized through explicit written admission criteria or documented placement procedures.

Only a small number of schools (3 schools) included brief references to accommodating learners with special needs, and these references lacked operational detail (e.g., defined roles, timelines,

criteria, or documented accommodation processes). Even where values statements emphasized problem-solving, ethical citizenship, and service quality, documents rarely specified how such principles were applied systematically to SWD-specific educational barriers (e.g., through documented needs assessment processes, accommodation plans, or intervention tracking). Evidence of coordination mechanisms was uneven. A SNE teacher was assigned as a focal person in all 12 schools; however, documentation supporting coordination, such as committee TORs, meeting minutes, and formal coordination protocols, was generally incomplete or unavailable. IEP documentation was similarly weak: although a few schools possessed generic IEP templates, these were not integrated into school-level planning and curriculum adaptation processes, nor translated into lesson plans, instructional strategies, or progress monitoring.

- **Monitoring and Professional Development without Systemic Integration**

Capacity-building and professional development mechanisms to support teachers' use of inclusive strategies were weakly institutionalized. Records of teacher training related to inclusive education were inconsistently maintained; where training was documented, it typically took the form of one-off, event-based workshops rather than a planned professional development cycle with defined objectives, follow-up, coaching arrangements, and accountability mechanisms. In a small number of schools, documentation indicated staff participation in sign-language training; however, documented pathways for classroom application (e.g., coaching logs, execution plans, or monitoring tools) were limited. Largely, training records rarely specified content related to tasks adaptation, disability-specific strategies, or inclusive pedagogy, and they seldom documented how training was expected to be translated into routine classroom practice and monitored over time.

Annual school improvement or actions plans rarely referenced activities related to SNE or inclusion (e.g., awareness raising or procurement of resources). However, these references were rarely accompanied by dedicated budget allocations, clearly assigned responsibilities, and measurable indicators. No school documented a specific budget line earmarked for inclusive education or SWD-related support. Formal monitoring and reporting mechanisms, central to accountability and follow-up, were also weakly institutionalized. School plans and reports usually tracked SWD enrolment but rarely extended to systematic monitoring of facility accommodation, participation, accessibility issues, or learning progress. Where reporting occurred, it tended to be descriptive (listing numbers or tasks done) rather than analytical (assessing persistent gaps, causal

factors, and corrective actions). Evidence of feedback loops, like recorded review meetings, corrective actions, or revisions to subsequent plans based on tracking results, was very limited.

- **Structural Provision amid Systemic Fragmentation (OS): Synthesis**

Across qualitative sources, support structures for SWDs are formally designated but weakly integrated into routine school practice. FGD evidence shows that coordination mechanisms, IEP processes, and collaboration routines exist largely in name, operating episodically and leaving accountability diffuse. KIIs reinforce this pattern, describing committees, focal persons, and referral pathways that are structurally established yet constrained by role ambiguity, limited authority, and compliance-oriented enactment. Observation findings reveal resource presence without reliable usability, with assistive materials, safety arrangements, and instructional adaptations inconsistently embedded in daily practice. Document review further indicates structural designation without procedural depth, event-based training without sustained professionalization, and monitoring focused on enrolment counts rather than participation and learning progression. Collectively, these strands converge on systemic fragmentation: support remains formally provided but weakly stabilized as an institutionalized, predictable school responsibility, rendering assistance contingent rather than coordinated and sustained.

- **ISP Interpretive Finding: Formally Articulated yet Weakly Institutionalized—Fragmented Policy-to-Practice Translation**

Taken together, PAI and OS indicate that ISP is formally articulated yet weakly institutionalized within daily school systems. Policy promises are visible and recognized across documents and discourse; but, their translation into operational procedures, coordinated support systems, and routinized accountability means remains structurally weak and incoherently stabilized. Procedural ambiguity in identification, accommodation, and assessment converges with fragmented support organization, episodic committee activation, compliance-oriented planning, and weakly integrated monitoring systems. Although structural provisions—focal persons, IEP templates, resource rooms, and referral pathways—are structurally designated yet weakly institutionalized within routine practice, they lack the procedural depth, role clarity, resourcing continuity, and instructional integration essential for stable enactment. So, policy functions more as a declarative mandate than as governing infrastructure: authorized in principle yet systematically under-

embedded in practice, leaving inclusion dependent on local discretion, episodic coordination, and contingent resource availability rather than predictable, institutionalized mechanisms.

4.2.4. Inclusive School Practices (ISPr)

The analysis now turns from policy intent to enactment, synthesizing evidence on the concrete teaching, assessment, and resourcing arrangements through which inclusion is realized—or constrained—in daily school life. Practices refer to the concrete teaching, assessment, and resourcing arrangements through which inclusion is enacted (or constrained) in classrooms and across school spaces. This subsection synthesizes qualitative evidence on inclusion in everyday practice, focusing on teaching–learning practices and resource provision for SWDs.

a) Teaching–Learning practices: Systemic Constraint and the Dominance of Coping Pedagogy

TL practices examine how teachers design and enact classroom instruction so that SWDs participate and make learning progress. It includes lesson planning and adaptation; flexible grouping and classroom organization; collaboration or co-teaching with colleagues or specialists; structured scaffolding and explicit instruction; multimodal access aligned with UDL principles; peer-assisted learning; varied and fair assessment approaches; reasonable accommodations in classroom and formal assessments; and feedback practices that sustain confidence and participation. Analytically, TL focuses on what is routinely enacted inside classrooms and school spaces, as distinct from PAI and the Organization of OS.

1) Evidence from FGDs: TL practices

- **Coverage-led planning and reactive inclusion, with weak instructional collaboration.**

Across FGDs, teachers described inclusive teaching as shaped primarily by syllabus coverage, inspection expectations, and fixed pacing schedules. In most schools, adaptations for SWDs were reported as being introduced after learning difficulties became visible—or when external monitoring heightened attention to inclusion—rather than being embedded as anticipatory lesson design. Collaboration for inclusive instruction was similarly limited: co-planning with colleagues or SNE teachers was irregular, rarely scheduled, and insufficiently institutionalized. As a result,

inclusive strategies seldom matured into shared routines; instructional support often "resets" across teachers and grade levels, producing uneven access for SWDs over time.

Teachers across schools regularly locate lesson planning within coverage imperatives. In School A, one teacher explained, "Most lessons I follow the textbook coverage so we don't fall behind. I only change the task when I see the student struggling… but I don't plan those supports ahead of time, and we don't plan them together" (Teacher FGD, School A). In School E, a teacher similarly stated, "Our pacing is for coverage, so I first teach the whole class the same way… then I shift and give fewer questions and extra time, but it happens in the middle of the lesson, not from the start" (Teacher FGD, School E). In School C, the absence of collective planning was emphasized: "We rarely sit and plan inclusive teaching as a team. Each teacher prepares alone…" (Teacher FGD, School C). In School I, teachers stressed discontinuity across grades: "Support depends on the teacher, not a routine… when students move to another teacher or grade, those same supports may stop because we don't agree and plan them together" (Teacher FGD, School I).

When planning remains coverage-driven and reactive, instructional access depends on individual initiative and on whether difficulties are detected early enough to trigger adjustments. The accounts point to the need for built-in adaptation prompts within routine lesson planning, short but regular co-planning routines with colleagues and available support staff, and practice-based coaching that normalizes planning for participation and checking understanding as part of everyday preparation—not as inspection- or crisis-driven responses.

- **Differentiation constrained; simplification and management substitute for scaffolding**

Across FGDs, teachers reported that differentiation is limited and frequently collapses into simplification (reduced quantity or easier tasks) or behavior-focused management rather than scaffolded teaching that preserves learning goals while varying access. Where adaptation occurs, it often takes the form of repeating explanations or reducing written work, rather than using structured supports (e.g., guided steps, prompts, models, simplified task complexity) that build competence. For learners with intellectual disabilities, simplified worksheets were described as common; but, teachers noted that this often separates learners from shared content rather than enabling stepwise participation. For learners with autism, the absence of predictable routines and

alternative response options was described as shifting classroom practice toward manageability and control rather than instructional design for engagement and understanding.

At School B, one teacher remarked: "Most days, my differentiation is just redoing over and over or lessening the amount of work… fewer questions or less writing, but it is not a step-by-step process" (Teacher FGD, School B). At School E, there appeared to be a parallel view regarding differentiation rather than an inclusive one, where "I have normally prepared an easier worksheet… and the student will work individually. It keeps them occupied, but they don't actually learn what the others learn." (Teacher FGD, School E). At School C, one of the teachers said that, with an autistic learner, "much of the time is spent in settling down, and I have ended up managing behaviors rather than being able to teach effectively" (Teacher FGD, School C). In School D, one of the teachers mentioned the limitation of testing for knowledge: "Without… the alternative modes of assessment such as pointing, matching and verbal responses, then the children… do not show their understanding of the topic" (Teacher FGD, School D).

When differentiation collapses into simplification without scaffolding, exclusion is reproduced in the classroom by narrowed tasks, low-challenge routines, and management-oriented responses. The findings indicate a need for feasible scaffolding strategies—tiered tasks aligned to shared learning goals, predictable routines, structured prompts, and alternative response options—so SWDs can involve in shared learning rather than diverted into separate, low-expectation work.

- **Weak participation structures; peer support as coping rather than pedagogy**

Participation structures were hampered by such constraints as fixed seating, overcrowding, and poor communication skills of the learners. Flexible grouping, which was sometimes hard to adapt in most schools, made it impossible for interactive teaching and learning, and changing of the participants' roles. Peer tutoring, which was common because it was easily accessible, was viewed as informal and unstructured since it relied on factors like friendship among the learners. It also gave rise to learners being called "slow" because they were not willing to help each other, hence reducing their chances of interacting.

In School B, a teacher stated, "Peer support happens by chance, today… helped, tomorrow… ignored—because we don't have a clear system for it" (Teacher FGD, School B). In School D, one

teacher explained, “Because desks are fixed and space is tight, group work is not really possible; it works only for those who can move and communicate easily” (Teacher FGD, School D). In School K, peer support was described as a pragmatic response to scale: “I pair students with disabilities with a patient peer… because I can’t reach everyone” (Teacher FGD, School K). In School A, teachers recognized the status risk: “Sometimes the same students are always put in the ‘slow’ group” (Teacher FGD, School A). When grouping and peer assistance remain informal, participation becomes unpredictable and can reinforce dependency or stigma. The accounts suggest maintaining peer-assisted learning as a deliberate instructional strategy through clear roles, peer rotation, brief teacher guidance, and simple monitoring—alongside grouping routines that are workable within crowded classroom conditions.

- **Constrained multimodal access; UDL remains aspirational**

Across FGDs, teachers described limited materials, limited training, and weak accessibility supports as key barriers to offering multiple ways for learners to access content and demonstrate learning. In most schools, classroom participation was described as dominated by listening, copying from the board, and choral response. Teachers emphasized that learners with sensory impairments are especially disadvantaged when accessible formats and communication supports are absent, creating “presence without access.” Under these conditions, UDL was described as an ideal rather than a routinized practice.

In School A, a teacher explained, “Blind students depend on listening… and deaf students watch my mouth because there is no sign support… participation is very limited” (Teacher FGD, School A). In School F, a teacher stated, “When we don’t have pictures, objects, or any teaching aids, we go back to one method… talk and copying” (Teacher FGD, School F). In School D, teachers pointed to the absence of alternative response options: “Without other ways to answer like pointing, matching… the students cannot show understanding” (Teacher FGD, School D). Where multimodal access is constrained, inclusion becomes fragile for learners who require alternative formats and communication routes. The findings point to low-cost multimodal routines, including simple visuals and real objects, stepwise demonstrations, oral checking, and alternative response modes, that can be embedded in everyday teaching even in resource-constrained classrooms.

- **Assessment as gatekeeping: written dominance and weak accommodation legitimacy**

Teachers reported that assessment and feedback often operate as gatekeeping through written-test dominance, contested accommodations, and weak formative support. In many schools, assessment was described as primarily written tests under uniform conditions, with limited alternative routes (oral, practical, performance-based, or project work). Accommodations were reported as inconsistent and sometimes challenged as "favoritism," discouraging teachers from adjusting time, format, or response modes. Under exam pressure, feedback was described as narrowing toward pace control ("finish," "hurry up," "be quiet") rather than guidance that supports learning progress. Teachers also reported that modifying assessments can feel professionally risky under standardization expectations.

In School C, a teacher stated, "We know oral or practical assessment can show learning, but we still depend on written tests, and that blocks many students" (Teacher FGD, School C). In School I, teachers described concerns about perceived "favoritism": "When we give extra time or change the way of answering, some say it is favoritism" (Teacher FGD, School I). In School A, teachers emphasized inequity for learners with sensory impairments under high-stakes testing: "When exams decide everything, and there is no real accommodation, it cannot be fair for blind and deaf students" (Teacher FGD, School A). In School J, a teacher explained, "If I modify the test, I fear it will be rejected as not standard" (Teacher FGD, School J). When assessment and feedback remain inaccessible, and accommodations lack legitimacy, inclusion collapses at the point where progression is decided. The findings indicate the need for clear accommodation guidance aligned with marking practices, feasible alternative assessment options, and manageable formative feedback routines that protect equity while maintaining academic standards.

Holds under pressure: TL practices were reported to hold more consistently under pressure when learner needs were identified early and translated into shared, repeatable classroom micro-routines. Teachers described early-year assessment and follow-up processes that informed practical instructional decisions and clarified "what to do next," resulting in agreed strategies such as strategic seating arrangements, guided peer support combined with oral checking, predictable classroom routines, and alternative response options including pointing, matching, and oral answers. These structured micro-routines reduced reliance on last-minute improvisation and enabled adaptations to be enacted consistently within the constraints of coverage-driven pacing

and large class sizes, thereby stabilizing participation for SWDs. The implication is that short, regular co-planning and check-in routines, alongside practical adaptation prompts embedded in lesson preparation, should be institutionalized so that participation supports become routinized elements of classroom practice and are revisited over time rather than activated episodically in response to inspection or crisis.

To corroborate and extend teachers' accounts by clarifying coordination, authority, and implementation constraints, evidence from KIIs indicates that adaptation is typically ad hoc under limited coaching time and sporadic professional development.

2) Evidence from KIIs: TL practices

- **Structurally Constrained Coaching and the Add-On Coordination Model**

Across interviews, coordinators reported contributing to inclusive teaching and assessment mainly through informal coaching, lesson modelling, and the sharing of practical ideas and materials. However, they emphasized that this support rarely becomes systematic because the coordinator role is frequently treated as an additional assignment, leaving limited time for sustained classroom-based follow-up amid competing workloads. As one coordinator stated, "I am supposed to model lessons, but I am assigned to teach full classes myself. My role as a coordinator is an add-on, not my main duty" (IERC coordinator, School I). In this context, instructional and assessment adaptations were commonly described as improvised and contingent on individual teacher initiative rather than embedded as routine pedagogical practice. Coordinators further noted that teachers frequently requested implementable strategies, yet routine coaching mechanisms were insufficient: "Teachers ask for practical strategies, but we don't have enough training or time to coach them classroom by classroom" (IERC coordinator, School L).

- **Ad Hoc Adaptation and the Exceptionalization of Effective Practice**

Despite the above difficulties, however, coordinators suggested that low-cost and relational accommodations are more likely to become effective interventions. These included such accommodations as seating students differently, providing instructions in a simplified manner, and peer mediation for learning purposes. For instance, a coordinator at School I indicated that she assists teachers mostly through making suggestions in terms of simple modifications such as "where the student should sit, how instructions should be provided, how peers can help" (IERC

coordinator, School I). At the same time, another IERC coordinator described one example of successful practices as well as challenges: “One success I have observed is that teachers use consistent peer-assisted learning. One challenge is addressing autism without qualified staff members” (IERC coordinator, School X). Thus, successful cases of accommodations were treated more often as exceptions rather than normal practice.

- **Practice–Capacity Gaps in Professional Development and Pedagogical Support**

Professional development was also portrayed as sporadic and insufficiently practice-oriented, with persistent gaps in disability-specific pedagogy, assistive technology use, differentiated instruction, and accessible assessment. One coordinator observed, “Most training is general; teachers need disability-specific strategies and practical classroom techniques” (IERC coordinator, School G). Another emphasized that teachers sought training that directly enables classroom action rather than broad sensitization: “Teachers ask for training that is directly usable, how to adapt assessment, not only awareness sessions” (IERC coordinator, School A).

To verify these accounts through practice-facing indicators of enactment and usability, evidence from observations indicates that assistive resources are rarely in routine classroom use, and UDL-aligned features are generally not evident.

3) Evidence from observations: TL practices

- **Resource Presence without Systematic Pedagogical Integration**

Across classrooms and support spaces, the overall pattern indicated that the presence of resources did not reliably translate into routine instructional use or sustained learner access. Assistive and inclusive education resources were rarely observed in active classroom use; where use occurred, it was typically sporadic and localized rather than embedded in everyday teaching practice. Teacher competence in using assistive resources and disability-responsive strategies appeared limited, with few indications of systematic application or confident adaptation during instruction. Independent student use of assistive materials was uncommon; support was more often teacher- or peer-mediated, suggesting limited opportunities for autonomy and consistent accommodation. Consistent with the revised checklist’s instructional practice indicator (Section H), UDL-aligned features, such as planned provision of multiple means of engagement, representation, and expression, were not in evidence across most observed lessons. Where adaptations existed, they

tended to be limited, reactive, or dependent on individual teacher initiative rather than systematically embedded as routine instructional design features.

- **Uneven Participation Structures and Contingent Inclusion**

Classroom observation further indicated that mainstream participation was not consistently evident for all SWDs during school visits. While some learners were observed participating in regular classroom lessons alongside their peers, in other instances, particularly for learners with higher support needs, students were observed engaging in separate learning activities or using alternative spaces rather than joining the same lesson. Interpreted strictly within the limits of direct observation, this pattern reflects variation in placement and participation arrangements at the time of the visit; however, the frequency, purpose, and formal basis of these arrangements require triangulation with interview and document evidence. In one school, for example, some learners with intellectual/developmental disabilities were observed participating in structured art-based and handicraft activities, including preparation of products for sale, illustrating a localized alternative participation arrangement during the observation period.

To examine institutional traces of formal intent, proceduralization, and accountability, evidence from document review indicates that there is limited and weakly systematized documentation of classroom-facing adaptation and follow-through mechanisms.

4) Evidence from document review: TL practices

- **Institutional Articulation without Operationalization: Weak Systematization of Instructional Adaptation and Monitoring**

This subtheme is reported as documentary evidence of institutional articulation, indicating that the translation of inclusive intentions into classroom-facing adaptation and monitoring tools was limited and weakly systematized. Across the reviewed records, evidence that SWD support was routinely translated into lesson-level planning and instructional adjustments was limited. Where references to adaptation appeared, they were rarely supported by consistent documentary traces such as adapted lesson plans, accommodation checklists, instructional modification notes, or classroom-level support records linked to specific learner needs. Similarly, documentation rarely demonstrated systematic follow-through mechanisms for monitoring SWD participation and learning progress (e.g., progress monitoring tools, learner support logs, or documented review and

adjustment cycles). Where monitoring was reported, it tended to focus on enrolment counts and activity completion, rather than on tracking the implementation of accommodations and associated learning outcomes over time.

- **Systemic Constraint and the Dominance of Coping Pedagogy (TL): Synthesis**

Under coverage-driven accountability regimes, teaching–learning practices function as the site where systemic pressures crystallize into patterned instructional exclusion. FGD evidence shows that planning is organized around syllabus completion and pacing imperatives, rendering inclusion reactive and constraining sustained instructional collaboration; differentiation frequently collapses into simplification or behavioral management rather than scaffolded access to shared learning goals, participation structures remain weakly routinized with peer support operating as coping rather than structured pedagogy, multimodal access is limited with UDL largely discursive rather than systematically enacted, and assessment consolidates these dynamics as written-test dominance and contested accommodations position evaluation as a regulatory filter rather than an adaptive instructional tool. Across KIIs, observations, and document review, inclusive intentions appear articulated yet minimally operationalized: coaching is constrained under an add-on coordination model, adaptations remain contingent on individual initiative, accommodations are improvised and exceptionalized, professional development is sporadic and weakly practice-oriented, resource presence rarely translates into instructional integration, participation arrangements are uneven, and documentation reflects limited lesson-level adaptation tools and weak monitoring of accommodation implementation and learning progression. Collectively, TL enactment remains episodic and weakly routinized, reflecting fragile institutional stabilization of inclusive pedagogy.

b) Resource Provision (RP) Practices: The Materialization of Inequality

RP practices examine the availability, accessibility, and routine usability of instructional and assistive resources that enable SWDs to access the curriculum on equitable terms. RP includes accessible learning materials (Braille, large print, tactile, and adapted resources), assistive devices, adaptive furniture and accessible spaces, functional resource-center tools, and the integration of available audiovisual materials and technology. It also captures how teachers work with school leadership and staff to secure, mobilize, maintain, and deploy resources and alternative supports

for SWDs. Analytically, the emphasis is whether provision operates as a day-to-day learning infrastructure—obtainable, usable, maintained, and classroom-facing—rather than a symbolic inventory or intermittent donation. The focus here is not teaching strategies themselves, but whether resources are obtainable, functional, accessible, and classroom-facing in daily routines.

1) Evidence from FGDs: RP practices

- **Scarce accessible materials; dependence limits independent engagement**

Across FGDs, teachers consistently reported shortages of accessible instructional materials and assistive tools (e.g., Braille books, tactile resources, large-print materials, relevant assistive technologies). In most schools, this scarcity was described as producing dependence: SWDs access lesson content through teacher narration, passive listening, or peer mediation rather than direct engagement with texts and tasks. Teachers also reported that where materials exist, they are often too few, shared, stored in resource rooms, or unavailable at the point of instruction, making access fragile and easily disrupted.

In School E, one teacher stated, "In the library. the shelves look full, but for blind learners, there is nothing usable… no Braille books and no device to read text aloud" (Teacher FGD, School E). In School A, a teacher explained, "We do not have enough assistive materials… so students depend on us or on peers" (Teacher FGD, School A). In School G, teachers described accessible materials as missing at the classroom level: "Access remains a promise, not something we use in class" (Teacher FGD, School G). Returning to School E, a teacher summarized, "Without these materials, learners cannot choose tasks or learn independently" (Teacher FGD, School E). Where accessible materials are scarce or not classroom-available, participation becomes dependent rather than independent, narrowing core learning acts such as reading, writing, and individual practice. The findings point to treating accessible materials and assistive tools as basic learning inputs, supported by routines that ensure classroom availability and usability rather than storage or symbolic display.

- **Resource centers with limited access and classroom-facing utility**

Although many schools have resource rooms, teachers described limited access and weak classroom integration. Common constraints included locked or restricted access, unclear borrowing routines, limited time to collect materials, and resources that are outdated, mismatched to learners' needs, or kept for display. Teachers also reported minimal consultation about what is

needed for instruction, so materials (when present) do not reliably translate into classroom-facing support. In School H, a teacher stated, “It works like a storeroom… sometimes the door is locked, so we can’t take materials when we need them” (Teacher FGD, School H). In School C, teachers reported, “There is no clear way to borrow and return… nobody asks us what we need in class” (Teacher FGD, School C). In School L, teachers explained, “If someone checks the room, they think we have support, but in the classroom we don’t feel it” (Teacher FGD, School L). When resource centers have limited access and usability, resources remain “in the school” but not in the classroom, pushing practice back to coping and improvisation. The findings indicate the need for simple governance routines: predictable access, clear borrowing procedures, teacher-involved selection, basic maintenance, and monitoring that tracks classroom use and learner benefit, not room existence alone.

- **Unreliable communication access for deaf learners**

Teachers reported that sign-language interpretation and accessible audiovisual materials are unreliable, rendering participation intermittent and conditional. In many schools, interpretation was described as irregular and treated as an extra duty rather than a core provision. Teachers also noted that audiovisual materials are rarely accessible (e.g., no captions), limiting learning access and peer interaction. In School J, a teacher stated, “We have educational programs, but deaf learners cannot use them because there are no subtitles” (Teacher FGD, School J). In School B, teachers noted sporadic interpretation: “Maybe twice a week… other days the students just sit lost” (Teacher FGD, School B). In School A, teachers stressed group-work exclusion: “Without sign-language support, group work becomes silent and isolating for deaf students” (Teacher FGD, School A). When communication supports are unreliable, inclusion becomes placement without instructional access. The findings point to predictable interpretation support, captioned/accessible audiovisual materials, and staff allocation for communication access as a core learning resource.

- **Inaccessible spaces and furniture normalize in-school segregation**

Teachers described non-adapted furniture and inaccessible spaces as daily participation barriers. Fixed desks, narrow classroom layouts, steep or unsafe ramps, difficult routes, and inaccessible toilets were reported as constraining mobility, safety, privacy, and participation. In some accounts, coping solutions (e.g., separating learners during noisy routines) were described as practical but socially costly, reducing peer interaction and belonging. In School F, a teacher stated, “When a

child comes with a wheelchair, we place the wheelchair at the end, like the room has no place for the child" (Teacher FGD, School F). In School I, teachers noted, "We have a ramp, but it is too steep… we fear an accident" (Teacher FGD, School I). In School D, teachers reported, "The toilet is not accessible and not safe…" (Teacher FGD, School D). In School C, teachers explained, "We take the child to eat in a quiet room… but then the child eats alone" (Teacher FGD, School C). When spaces are not usable, enrolment becomes partial participation and separation becomes normalized. The findings indicate the need for functional accessibility checks (routes, ramps, toilets, and classroom layout) and basic adaptive supports guided by day-to-day usability rather than one-time compliance fixes.

- **Weak provision systems: scarcity compounded by restricted use and uneven allocation**

Beyond absolute shortage, teachers described weak systems for obtaining, storing, maintaining, and distributing resources. In many schools, scarcity was intensified by restricted use (locked materials to avoid damage), shared devices, weak maintenance, and selective prioritization across disability types. Teachers also described uneven provision that favors visible impairments while leaving autism and intellectual disability with limited material support.

In School E, teachers noted, "We don't have enough wheelchairs, so students take turns using the one we have" (Teacher FGD, School E). In School J, teachers reported, "Hearing aids are not enough… sometimes the device is not even working" (Teacher FGD, School J). In School H, teachers stated, "Some materials are kept for showing, not for using" (Teacher FGD, School H). In School K, teachers noted, "Most support goes to students who are blind or have mobility problems… autism or intellectual disability… very little" (Teacher FGD, School K). When access is restricted or uneven, exclusion becomes built into routines through "taking turns," locked resources, and selective provision. The findings point to provision routines that enable functional use: clear access procedures, basic inventory and maintenance responsibilities, and needs-based allocation guided by participation barriers rather than disability labels.

Holds under pressure: In some schools, resource provision "held" more effectively under pressure when basic resource-management routines enhanced the predictability and usability of access. Teachers reported that simple sign-out and return records in resource centers reduced material loss, clarified responsibility, and improved the reliability of obtaining scarce resources.

Provision was further stabilized where resource use was embedded within routine review and planning cycles, including internal evaluations of IE services and time-bound annual action plans specifying responsibilities, timelines, and review points. These governance routines reduced access restrictions, minimized the persistence of locked or unused materials, and made maintenance and allocation more predictable despite scarcity. The implication is that institutionalizing straightforward access protocols, inventory and maintenance responsibilities, and structured review cycles that track classroom use and learner benefit can reposition provision as classroom-facing infrastructure rather than symbolic inventory.

To corroborate and extend teachers' accounts by clarifying coordination, authority, and implementation constraints, evidence from KIIs indicates that nominally available resources are frequently unusable in routine instruction.

2) **Evidence from KIIs: RP practice**

- **Availability–Usability Mismatch and Restricted Access**

The coordinators always made a clear distinction between the presence of materials and their usability in actual teaching-learning situations. At various schools, it was explained that sometimes materials were inadequate, outdated because of curricular changes, incomplete, put away for security purposes, or unusable because of the absence of the needed consumables or repairs. Restriction in access to such materials became an obstacle to their regular utilization: "Sometimes materials are locked away, and the key is in the office of an administrator who is not always present" (IERC coordinator, School F). The coordinators mentioned the difficulty in finding a balance between storing materials safely and utilizing them in teaching practice: "Some materials are stored safely, but they are underused; sometimes it happens because teachers do not know how to use them, and sometimes there is no easy access to those materials" (IERC coordinator, School F). Limited amounts of materials were used selectively: "There are some materials at our center, but not sufficient in numbers in relation to the number of students, which is why we use them selectively" (IERC coordinator, School D).

- **Structural Financing and Maintenance Deficits**

Constraints were repeatedly framed as structural, centering weak procurement and supply chains, limited maintenance capacity, and the absence of predictable financing—including dedicated

budget lines—for IERC operations. Coordinators stressed that resource acquisition alone does not secure sustained access or impact when upkeep is neglected. One coordinator summarized this challenge clearly: “The biggest challenge is not only buying devices. Maintenance and consumables are ignored, so devices become ‘dead resources’.” (IERC coordinator, School B). The absence of reliable financing was described as undermining planning and weakening institutional commitment: “Budget is limited and inclusion competes with many priorities. Without a clear budget line, the center depends on irregular support” (IERC coordinator, School E). Another articulated the implications more forcefully: “There is no annual budget for the IERC. We beg for everything. How can you plan without a budget?” (IERC coordinator, School E).

- **Capacity Gaps and the Fragility of Sustainable Provision**

Even where resources were donated, coordinators emphasized that benefits remained limited without hands-on training that enables teachers to integrate materials into instruction: “Even when something is donated, teachers may not use it because they were not trained, so the impact stays low” (IERC coordinator, School J).

Taken together, these sources converge on Synthesis (ISPr). Overall, coordinators portrayed Inclusive School Practices as constrained by interlocking capacity limitations in time, professional support, financing, and maintenance systems, which together generate a persistent usability gap in both pedagogical support and resource provision. In their accounts, inclusive practice relies heavily on improvised adaptations and individual teacher commitment, while the enabling conditions for consistency—protected time for coaching, sustained practice-oriented professional development, accessible and curriculum-relevant materials, and predictable budgets for maintenance and consumables—remain insufficiently institutionalized. This pattern aligns with the cross-cutting document synthesis on policy intent versus operational specificity, which clarifies why implementation remains fragile.

To verify these accounts through practice-facing indicators of enactment and usability, evidence from observations indicates that persistent gaps in functional availability due to absence, poor condition, missing components, or restricted access despite on-site storage.

3) **Evidence from observations: RP Practices**

- **Functional Availability Gaps and Disability-Specific Resource Deficits**

Across schools with relevant enrolment patterns, observations documented persistent gaps in functional availability, as materials and equipment were often not available in practice due to absence, poor condition, missing essential operating components, or restricted access despite being stored on site. Across schools enrolling students with visual impairments (SWVI), Braille textbooks aligned with the new curriculum were typically absent or outdated, whereas slate and stylus were more commonly available and functional. Screen-reader computers were occasionally present but were frequently non-operational, and low-vision aids (e.g., magnifiers and large-print materials) were largely absent. For students with hearing impairments (SWHI), hearing aids were often present; however, batteries were frequently unavailable and FM systems were commonly broken, incomplete, or unused. Classroom-based communication supports, particularly sign language interpretation and related aids, were largely unavailable, with preferential seating emerging as the most consistently observed accommodation. For students with physical impairments (SWPI), wheelchairs were sometimes available but not consistently functional due to damage, while adjustable desks and writing aids were often unavailable. Disability-responsive safety preparedness indicators (including arrangements for urgent situations) and accessible play provisions were rarely evident in a usable form; where arrangements existed, they were not reliably accessible in practice.

For students with ASD and intellectual/developmental disabilities (SWID), assistive resources and learning materials were generally less visible and less evidently integrated into routine instruction than those observed for students with sensory and physical impairments. For SWASD, structured supports such as visual schedules, PECS/picture-based communication aids, and structured teaching materials were infrequently observed in active use during school visits. Quiet or sensory-friendly spaces were occasionally present; however, where such spaces existed, they appeared to function primarily as reactive arrangements rather than as routinely planned components of daily learning. In addition, trained staff and shadow support were generally not observable across the schools visited. For SWID, simplified or adapted textbooks were not observed. Concrete learning materials/manipulatives were sometimes present, but their use appeared limited during observed activities. Life-skills learning materials and transition-planning tools were also largely absent

across schools, suggesting that routine provision for functional skill development and planned transitions was not consistently institutionalized in observable practice.

- **Availability–Usability Mismatch and Fragile Implementation Conditions**

Generally, the observation evidence converged on a consistent pattern: inclusive inputs were intermittently available, but their functional usability in everyday practice was frequently constrained. Partial physical accessibility interacted with constrained IERC service functioning, limited functional disability-specific resources, and weak implementation conditions, including sporadic classroom use, limited observable competence in using assistive resources, limited student independence, weak alignment between provision and learner needs, and weak maintenance or replacement arrangements. Within this broader implementation gap, cross-cutting patterns were also evident: systematized peer support structures were not observable, UDL-aligned instructional design features were generally not in evidence, functional support varied by disability category, and disability-responsive safety preparedness was not consistently observable. Collectively, these interacting constraints produced a persistent availability–usability mismatch, contributing to fragile and person-dependent support and limiting reliable participation and curriculum access for SWDs across routine school activities.

To examine institutional traces of formal intent, proceduralization, and accountability, evidence from document review indicates that partial recording with limited linked systems for updating, replenishment, maintenance, instructional integration, and outcome-oriented monitoring.

4) Evidence from document review: RP Practices

- **Enumerated Provision without Systematic Resource Governance**

This subtheme is reported as documentary evidence of institutional articulation, indicating partial documentation of resources and enrolment reporting, but limited evidence of linked systems for inventory updating, procurement planning, maintenance, instructional integration, and monitoring beyond enumeration. Resource center inventories or logs were available in only a limited number of schools and were often outdated, incomplete, or inconsistently updated. Documentation rarely linked listed resources to lesson-level instructional use (e.g., how materials were intended to support curriculum access), to procurement or replenishment cycles, or to routine maintenance and repair arrangements. Even where school identity documents referenced technology-supported

education (as reflected in the illustrative case), corresponding records rarely demonstrated how assistive technologies and related materials were inventoried, allocated for use, maintained, or aligned to SWD learning needs. Evidence of systematic review of resource adequacy and effectiveness, such as periodic stock audits, usage records, or documented decisions guiding replacement and upgrading, was largely absent.

- **The Materialization of Inequality (RP): Synthesis**

RP practices constitute the material site where systemic constraints become institutionalized as participation boundaries in everyday school life. FGD evidence indicates persistent scarcity of accessible materials and assistive tools, reinforcing dependence and constraining independent engagement; resource centers, though formally established, frequently function as restricted or symbolic spaces rather than classroom-facing infrastructure; communication access for deaf learners is unreliable; and inaccessible spaces and furniture normalize partial participation and in-school segregation. Across KIIs, observations, and document review, a consistent availability–usability mismatch emerges: resources are often insufficient, outdated, incomplete, locked, misaligned with curriculum demands, or rendered non-functional by weak maintenance and financing systems. Procurement and budgeting remain unpredictable, maintenance and consumables are underfunded, hands-on training is limited, and governance routines for inventory, allocation, and monitoring are weakly institutionalized. Observations confirm uneven disability-specific provision and limited instructional integration, while documentation reflects an enumerated inventory without linked systems for replenishment, maintenance, or outcome-oriented monitoring. Collectively, RP enactment appears fragile, uneven, and weakly stabilized, positioning resource provision not as enabling learning infrastructure but as a structural mechanism through which unequal participation is reproduced in routine practice.

- **ISPr Interpretive Finding: Operational Enactment under Instructional and Material Constraint—Fragile Stabilization of Participation**

In general, TL and RP indicate that ISPr is operationally enacted yet structurally constrained within everyday school systems. Instructional practices unfold under coverage-driven accountability pressures that render inclusion reactive, differentiation simplified, participation weakly routinized, and assessment regulatory rather than adaptive. Simultaneously, material conditions delimit the practical boundaries of instructional possibility: accessible resources are scarce, inconsistently

usable, misaligned with curriculum demands, or rendered non-functional through weak maintenance, restricted access, and unpredictable financing. Across FGDs, KIIs, observations, and document review, a consistent pattern emerges in which adaptations are improvised and exceptionalized, coaching is an add-on and time-constrained, resource centers are symbolically present but weakly classroom-facing, and governance routines for instructional follow-through and material maintenance remain under-embedded. Availability does not secure usability; intention does not secure routinization. Consequently, inclusive participation is stabilized only contingently—dependent on individual teacher initiative, episodic coordination, and uneven material support—rather than secured through predictable instructional design and infrastructural reliability. ISPr therefore reflects not the institutionalization of inclusive pedagogy, but its fragile enactment under interlocking instructional and material constraints.

Cross-cutting synthesis (Documents): Policy Intent versus Operational Specificity, across the reviewed documents, several areas of relative strength were evident at the level of stated intent. Most schools articulated broad commitments in their vision, mission, and values statements, commonly emphasizing quality education, ethical citizenship, transparency/accountability, and community participation. The illustrative case reflects this pattern: it combines a future-oriented vision emphasizing well-rounded, problem-solving learners, a mission emphasizing quality delivery through stakeholder involvement and technology-supported education, and values stressing integrity-related commitments and collaboration. At the same time, substantial gaps were observed in translating these general commitments into operational means for inclusive education. School plans and related documents generally lacked operational specificity, with inclusive intentions rarely accompanied by clearly defined procedures, assigned responsibilities, timelines, or measurable indicators. Dedicated budget allocations for inclusive education were absent, and monitoring tools capable of tracking accommodation, participation, and learning progress of SWDs were largely undeveloped. Documentation of coordination and accountability mechanisms, including committee tasks, meeting minutes, and follow-up processes, was similarly weak.

National frameworks conceptualize inclusive education as a system-level change process requiring coordinated action, resourcing, and accountability. In contrast, the reviewed school documents tended to affirm broad institutional ideals, often centered on quality and general equity, while offering limited procedural specificity for SWD-focused implementation. As a result, inclusion

was often visible as rhetoric and institutional ethos but less visible as a governed and monitored implementation agenda anchored in resourcing, procedures, and accountability tools. Taken together, these patterns indicate that, while inclusive education is frequently affirmed at the level of institutional narrative, it is weakly institutionalized through actionable procedures, resourced plans, and systematic monitoring mechanisms. The absence of such operational artifacts suggests that inclusion remains fragile and often symbolic, dependent on individual initiative rather than embedded within stable, school-wide governance and accountability structures.

Building on these document-based patterns, the review establishes an institutional baseline of formal intent and planning against which findings from structured observations, key informant interviews, FGDs, and quantitative analyses can be interpreted. The limited operational specificity and weak documentation of inclusive mechanisms provide essential context for understanding subsequent findings related to implementation gaps, availability–usability mismatches, and stakeholder experiences across schools. In this way, the document review functions as an institutional benchmark: it clarifies what schools formally document and plan, and it helps explain why observed practices and stakeholder accounts may diverge from documented intent. This document-based gap is cross-cutting: it helps explain why cultural endorsement and classroom effort do not reliably convert into routinized inclusion across schools.

4.2.5. Cross-domain integration (C–P–P): conditional inclusion as a system-student mismatch pattern

Across schools, qualitative evidence across FGDs, KIIs, observations, and documents converges on a consistent interpretation: inclusive education operates as an interacting system in which cultural norms, policy arrangements, and everyday practices shape one another and produce a relatively stable—but unequal—pattern of schooling. Inclusion is widely affirmed at the level of principle. Yet in routine implementation, it often takes the form of conditional inclusion: learners with visible, mild, or socially perceived "manageable" impairments are more likely to be accommodated within mainstream routines, while students with higher and more complex support needs (e.g., autism, intellectual disabilities, Down syndrome, multiple impairments) more frequently encounter exclusionary pressures, ranging from quiet discouragement at enrolment, to marginal positioning inside classrooms, to redirection toward segregated spaces.

This pattern is best understood as a system–student mismatch: the misalignment between school routines, resources, authority structures, and normative expectations, on the one hand, and the diverse support needs required for equitable participation and learning. In this pattern, exclusion is produced through institutional routines, governance norms, and resource gaps rather than by disability itself. The system-level outcome resembles enrolment without meaningful inclusion, where physical presence is undermined by inaccessible environments, absent communication supports, rigid pedagogy, material scarcity, and culturally embedded low expectations.

The cross-domain logic is cyclical and self-reinforcing. First, weak operational policy, such as symbolic commitments without usable guidance, legitimate flexibility, protected resourcing, or clear accountability, pushes frontline actors toward improvisation as the default mode of implementation. Second, improvisation has predictable limits under overcrowding, coverage pressure, and scarce support infrastructure—limits that are felt most sharply for students with higher support needs, where participation requires sustained, planned adaptations rather than one-off adjustments. Third, when participation repeatedly breaks down, those breakdowns are commonly interpreted through prevailing cultural frames (sameness-as-fairness, protectionist logics, deficit-leaning assumptions about capability), which makes separation appear reasonable and reduces collective responsibility for adapting the system. Finally, these normalized interpretations lower institutional urgency to invest in operational supports (training, coaching time, accessible materials, communication access, maintenance systems, and monitoring tools), thereby reproducing the very conditions that made improvisation necessary in the first place.

Put simply, policy that is thin on operational specificity produces improvisation; improvisation fails most predictably where support needs are highest; those predictable failures are read as evidence that participation is not feasible; and that reading reduces pressure to build the enabling conditions that would make participation feasible—thereby sustaining the system–student mismatch. This cycle is visible across the three inclusion dimensions. In the Culture domain, inclusion is often welcomed in moral language, yet belonging and dignity remain weakly protected through shared routines, consistent peer protection, and predictable participation norms—making membership contingent rather than secured. In the Policy domain, inclusive intent is frequently present "on paper," but weakly converted into school-level procedures that authorize accommodation, clarify roles, and enable follow-through—leaving teachers uncertain, exposed,

and inconsistent in practice. In the ISPr domain, instruction and resource use unfold under scarcity and performance pressure, where coping and triage become dominant: differentiation narrows into simplification or management, assessment remains written-dominant and gatekeeping, and resources (when present) are often inaccessible, non-functional, or not classroom-facing.

Over time, the interaction among these domains consolidates a tiered ecology of inclusion. Students whose needs can be met through minimal adjustment are more likely to be sustained in mainstream routines; students requiring more intensive, structured supports are systematically pushed toward marginal participation or separation. The central finding, therefore, is not an absence of goodwill, but the absence of operationally resilient routines that make belonging, participation, accommodation, and learning progress hold under everyday conditions. Addressing conditional inclusion requires reducing the system–student mismatch by strengthening the policy-to-practice infrastructure (clear authorization and procedures, protected resourcing and maintenance, routine coaching and follow-up, and monitoring that tracks participation and learning), alongside cultural routines that protect dignity and membership as non-negotiable features of ordinary school life.

CHAPTER FIVE

DISCUSSION

5.1. Analytical Orientation: An Integrated Interpretive Framework

This chapter brings together the quantitative and qualitative findings to develop an integrated interpretation of how inclusive education is understood and enacted in primary schools of Addis Ababa. Moving beyond a method-by-method presentation of Phase I and Phase II results, it synthesizes evidence across the MMD to explain how inclusive education is perceived, interpreted, and enacted across interacting school and governance contexts. Rather than restating findings separately by method, the chapter advances an integrated analytical account organized around the study's 3 core constructs: ISC, ISP, and ISPr. Organizing the discussion around these constructs reflects the conceptual logic of the Index for Inclusion and allows inclusion to be examined as an interdependent system rather than as a set of isolated variables. In doing so, the chapter addresses the study's central concern: how inclusion is affirmed in principle yet constrained in practice, producing what this study conceptualizes as **conditional inclusion**—a pattern in which inclusion is endorsed at the level of principle but enacted selectively, unevenly, and under constraint.

The integration follows a deliberate explanatory logic grounded in the complementary strengths of the two phases. Phase I mapped the overall pattern of teachers' perceptions by identifying the extent of ISC, ISP, and ISPr (RQ1), demographic variations (RQ2), and the relationships among the three domains (RQ3 and RQ4). These results clarified the pattern and relative strength of associations across the inclusion system as perceived by teachers. Phase II then provided interpretive depth through FGDs, KIIs, observations, and document review, showing how inclusive ideals are enacted, negotiated, or constrained in everyday school life. Teachers' accounts help explain not only how inclusive commitments are expressed, but also why they often remain only partially translated into school routines under conditions of resource limitation, workload pressure, and uneven policy translation.

Integration is achieved through analytic attention to convergence, complementarity, and divergence across data sources. Statistical associations are interpreted alongside teachers'

narratives and observed practices, shifting the analysis from identifying relationships to explaining how those relationships operate within school contexts. This approach moves beyond surface alignment to identify the points at which inclusive intent weakens as it passes into policy and practice. The resulting synthesis is grounded in the realities of public primary schools in Addis Ababa, where inclusion unfolds within a context shaped by professional goodwill, structural constraint, and pedagogical improvisation. Inclusion, therefore, emerges not as a settled policy outcome but as an uneven process shaped by the interaction of culture, policy, and practice under specific institutional conditions.

5.2. Theoretical Framing of the Integrated Interpretation

While RQ1–RQ4 establish the structural contours of teachers' perceptions of ISC, ISP, and ISPr, RQ5 provides the interpretive entry point through which these patterns can be explained theoretically. Building on the theoretical frameworks introduced in Chapter Two, this section draws on disability models, the Index for Inclusion, and Bronfenbrenner's bioecological model as complementary interpretive lenses for the integrated analysis. Although these frameworks were introduced earlier to ground the study conceptually, they become most central in the Discussion, where findings from the quantitative and qualitative phases are brought together. Consistent with a sequential explanatory MMD, the quantitative results identify structural patterns, the qualitative findings provide contextual meaning, and theory is used at this stage to explain the mechanisms and systemic conditions through which these patterns persist, giving rise to conditional inclusion.

5.1.1. Disability Models in Tension

The data reveal an education system in which different models of disability coexist in tension, shaping perceptions and practices related to the inclusion of SWDs. The continued influence of the medical model is evident in deficit-oriented framings of student needs, the pervasive language of "manageability," which functions as a subtle gatekeeping mechanism, and the decline in perceived inclusivity and support as support needs become more complex. This pattern aligns with findings from Ethiopian primary schools, where teachers often attribute learning difficulties primarily to a child's impairment, reflecting a deeply rooted "within-child" deficit lens (Belay, Fentahun, and Misaye, 2015; Teketel, 2018; Tekle and Geberew, 2022; Tesaka et al., 2025; Woyessa et al., 2019). Similar persistence of medicalized reasoning has also been documented

across Sub-Saharan Africa, even in policy environments that formally endorse inclusion (Mukhopadhyay and Moswela, 2010; Singal, 2016).

At the same time, the social model is strongly supported by the convergence of quantitative and qualitative evidence pointing to disabling structures rather than impairment-inherent limitations. Weaknesses in the policy and practice dimensions, combined with qualitative accounts of inaccessible environments, fragmented supports, and weak policy translation, support an interpretation of disability-related exclusion as produced largely through systemic barriers rather than located solely within the child. Empirical studies in Ethiopian primary schools reinforce this reading, consistently identifying inaccessible infrastructure, limited adapted materials, and rigid pedagogical practices as major barriers to participation (Abebe et al., 2023; Aderie, 2016; Aemiro, 2020; Asrat, 2020; Belay et al., 2015; Esayas et al., 2025). This interpretation is also consistent with global inclusive education literature, which identifies institutional and ecological barriers as primary drivers of exclusion (Florian and Black-Hawkins, 2011; Ramírez-Solórzano and Herrera-Navas, 2024; Slee, 2011).

The biopsychosocial model is widely endorsed but unevenly institutionalized, with research pointing to a persistent gap between philosophical commitment and practical implementation. Although teachers often show an intuitive understanding that learning difficulties emerge through the interaction of learner characteristics and environmental conditions, systems frequently lack the assessment tools, coordination mechanisms, and professional capacity needed to operationalize this interactional framework. As a result, even reform-oriented systems often continue to function partly within medicalized paradigms, and this tendency becomes more visible as cases become more complex (Ampiah et al., 2020; Farre and Rapley, 2017; Wade and Halligan, 2017; WHO, 2007; Singal, 2010; Taqiyah et al., 2025).

Importantly, the tension among these disability models appears to reflect less ideological confusion among educators than the structural limitations of the system itself (Alison, 2014; Xiao, 2022). While systems in the Global North may also struggle to fully realize social or biopsychosocial approaches, they often retain intermediary mechanisms—such as formal accommodation procedures or collaborative professional arrangements—that reduce the likelihood of complete reversion to deficit framing (Carrie, 2021; Florian and Black-Hawkins, 2011). In the Ethiopian

context, however, the absence of comparable institutional buffers makes a default to medicalized, "within-child" explanations more likely and more persistent.

5.1.2. The Index for Inclusion as a Diagnostic Framework

To understand how these tensions in disability conceptualization translate into organizational weakness, the analysis turns to a second key framework. The Index for Inclusion conceptualizes inclusion as a reinforcing progression from inclusive culture to inclusive policy to inclusive practice (Booth and Ainscow, 2002; 2011). This study's central diagnostic claim is that this progression becomes progressively decoupled in the Ethiopian context. The findings reveal not simply low performance within individual dimensions, but a failure of translation between them. Aspirational inclusive values and relational commitments are not consistently codified in operational policy guidance, and symbolic policy commitments do not reliably enable practice. In the Ethiopian context, this decoupling mirrors the broader implementation gap in education policy, where ambitious national strategies for inclusion often falter at regional and school levels because of limited actionable guidance, inadequate resources, and weak accountability (Bewunetu et al., 2025; Engdawork et al., 2025; MoE, 2012b; Tesfaye, 2020). Similar forms of decoupling between values and enactment have also been documented in wider policy enactment research, where rhetorical alignment can mask operational weakness (Swiss, 2009; Zhan, Lo, and Tang, 2014).

In this context, the Index functions less as a descriptive model and more as a diagnostic lens for locating where inclusive commitments weaken as they move from culture into policy and from policy into practice. Its value in this study lies in showing that the problem is not only that culture, policy, and practice vary in strength, but that the links between them are weak. Inclusion loses force as it moves from principled commitment to operational enactment.

5.1.3. A Bioecological Analysis of the Inclusion Ecosystem

Finally, to explain the multi-level dynamics that produce and sustain the culture–policy–practice (C–P–P) decoupling, the findings are interpreted through Bronfenbrenner's bioecological model. This framework clarifies how inclusion is shaped through interaction between everyday school processes and wider institutional structures across interdependent system levels, rather than by isolated actors or intentions alone. At the microsystem level, inclusion is enacted through

classroom-level improvisation and what this study conceptualizes as **coping pedagogy**: ad hoc, reactive adjustments made by teachers in the absence of routinized instructional support. These efforts reflect professional goodwill, but they also point to the absence of systematically designed accommodations within the instructional system. Similar patterns are reported in qualitative studies of Ethiopian teachers, who describe relying on unsupported, improvised strategies to respond to the needs of SWDs (Meskerem, 2017).

At the mesosystem level, the necessary linkages between teachers, SNE educators, school leaders, and families are fragile and largely person-dependent rather than institutionally structured. Local empirical evidence confirms the limited presence of structured collaboration between regular and special needs teachers in primary schools of Ethiopia, thereby weakening the inclusive support ecosystem (Abebe et al., 2023; Jaffer, 2018). International research similarly shows that sustained inclusive practice depends not only on leadership commitment but also on the alignment of formal organizational structures and collaborative networks, with structured interaction patterns enhancing coordination and reform sustainability (Ainscow and Sandill, 2010; Penuel et al., 2010; Velliaris, 2010).

A major source of dysfunction resides at the exosystem level of educational governance, where the AACAEB and its subordinate administrative offices up to the woreda level are characterized by weakly institutionalized and inconsistently enacted policy frameworks regulating operational guidance, resource allocation, and accountability. This results in a persistent lack of actionable, school-facing support for inclusion. Empirical evidence indicates that woreda education offices frequently lack the capacity, funding, and explicit mandates required to provide sustained, systematic support to schools (Getachew, 2025; Kelemu and Derib, 2023; Tolcha et al., 2025).

These exosystem failures are further intensified by macrosystem pressures, including competing discourses that privilege examination performance over rights-based inclusion, entrenched societal stigma toward disability, and the historical legacy of segregated education. Ethiopian scholarship identifies these forces as significant constraints that marginalize inclusive values in favor of academic performance metrics (Wondwosen, Yitayal, and Semahegn, 2014). Within the chronosystem, teacher experience accumulates as a compensatory resource at the individual level—expertise developed through prolonged engagement with SWDs. While this may partially

offset systemic gaps, it does not translate into durable organizational learning or broader institutional change, a pattern also identified in bioecological analyses of inclusive reform (Priestley et al., 2015). The system, therefore, remains largely static, relying on individual adaptation rather than sustained organizational development.

Taken together, the bioecological analysis shows that the challenges of inclusive education in this context are not best understood as isolated classroom-level failures, but as a system-wide decoupling that unfolds across interacting levels of influence. Teachers attempt to enact inclusion through coping pedagogy at the microsystem level, but these efforts are undermined by fragile mesosystem linkages, weak exosystemic policy operationalization, and macrosystem pressures that privilege standardization and performance over equity. Over time, individual experience accumulates as compensatory capacity rather than becoming institutional learning, leaving the system structurally constrained. Within this decoupled ecology, inclusive intent persists mainly through localized and weakly institutionalized routines that allow inclusion to hold under pressure, albeit precariously. This broader pattern will be synthesized more fully in Section 5.6. Against this backdrop of systemic decoupling, the analysis now examines the first substantive domain—ISC—to trace how aspirational values and relational commitments are articulated, constrained, and rendered conditional within this multi-level ecology.

5.3. Inclusive School Culture (ISC): Normatively Affirmed yet Institutionally Fragile—Conditional Enactment

5.3.1. The Core Cultural Paradox

A persistent cultural paradox characterizes inclusive education in primary schools: inclusion is widely endorsed as a normative principle, yet its application remains selective, materially constrained, and uneven across disability categories. Across both resource-constrained African contexts and higher-income education systems, empirical studies identify a recurring pattern in which teachers express principled support for inclusion while classroom practice remains stratified by perceived disability severity (Achamrah, 2022; Majoko, 2018; Mukhopadhyay et al., 2012; Sakız and Woods, 2014). This contradiction is most visible in forms of conditional acceptance, whereby inclusion is viewed as feasible for students with mild impairments but resisted for those with severe or intellectual disabilities (Gaad, 2004; Mukhopadhyay et al., 2012).

In the Addis Ababa public primary school context examined in this study, the ISC paradox assumes a distinct empirical configuration. Although ISC recorded the highest mean among the three dimensions ($M = 2.75$, $SD = 0.61$), it remained significantly below the neutral benchmark ($t(423) = –8.44$, $p < .001$). Thus, culture represents a relative strength rather than substantive adequacy. Qualitative evidence shows that teachers endorse inclusive values in moral and rights-based terms; the main constraint does not lie at the level of belief. But, these promises are weakly institutionalized in relational routines and organizational structures. Thus, inclusive culture functions more as an aspirational ethic than as a regulative system embedded in daily school practice. Local empirical studies corroborate this pattern. While teachers express positive attitudes toward inclusion in principle, these promises are not systematically translated into institutional practices (Getachew, 2018; Tamirat & Xiaoduan, 2023; Mahider, 2013). More recent studies similarly document a persistent gap between attitudinal endorsement and practical enactment, indicating that inclusive culture in Ethiopian schools remains structurally under-institutionalized (Tamirat & Xiaoduan, 2021; Reta & Alemayehu, 2024; Esayas et al., 2025; Tesaka et al., 2025).

International scholarship reinforces this interpretation. Inclusive rhetoric is frequently embedded in school cultures yet inadequately sustained by systemic structures, resulting in uneven participation (Ainscow, 2020; Slee, 2018). Empirical evidence from low- and middle-income contexts similarly shows that teacher support for inclusion coexists with limited preparedness and weak institutional capacity (Carter et al., 2022; Ekanem, Jane, & Chidinma, 2025; Kamenopoulou, 2022). The present study extends this evidence by demonstrating that in public primary schools of Addis Ababa, the fragility of inclusive culture is organizational rather than ideological. The foundational rupture lies not in teachers' commitments, but in the absence of institutional arrangements capable of translating espoused values into sustained practice.

Taken together, BC and EIV findings show that ISC is normatively affirmed but institutionally fragile. Schools espouse welcome and respect, yet belonging, participation, equity, and high expectations are not stabilized through enforceable routines. Inclusion depends largely on discretion and informal collaboration, while exam pressures, sameness-based fairness, and uneven protection dilute value enactment. Thus, inclusive culture functions more as a moral orientation than an institutionalized expectation—sustained through discretionary effort and vulnerable to erosion under performance and resource pressures.

5.3.2. Building Community (BC): Relational Commitment amid Fragile Belonging

Scorgie (2015) provide a focused empirical account of belonging as a contingent and unstable condition within inclusive schooling. Drawing on interviews with 28 parents of CWDs, they introduce the concept of boundary ambiguity to capture uncertainty regarding whether formally enrolled students were substantively recognized as valued members of the school community. Physical placement did not guarantee relational security, clear participatory roles, or stable recognition. Slee et al. (2019) offer complementary theoretical insight, arguing that struggles over belonging expose deeper structural logics of exclusion embedded within schooling. Although foundational scholarship such as Antia (2002) distinguished enrolment from membership, contemporary empirical engagement with contingent belonging remains limited.

Against this conceptual backdrop, the sub-dimension of BC recorded a mean indicative of limited structural consolidation ($M = 2.65$, $SD = 0.58$), indicating that teachers perceived belonging, participation, collaboration, and shared responsibility as weakly established. This statistical pattern aligns closely with the qualitative evidence, which describes persistent social marginalization and academic isolation among SWDs, particularly those with more complex support needs. Together, these findings point to a condition in which students are physically enrolled in mainstream schools and classrooms yet remain psychologically and academically peripheral. This pattern can be conceptualized as enrolment without membership, where formal access exists without substantive participation or social recognition. Teachers' accounts indicate that membership within the school community is not secured as an unconditional right, but instead becomes contingent upon perceived "manageability." Peer support tends to be informal and sporadic, leadership backing is episodic, and family engagement is largely reactive and contingency-driven. In the absence of predictable participation roles, structured opportunities for contribution, or enforced communal norms, belonging for SWDs remains fragile, situational, and uneven.

Local empirical studies in primary schools in Ethiopia similarly document that SWDs remain physically present but academically and socially segregated (Jaffer, 2018; Temesgen, 2018). This convergence between the present findings and prior local empirical evidence strengthens the interpretation of belonging as structurally unstable rather than individually determined. The same pattern resonates with the international literature, which distinguishes physical placement from

meaningful social participation as a central and enduring challenge for inclusive schooling across contexts (Koster et al., 2009; Garrote et al., 2017). Building on these strands of evidence, the present study extends this discourse by identifying contingent belonging as the core operational mechanism through which this gap is produced—a tacit, socially negotiated conditionality that emerges when inclusive culture, understood as both shared values and relational commitments, is weakly routinized and insufficiently supported by policy frameworks or organizational structures.

Synthesizing across qualitative sources, BC emerges as normatively affirmed yet structurally fragile, revealing a marked gap between symbolic inclusion and institutional consolidation. Although enrollment and public welcome are visibly secured, belonging and participation remain weakly routinized and differentiated according to the perceived intensity of support required. Membership is not anchored in predictable relational expectations but remains contingent upon teacher discretion, variable leadership emphasis, and informal collaboration practices. Participation frequently assumes an assistance-dependent form, peer support operates situationally rather than normatively, and school–family engagement is largely crisis-driven rather than systematically sustained. While documentary rhetoric foregrounds collaboration and shared responsibility, accountability for SWDs is weakly specified and implicitly concentrated within SNE personnel, narrowing the distribution of obligation. These patterns suggest that the community operates more as a symbolic ideal than as an institutionalized social system, producing conditional membership that fluctuates across actors, activities, and time under coverage pressure and resource constraints. This interpretation finds support in Scorgie's (2015) concept of *boundary ambiguity*, Olofsson's (2026) evidence of teacher-borne adaptation in the absence of systemic accommodation, Bartlett's (2018) leadership-dependent collaboration, and White et al.'s (2025) documentation of persistent structural barriers, collectively underscoring the institutional vulnerability of relational commitment.

Synthesizing across qualitative sources, BC emerges as normatively affirmed yet structurally fragile, revealing a marked gap between symbolic inclusion and institutional consolidation. Although enrollment and public welcome are visibly secured, belonging and participation remain weakly routinized and differentiated according to the perceived intensity of support required. Membership is not anchored in predictable relational expectations but remains contingent upon teacher discretion, variable leadership emphasis, and informal collaboration practices.

Participation frequently assumes an assistance-dependent form, peer support operates situationally rather than normatively, and school–family engagement is largely crisis-driven rather than systematically sustained. While documentary rhetoric foregrounds collaboration and shared responsibility, accountability for SWDs is weakly specified and implicitly concentrated within SNE personnel, narrowing the distribution of obligation. These patterns suggest that the community operates more as a symbolic ideal than as an institutionalized social system, producing conditional membership that fluctuates across actors, activities, and time under coverage pressure and resource constraints. This interpretation finds support in Scorgie's (2015) concept of boundary ambiguity, Olofsson's (2026) evidence of teacher-borne adaptation in the absence of systemic accommodation, Bartlett's (2018) account of leadership-dependent collaboration, and White et al.'s (2025) documentation of persistent structural barriers, collectively underscoring the institutional vulnerability of relational commitment.

The "holds under pressure" findings clarify when community-building becomes resilient. In a small number of schools, relational commitments were routinized through predictable parent–school communication, consistent adult intervention in peer conflict, and structured use of clubs or awareness platforms to promote inclusion. Under these conditions, expectations shifted from discretionary goodwill to institutionalized norms, making participation more predictable and enforceable. Belonging thus proved more durable amid examination pressure, workload intensification, and limited formal support. This mechanism partially aligns with existing scholarship. Cummings and Olson (2020) show that collaborative school–community relationships can sustain improvement under accountability pressures, while Johnson (2009) finds that structured relational practices strengthen belonging and outcomes. Conversely, Finnigan et al. (2013) warn that narrow accountability cultures and weak professional networks may constrain collective improvement. Collectively, the literature underscores the importance of relational and organizational structures but leaves unexplored whether institutionalized practices enable belonging to endure under sustained systemic pressure.

From a bioecological view, these dynamics reflect critically weak mesosystem linkages. Where BC relies disproportionately on the discretionary goodwill of individual teachers rather than on routinized institutional practices, it becomes the earliest and most vulnerable point of failure in the

inclusion process. In effect, the school community operates on a model of conditional belonging, directly undermining the principle of full membership central to the *Index for Inclusion*.

5.3.3. Establishing Inclusive Values: Normative Endorsement under Structural Dilution

The EIV sub-dimension recorded a comparatively higher, though still below-benchmark, mean (M = 2.86, SD = 0.66), indicating that inclusive values are widely affirmed at the declarative level. But, this normative endorsement did not consolidate into stable institutional regulation. Qualitative evidence across interviews, FGDs, observations, and document review reveals that endorsement coexists with persistent stigma, lowered academic expectations, and uneven protection against discrimination. The result is not the absence of inclusive values but their structural dilution. The apparent consensus thus masks a fragile value regime in which commitment is rhetorically sustained yet operationally contingent. This fragility aligns with national and continental scholarship documenting the persistence of attitudinal and structural barriers to inclusive education. In Ethiopia, limited conceptual clarity about disability and entrenched societal narratives continue to undermine execution (Gezahegne & Yinebeb, 2010), while inadequate teacher preparation constrains pedagogical responsiveness despite generally favorable dispositions (Franck et al., 2017). Burningham et al. (2024) also identify institutional support deficits as limiting participation and attainment for children with developmental disabilities.

Within this structural environment, teachers' accounts suggest that fairness is frequently interpreted as identical treatment rather than differentiated responsiveness. This interpretive move—treating equality as sameness—does not necessarily reflect hostility toward inclusion but instead reveals an epistemic narrowing of equity under pressure. Under examination demands and syllabus-coverage imperatives, professional value hierarchies are reordered in practice. Equity becomes professionally risky when accommodation appears to threaten pace, coverage, or measurable performance indicators. In this context, accommodation is not rejected outright; it is deprioritized. Ethiopian studies similarly document how limited conceptual differentiation between equality and equity results in uniform instruction that fails to address learner diversity (Belay et al., 2015; Tesfaye, 2020). Deficit assumptions—particularly toward students with autism or intellectual disabilities—further reposition disability as a problem of manageability rather than participation. The effect is a narrowing of inclusion to behavioral containment rather than learning

progression. Continental evidence reinforces this pattern: Genovesi et al. (2024) demonstrate how rhetorically progressive inclusion efforts remain constrained by systemic resource and training gaps, while Botts and Owusu (2013) document persistent stigma and exclusion in Ghana, underscoring the gap between formal commitment and lived enactment.

The "holds under pressure" pattern observed in this study illustrates how inclusive values are only partially stabilized. Routinized awareness activities, like disability day celebration, create visible symbolic anchors that counter overt stigma and maintain discursive legitimacy. These rituals function as cultural affirmations, particularly under conditions of systemic strain. Yet symbolic stabilization does not equate to regulatory force. Without enforceable norms, explicit procedural authorization, and distributed accountability, such activities remain episodic rather than structurally binding. Across qualitative sources, inclusive values retain moral legitimacy, but exam-accountability hierarchies reorder professional priorities. Accommodation becomes negotiable, and equity collapses into sameness as a defensible professional stance. Inclusion is reduced to admission and physical presence, while participation and progression become conditional upon conformity to identical performance expectations. Deficit framings, uneven protection, and weakly specified accountability structures together inhibit institutional embedding.

Comparative scholarship also reveals that formal commitment frequently coexists with constrained enactment where structural supports are misaligned with policy ambition (Das & Sarkar, 2025; Cramer et al., 2018; Rayner, 2017; Zohri & Bogotch, 2023; McClam et al., 2025; Arduin, 2015). This body of evidence reinforces the interpretation that inclusive values, absent organizational consolidation, remain vulnerable to erosion under performance pressure. Concurrently, the literature complicates any linear reading of symbolic commitment as ineffective. Powell et al. (2016) show that UNCRPD-linked awareness initiatives facilitated normative diffusion under supportive institutional conditions, signifying that symbolic shifts can contribute to structural change when embedded within enabling governance frameworks. But, other studies point more strongly to the limits of symbolic commitment when it is not institutionally routinized. Shomari et al.'s (2025) review of 43 studies identifies persistent endorsement–enactment gaps. Clement and Bigby (2009) report professional contestation despite formal frameworks, while Thomson et al. (2020) find limited participation gains from resource-intensive interventions. Ineland et al. (2015)

document enduring ambivalence resistant to policy rhetoric. Together, these findings suggest that symbolic routines require institutional consolidation to achieve regulatory traction.

The pattern observed in this study thus reflects the dilemmas of difference identified by Dyson (1999, 2001) and Slee's (2011, 2018) critique of conflating equity with equality. Yet the present findings indicate that this dilemma is not resolved by philosophical confusion alone. It is structurally reproduced within a high-pressure, low-support system in which accountability metrics privilege efficiency and coverage over differentiated participation. In such a configuration, sameness functions as a professionally defensible adaptation. The consequence is not explicit rejection of inclusion but its procedural thinning. Inclusive values remain discursively affirmed but institutionally under-specified, leaving them susceptible to erosion when SWDs cannot conform to standardized norms. In this sense, the study does not document the absence of inclusive values; rather, it demonstrates their conditional activation. Without structural authorization and routinized accountability, inclusive commitments remain aspirational rather than regulatory, vulnerable to displacement under systemic strain.

5.3.4. Inclusive Culture as Symbolic Legitimacy without Structural Embedding

Taken together, the findings indicate that ISC in this context functions primarily as symbolic legitimacy rather than as a structurally embedded social system. While teachers widely endorse inclusive values, these commitments are weakly embedded in routines, roles, and enforceable expectations. Inclusive culture, therefore, provides ethical legitimacy and symbolic direction but cannot reliably secure belonging, dignity, or participation without supportive policy and organizational structures. Supporting this interpretation, Tesaka et al. (2025) report better value endorsement alongside limited community-building engagement, illustrating the gap between declarative commitment and enacted practice. Stelitano, Russell, and Bray (2020) similarly document schools with articulated inclusive designs whose everyday routines contradicted their stated ethos, revealing weak organizational embedding. McMaster (2015) likewise argues that sustainable inclusion depends on collective reflection and structural commitment rather than rhetorical affirmation. Hudgins (2013) and Ainscow and Sandill (2010) emphasize leadership capacity and organizational conditions as prerequisites for durability.

The “holds under pressure” findings clarify the mechanism: inclusion persists only where localized routines temporarily stabilize values and relationships. Where such routines are weak or absent, culture retreats to symbolic affirmation rather than regulatory practice, rendering belonging contingent. This explains why ISC scores exceed those of policy and practice yet remain below the benchmark for genuine inclusion. ISC thus represents the primary site of conditional inclusion—legitimate at the level of discourse, intermittently enacted in practice, and insufficiently embedded within organizational structures. Without converting symbolic legitimacy into predictable and enforceable social systems, inclusive cultures cannot sustain operational inclusion.

5.4. Inclusive School Policy: Formally Articulated yet Weakly Institutionalized—Fragmented Policy-to-Practice Translation

5.4.1. Policy as the Critical (Yet Failing) Mediating Layer

The findings of this study should be interpreted against a substantial body of comparative scholarship documenting the persistent decoupling of inclusive education policy from its institutional enactment. Across high-income and European systems, inclusive reforms have repeatedly been characterized by durable policy–practice divides, systemic contradictions, and uneven translation of international commitments into domestic provision (Carrington and Elkins, 2002; Smyth et al., 2014; Vlachou et al., 2004). Parallel dynamics are evident across African contexts, where weak enforcement mechanisms, limited policy literacy, inadequate teacher preparation, and chronic resource constraints inhibit the operationalization of formally endorsed inclusion frameworks (Sepadi & Moshia, 2025; Opoku et al., 2021). Taken together, these studies suggest that inclusive education policy frequently operates as a symbolic commitment more than as a fully operational governance instrument capable of structuring practice.

Within this broader landscape, the present study contributes by empirically modeling the mediating function of policy within the culture–practice nexus. The SEM confirms that ISP occupies a theoretically central position: ISC significantly predicts ISP ($\beta = .609$, $p < .001$), and ISP significantly predicts ISPr ($\beta = .415$, $p < .001$), with a statistically significant indirect effect of ISC on ISPr through ISP ($B = 0.266$, 95% BC CI [0.188, 0.340]). These findings affirm the conceptual logic of the Index for Inclusion, which posits policy as the mechanism through which inclusive cultural commitments are translated into routinized school-level action.

However, the discussion becomes more complex when statistical centrality is considered alongside teachers' lived perceptions. Despite its modeled mediating role, ISP recorded a mean score significantly below the inclusivity benchmark ($M = 2.50$, $SD = 0.68$, $t(423) = –15.11$, $p < .001$). This discrepancy indicates that although policy functions as a significant pathway in the structural model, its institutional manifestation within schools remains fragile. Qualitative evidence clarifies this tension: policy is experienced less as an enabling regulatory framework and more as declarative intent lacking sufficient procedural specification, authorization mechanisms, and routinized support structures. In this sense, mediation is statistically significant but institutionally attenuated, resulting in only partial translation from culture to practice.

Situating these findings within the Ethiopian reform context further sharpens their interpretation. Educational reforms have often been characterized by strong normative proclamation but comparatively weak procedural detailing and enforcement capacity (Teketel, 2018; Tesfaye, 2020). Consistent with this pattern, Tesaka et al. (2024) and Asrat (2020) document a structural disjuncture between formal legal commitments to inclusion and their practical enforceability, citing weak regulatory frameworks, limited institutional capacity, and constrained resource allocation. Devall-Martin and McHolm (2024) similarly argue that despite constitutional and sectoral anchoring, implementation remains contingent upon infrastructural adequacy, sustainable financing, specialist support systems, and coherent school-level operationalization. Interpreted through this lens, ISP does not disappear as a mediating mechanism; rather, it operates under structural constraint. Inclusive cultural commitments enter the policy layer, but conversion into routinized pedagogical practice is incomplete. Conceptualizing policy as a structurally constrained mediator, functioning more as a bottleneck than a fully enabling bridge, offers a parsimonious explanation for the SEM finding of partial, rather than full, mediation between culture and practice.

5.4.2. Policy Awareness and Implementation: Formal Recognition amid Operational Ambiguity

The findings call for a differentiated interpretation of the policy awareness–usability gap in inclusive education reform. Comparative scholarship shows that awareness of inclusive mandates is often present, yet their translation into operational guidance remains uncertain. Across several Sub-Saharan African contexts, weak dissemination, limited enforcement, and resource constraints widen the distance between formal commitments and classroom enactment (Muhamad, 2026;

Kamchedzera et al., 2010). South African studies similarly report educators' frustration with procedurally opaque policy texts, reinforcing policy visibility without institutional usability (Sepadi & Moshia, 2025). Pinki et al. (2025) describe inclusion as contextual negotiation, where awareness does not stabilize practice, while Maree et al. (2023) link recognition to weak implementation through training gaps and administrative burden. However, middle-income contexts complicate a purely awareness-based explanation. In the Philippines and South Korea, high policy awareness coexists with capacity constraints or strategic reinterpretation (Martin, 2026; Kim et al., 2022). Evidence from India and broader syntheses confirms that legislative commitment alone does not ensure operational readiness (Das & Sarkar, 2025; Sh & Supriyono, 2024), indicating that the awareness–usability divide is structurally mediated.

In the specific case of primary schools in Ethiopia, there is a clearer institutional form to the problem being described. The low and stable PAI scores ($M = 2.51$, $SD = 0.67$, $t(423) = -15.16$, $p < .001$) correlate with descriptions of policy as vague, theoretical, and imposed from above authority (top-down approach). Although teachers do not doubt that inclusive education is a mandatory requirement, they feel unsure about what exactly that requirement entails in terms of assessment practices, accommodation, and classroom management. In other words, policy operates at the formal level of mandate, but fails to manifest itself at the operational level of instructional decision-making. In the process of all types of data collection, the idea of inclusivity is widely supported, but there is no clear translation of it into school-based practices. The national and city-level documents do not outline responsibilities, timetables, and standardized procedures of accommodation. Teachers have no guidelines as to how to identify and accommodate learners, hence implementing policies becomes optional and even subject to quiet gatekeeping.

Within the Ethiopian governance system, where reform often advances through proclamation rather than procedural specification, policy remains formally binding yet organizationally thin. Prior studies equally document teachers' awareness of inclusive mandates alongside uncertainty about implementation pathways (Meskerem, 2017; Teketel, 2018). This reflects a broader implementation dynamic where policy functions more as a legitimacy-oriented compliance signal than as context-sensitive guidance, reinforced by formalistic enforcement and the implementation costs of ambiguity (Zhan et al., 2014; Liu et al., 2018). Under such conditions, policy signals commitment upward while offering limited instructional direction downward. The result is formal

recognition without institutionalized translation: inclusion becomes procedurally vague, unevenly authorized, and fragmented in daily enactment. Without operational clarity and institutional support, policy risks devolve into performative compliance rather than actionable direction.

In the absence of routinized translation mechanisms, teachers become de facto policy interpreters, exercising discretionary judgment consistent with street-level implementation theory. Evidence from Brazil shows that such discretion institutionalizes improvisation through informal negotiation (Oliveira & Peixoto, 2021), while in India, strong policy commitments coexist with uneven enactment due to limited training and resources, heightening professional ambiguity (Chaudhary et al., 2025). Das and Sarkar (2025) similarly report legal mandates alongside weak accessibility infrastructure and low teacher preparation, conditions that expand discretion while narrowing the practical scope of inclusive action. Under these constraints, discretion produces variability and normalizes person-dependent practice. However, discretion is not inherently inequitable. Comparative evidence from Mexico, Vietnam, China, and Finland indicates that when embedded within collaborative and culturally responsive systems, teacher agency can advance equitable reform (Fitriyah, 2025). Thus, discretion's equity effects are structurally mediated—fragmenting practice in the absence of institutional support, yet enabling adaptive inclusion when aligned with coherent administrative and pedagogical frameworks.

Notably, the data identify limited sites where this pattern is partially disrupted. In a small subset of schools, policy became more usable when broad expectations were translated into simple, routinized mechanisms—structured early-year observations, shared placement discussions, periodic follow-up consultations, and engagement with SNE educators. These micro-routines clarified authorization and stabilized expectations, enabling policy to function—locally and precariously—as a mediating layer. Their scarcity underscores the systemic absence of institutionalized translation tools, helping explain both the persistently low ISP mean and the partial mediation effect observed in the SEM model. International evidence reinforces this interpretation. Structured organizational frameworks and mentoring systems can enhance policy coherence and educator efficacy (Stroud et al., 2024), yet structural compliance alone does not guarantee transformation; in South Korea, integration policies coexist with compensatory practices that reproduce exclusion (Kim et al., 2020). Thus, while routinized mechanisms may narrow

policy–practice gaps, their effectiveness depends on the alignment of administrative capacity, professional competence, and pedagogical orientation within specific institutional ecologies.

5.4.3. Organizing Support (OS): Structural Provision amid Systemic Fragmentation

International scholarship consistently demonstrates that structural support systems are central to inclusive education outcomes, though their adequacy and effectiveness vary across contexts. Systematic evidence indicates that deficits in organizational clarity, professional training, and resource allocation constrain the translation of inclusive mandates into practice: unclear roles and limited collaboration among teaching assistants undermine inclusion (Sharma et al., 2016), while inadequate preparation, resource scarcity, and high student–teacher ratios function as systemic barriers across diverse settings (Wang et al., 2026). Even in developed contexts, support systems may operate as compensatory rather than integrative mechanisms, reproducing exclusionary dynamics (Kim, Florian, & Pantić, 2022). Although school-wide reform models and collaborative frameworks show potential (Bray et al., 2020), and effectiveness varies across cultural settings (Strogilos & Avramidis, 2017), robust intervention evidence remains limited. Overall, structural support deficits represent a pervasive yet contextually mediated constraint on inclusive education, with promising but unevenly validated organizational alternatives.

The OS sub-dimension recorded similarly low perceptions ($M = 2.50$, $SD = 0.73$, $t(423) = –14.12$, $p < .001$), indicating systemic fragility in organizing support for SWDs. Teachers reported missing or ineffective inclusion teams, generic and pedagogically disconnected IEPs, and sporadic or absent professional development. Qualitative evidence underscores the consequences of this deficit: formal support operates largely in a reactive, contingency-driven mode, often relying on pull-out approaches that remove SWDs from mainstream instruction—thereby contradicting inclusive principles. Although specialized resources and assistive materials were sometimes available, they were frequently unusable due to inadequate training, poor maintenance, or restricted access. Consequently, support structures such as resource rooms and SNE roles function less as enabling mechanisms and more as symbolic markers of compliance than as integrated systems of pedagogical support.

Empirical evidence from Ethiopian schools shows that although government guidelines formally introduce IEPs, these mechanisms remain weakly institutionalized and inconsistently applied, limiting individualized support (Jaffer, 2018; Getachew, 2025; Teketel, 2018; Tesfaye, 2020). Such arrangements resemble organizational simulacra—structures that signal commitment yet lack the authority, coordination, and resources necessary for classroom-level inclusion, effectively privatizing adaptation onto individual teachers. In this configuration, structure exists without institutional capacity. International studies partly corroborate this pattern: unclear teaching assistant roles and weak collaboration often produce parallel instruction that undermines inclusion and student independence (Sharma et al., 2016). However, inadequacy is not inevitable. A randomized controlled trial in the United States shows that well-designed peer support models significantly improve social participation and academic engagement for students with severe disabilities (Carter et al., 2016). Thus, the effectiveness of support systems depends less on formal adoption than on institutional integration and operational capacity.

The "holds under pressure" findings clarify the mechanism underlying this fragility. Support proved more reliable where core functions were anchored in identifiable roles and recurring routines—such as shared review points, limited SNE–teacher consultation, and coordination with external partners. These micro-structures reduced uncertainty by clarifying responsibility and follow-up. Their localized effectiveness suggests that the challenge is not the impossibility of organizing support, but the absence of routinized governance capable of sustaining it system-wide. What appears as structural presence reflects, at scale, weak institutionalization. International evidence likewise shows that defined roles, structured coordination, and sustained support can strengthen implementation and learning outcomes (Canales et al., 2024; Tournier, Chimier, & Klein, 2025). Yet scalability remains uncertain: decentralization effects are inconsistent (Channa & Faguet, 2016), and capacity-building institutions are often fragile and underfunded (Bennett et al., 2012). Localized gains are therefore possible, but their durability depends on sustained institutional commitment, fiscal continuity, and integration beyond pilot phases.

5.4.4. Policy as Bottleneck, Not Bridge

Various empirical evidence points to policy-related challenges as important factors affecting the implementation of inclusive education, especially in contexts where enforcement mechanisms are

weak, institutional support is limited, and policies are not adequately adapted to local realities. Research conducted in different countries continues to show a gap between policy intentions and what happens in practice. In some cases, schools comply only at a symbolic level because execution remains weak (Lee et al., 2017). Similar concerns have been reported in England and Australia, where schools still struggle to translate inclusive policy into practice (Paliokosta & Blandford, 2010; Carrington et al., 2002). Studies from Ecuador and several developing countries also stress mismatches between policy and local institutional conditions (Bittencourt et al., 2020; Duke et al., 2016). Yet, well-resourced and context-sensitive policies can support better inclusive education implementation outcomes (Dyson & Gallannaugh, 2007; Sh & Supriyono, 2024).

Against this backdrop, the combined PAI and OS findings indicate that ISP in the study context is formally articulated yet weakly institutionalized within everyday school systems. Policy commitments are visible across documents and reporting practices, but their translation into operational procedures, coordinated supports, and routinized accountability remains fragile. Ambiguity in identification, accommodation, and assessment converges with fragmented support structures and compliance-oriented planning. Although focal persons, IEP templates, resource rooms, and referral pathways are formally designated, they remain partially embedded and lack the role clarity, resourcing continuity, and instructional integration required for stable enactment. Policy thus operates less as governing infrastructure than as declarative mandate—authorized in principle yet dependent in practice on local discretion and episodic coordination.

This leads to a central conclusion: ISP does not fully perform its theorized mediating role within the culture–practice relationship. Rather than translating inclusive commitment into predictable implementation, the fragmented character of policy institutionalizes improvisation as the default mode. In this sense, policy functions less as a bridge than as a bottleneck—absorbing aspirational commitments without converting them into authoritative procedures or enforceable supports.

Policy should not, however, be understood as inherently defective. Its limited mediating effect is structurally contingent. Longitudinal evidence from China shows persistent gaps despite policy proliferation (Zhan et al., 2014), while Ohemeng (2010) documents failures of policy transfer under institutional misalignment. Conversely, stronger bureaucratic capacity and governance coherence—evident in Turkey and other institutionalized systems—are associated with improved

outcomes (Luca et al., 2016). The constraint lies not in policy as such, but in the institutional conditions through which it operates.

Within the logic of conditional inclusion, policy functions sporadically where localized routines temporarily render it usable. Because these routines remain uneven and weakly institutionalized, inclusion practice remains contingent rather than systemic. Global studies reinforces this pattern: studies across Australia, New Zealand, the UK, and parts of the Arab region document tensions between administrative priorities and inclusive principles, reliance on individualized adjustments, and uneven reform trajectories (Armstrong et al., 2011; Collins, Azmat, & Rentschler, 2019; Alkhateeb, Hadidi, & Alkhateeb, 2016). Although enabling conditions and context-specific progress are documented (Limbach-Reich et al., 2015; Gut, 2012), formal adoption alone does not reliably yield organizational transformation without durable institutional routines.

5.5. Inclusive School Practices: Pedagogical Agency in Structural Constraint

5.5.1. Practice as the Point of Systemic Failure

The quantitative findings identify ISPr as the weakest of the three inclusion dimensions ($M = 2.49$, $SD = 0.64$, $t(423) = -16.17$, $p < .001$), signaling not merely an instructional deficit but the downstream manifestation of broader systemic fragility. Practice appears weakest because it absorbs the cumulative effects of aspirational culture and weakly operationalized policy. Integrated analysis shows that classroom practice serves as the system's operational interface, where upstream deficiencies become materially consequential. Qualitative evidence reframes this statistical result as the point at which structural weaknesses converge to constrain—and at times overwhelm—individual pedagogical agency. Classroom practice is, therefore, not an independent locus of failure, but the arena in which institutional decoupling is enacted through everyday instructional decisions. ISPr, thus, offers a clear diagnostic lens for understanding how inclusive intent is either translated into true participation or foreclosed within the schooling's lived realities.

These findings align with broader scholarship on inclusive education implementation. Grima-Farrell et al. (2011) show that advances in evidence-based inclusive practice often fail to become routinized, underscoring reform fragility. Yoo and Bal (2025) identify cross-level systemic contradictions that sustain exclusionary dynamics, while Naraian (2014) reveals how teachers

navigate competing institutional discourses, positioning practice as the site where structural tensions crystallize. Together, this literature supports interpreting ISPr as the pedagogical expression of systemic strain. Yet the structure–practice relationship is not deterministic. Li and Ruppar (2021) conceptualize teacher agency as multidimensional and context-dependent, and Mustafa (2025) documents adaptive resistance and informal support networks emerging through localized pedagogies. Classroom practice, therefore, operates as a negotiated space in which institutional constraints are both reproduced and reworked. The weakness of ISPr in the present study is thus best understood as conditional enactment under structural constraint—where professional agency persists but remains embedded within fragile institutional scaffolding.

5.5.2. Teaching–Learning: Systemic Constraint and the Dominance of Coping Pedagogy

Quantitative results show persistently low perceptions of inclusive TL practices ($M = 2.58$, $SD = 0.64$, $t(423) = –13.54$, $p < .001$), reinforced by qualitative evidence of reactive adaptation, limited differentiation, and rigid, text-dominant assessment. Together, these findings suggest that under coverage-driven accountability regimes, TL becomes the site where systemic pressures crystallize into patterned instructional exclusion, restricting pathways for students—particularly those with high support needs—to access content or demonstrate understanding. FGDs, KIIs, observations, and document review indicate that tightly paced curricula, high-stakes examinations, and limited collaborative planning displace inclusive pedagogy in favor of syllabus completion and short-term manageability. Planning becomes completion-driven, differentiation narrows to simplification, participation is weakly routinized, UDL remains largely discursive, and assessment operates more as a regulatory filter than as an adaptive mechanism.

This implementation gap extends beyond the present context. Molina et al. (2025), analyzing 5,348 classroom observations across eight countries, show that high instructional time-on-task rarely translates into inclusive quality. Adu-Boateng and Goodnough (2021), Marchan et al. (2025), and Koutsouris, Bremner, and Stentiford (2023) similarly identify curriculum rigidity, assessment pressures, overcrowding, inadequate training, and resource scarcity as structural barriers. These constraints do not imply pedagogical incapacity: Sharma (2024) demonstrates that UDL improves engagement when implemented with fidelity, and Brennan et al. (2019) show that sustained

professional development strengthens inclusive practice. Thus, TL weakness reflects constrained environments rather than ineffective pedagogy.

Within such conditions, instructional practice gravitates toward what this study terms coping pedagogy. Consistent with Ethiopian evidence (Belay et al., 2015; Getachew, 2018), inclusive intentions remain thinly embedded as adaptations rely on individual initiative amid weak professional learning and fragmented resources. Local scholarship documents inadequate training, limited differentiation capacity, infrastructural deficits, and policy–practice misalignment (Meskerem, 2017; Kebede & Phasha, 2024; Tamirat & Xiaoduan, 2021; Tadesse, 2016; Getahun, 2020; Asrat, 2020; Tesaka et al., 2024; Matheas, Tamirat, & Ambissa, 2025). Similar patterns appear internationally, where compliance and classroom control displace responsive instruction (Westbrook & Croft, 2015).

Coping pedagogy, however, should not be treated as evidence of pedagogical deficiency, but rather as a context-responsive adaptation to structurally constrained teaching conditions. A recent systematic review of 28 studies (2012–2024) affirms that adaptive expertise—balancing procedural competence with flexible, context-sensitive problem solving—is essential for addressing diverse learner needs (Serriere & Daniela, 2025). Candrawati and Purbani (2025) identify six principal coping strategies in low-resource contexts, including curriculum improvisation adapted to local realities, demonstrating that improvisation can reflect professional adaptability rather than inadequacy. Bale (2022) further argues that spontaneous responsiveness to learners cultivates adaptive expertise, while Sorensen (2022) reconceptualizes teacher expertise itself as inherently improvisatory. Taken together, this scholarship suggests that improvisation under constraint is often a professionally rational response within structurally limited environments. The problem lies less in teachers' adaptive efforts than in the fragility of the institutional conditions within which those efforts must operate.

The "holds under pressure" findings clarify the narrow conditions under which inclusive TL practices achieve relative stability. In a small subset of schools, early identification was translated into shared classroom micro-routines—including strategic seating, structured peer support with oral checking, predictable lesson sequencing, and alternative response modes—reducing reliance on last-minute improvisation and enabling adaptation within coverage-driven pacing and large-

class constraints. This localized stabilization aligns with Morningstar et al. (2015), who show that schools implementing coherent, school-wide inclusive policies demonstrate observable instructional supports such as coordinated staffing, peer-assisted structures, and UDL, and with Brent et al. (2017), who emphasize that structured routines and explicit feedback are empirically robust yet frequently underutilized. At scale, however, implementation remains uneven, as Molina et al. (2025), Marchan et al. (2025), and White, Lowery, and Johnson (2025) illustrate through persistent structural barriers. Sustainable inclusion, therefore, depends on institutionalized, collectively supported routines rather than isolated teacher effort. Their rarity in the present study explains both the low TL mean and the continued dominance of coping pedagogy, indicating that the central challenge lies in weak institutionalization rather than absent inclusive intent.

5.5.3. Resource Provision (RP): The Materialization of Inequality

Inclusive RP practice emerged as the weakest inclusion sub-dimension ($M = 2.38$, $SD = 0.75$, $t(423) = -16.92$, $p < .001$), a finding consistently reinforced by qualitative evidence. Teachers reported material scarcity, inaccessible classrooms, and limited functional assistive technologies that directly constrain participation for SWDs, particularly those with high support needs. More fundamentally, RP functions as the material site where systemic constraints crystallize into participation boundaries. Observations and document review reveal not only shortages but a pronounced availability–usability gap: large-print textbooks and adapted furniture are often absent, and assistive devices, when present, frequently remain unusable due to weak maintenance systems, limited training, and restrictive controls. FGDs further indicate that resource centers operate as symbolic or restricted spaces, communication access for deaf learners is unreliable, and unsuitable physical situations normalize partial participation and, at times, in-school segregation.

Previous findings from Ethiopia mirror this trend. Some studies have documented the scarcity of learning aids, assistive devices, and accessible classrooms in primary schools. Despite having access to some tools, it has been reported that teachers often lack proper knowledge on how to utilize them for effective classroom teaching (Abebe et al., 2023; Esayas et al., 2025). A study by Franck and Joshi (2017) has also cited the lack of instructional materials. On the other hand, Aderie's (2016) study’s findings indicated that several schools in Addis Ababa had physical barriers to delivering inclusive education practices. The study conducted by Ermias and Belay

(2024) also observed the scarcity of braille books among visually impaired children. Meanwhile, according to the findings of Taddese and Dawit (2019), there were no interpreters in sign language among deaf children. Finally, Meskerem (2017) also noted the underutilization of assistive technology in classroom settings. Global studies similarly show continuing gaps between resource provision and classroom utilization (Singal, 2016; Hai & Ineland, 2023).

Material conditions thus function not as passive limitations but as mechanisms through which inequality is reproduced for SWDs. The absence of ramps excludes wheelchair users from shared spaces, while routinized pull-out resource rooms may reinforce segregation and dependency. Across KIIs, observations, and document review, resources are often outdated, locked, curriculum-misaligned, or rendered non-functional by weak maintenance and financing systems. Procurement and budgeting remain unpredictable; upkeep is underfunded; and governance routines for inventory and monitoring lack continuity. Observation and document data further show uneven disability-specific provision and weak instructional integration, with inventory rarely linked to replenishment or outcome tracking.

The "holds under pressure" findings illuminate the narrow conditions under which provision becomes enabling. In some schools, simple management routines enhanced the predictability of access: sign-out systems clarified responsibility, and periodic review cycles linked materials to instructional need. Such practices stabilized usability amid scarcity, indicating that the core barrier lies less in absolute shortage than in weak institutional coordination. RP enactment thus remains fragile and uneven; under these conditions, provision functions as a structural mechanism that reproduces unequal participation in everyday practice. This interpretation is supported by Sutter, Bhatt, and Qureshi (2022), who show that shared access schemas—enacted through practices such as precedence and scaffolding—shape how materials are used in constrained settings. Lampert, Boerst, and Graziani (2011) similarly demonstrate that resources become pedagogically effective only when embedded in shared routines and coherent instructional frameworks, underscoring that systems matter more than supply alone. Extending this institutional lens, Hayes et al. (2025) highlight how formal rule structures—governing membership, agenda-setting, information access, and decision aggregation—shape participation in resource management, yet remain underleveraged as intervention points.

5.5.4. Operational Enactment under Instructional and Material Constraint—Fragile Stabilization of Participation

Together, TL and RP indicate that ISPr is operationally enacted yet not institutionally secured within everyday school systems. Under coverage-driven accountability pressures, instructional planning prioritizes syllabus completion and classroom manageability, resulting in reactive inclusion, simplified differentiation, weakly routinized participation, and assessment practices that function more as regulatory filters than as adaptive tools. Professional effort is strategically allocated within constrained temporal and material conditions, generating a patterned logic of pedagogical prioritization. Material constraints further delimit instructional possibilities. Resources remain inconsistently usable—scarce, misaligned, restricted, or rendered non-functional through weak maintenance, unpredictable financing, and under-embedded governance routines. Adaptations, therefore, remain improvised, coordination episodic, and inclusion dependent on individual initiative rather than stabilized institutional systems. The partial mediation observed in the structural model reflects a conditionally enacted system—sustained through fragile "holds under pressure" rather than secured through coherent policy translation and infrastructural reliability. ISPr thus represents not the institutionalization of inclusive pedagogy, but its contingent stabilization under interlocking instructional and material constraints.

This interpretation is reinforced in the broader literature. Ojeme and Destiny (2023) document a persistent gap between inclusive intent and classroom enactment, with implementation relying more on individual effort than structured school support. Destiny and Lator (2024), reviewing 48 studies, similarly attribute the paper-to-practice divide to capacity and resource constraints rather than resistance to inclusion itself. Salazar-Alcivar et al. (2025) further highlight tensions between inclusive rhetoric and entrenched school practices. Collectively, this scholarship corroborates the present findings: inconsistent inclusion reflects weak institutionalization rather than absent professional goodwill.

5.6. The Stabilizing Role of Routinization: What Holds Under Pressure across Domains

Having examined the manifestations of inclusion within culture, policy, and practice, a consistent explanatory pattern emerges across all three domains: inclusion persists under pressure not through abundant resources or complex programs, but through its routinization into predictable, low-discretion practices. This cross-domain mechanism provides a critical lens for interpreting the quantitatively measured deficits in inclusivity (ISC M = 2.75; ISP M = 2.50; ISPr M = 2.49). It moves the analysis beyond documenting what is absent to explaining the precarious mechanisms of what partially remains, clarifying why inclusion neither collapses entirely nor consolidates system-wide. In doing so, it defines the operative substance of what this study conceptualizes as conditional inclusion. The closest supporting evidence comes from Crespo et al. (2013), whose review of 39 studies showed that routines and rituals can function as stabilizing resources that sustain adaptation under strain. More recent studies likewise point to the importance of structured inclusion mechanisms, including White et al. (2025) and Bernstein and Salipante (2025), although neither explicitly examines routinization under resource pressure or conditional inclusion.

Within ISC, the practices that held—predictable parent contact, consistent responses to teasing, calendared awareness events—functioned as rituals of moral commitment. They routinize inclusive values into socially visible, repeatable actions, reducing reliance on episodic individual virtue. This explains the relative resilience of the value-affirmation (EIV) compared to BC: culture can sustain itself symbolically through routine, even as it struggles to institutionalize deeper normative enforcement. Routinization thus allows values to remain legible under pressure, while leaving belonging contingent and uneven. Related studies likewise suggest that routinized practices can stabilize values and belonging: Rossano (2012) links ritual to the reinforcement of social norms; Cook et al. (2012) shows that values affirmation can make belonging less performance-contingent; and Fajriyah et al. (2025) and Safaqi and Kusuma (2025) show that embedded ethical routines can sustain school culture, though multi-level support remains crucial.

This logic of routinization directly enables—and constrains—the structural link between culture and policy. The strong quantitative pathway from ISC to ISP ($\beta = .609$) is operationally realized through what teachers described as “routinized translation”: the conversion of abstract policy

expectations into simple, school-level micro-routines (e.g., shared observation timelines, periodic consultation). Where this translation occurs, policy sheds its ambiguity and becomes a usable tool, reducing the hesitation that otherwise cripple implementation under workload pressure. Where it is absent, policy absorbs inclusive intent without releasing it into practice, explaining both the low ISP mean and the partial, rather than full, mediation observed in the structural model. This interpretation is consistent with Andersson (2022), Sausman, Oborn, and Barrett (2016), and Bateman and McDonald (2023), who show that policy becomes actionable through translated and routinized organizational practices supported by mediating actors such as learning events and communities of practice. Sandfort and Moulton (2020) provide the theoretical basis for this process, although none of these studies quantify pathway strength as in the present finding.

Unsurprisingly, inclusive practice was most consistently reported in settings where it had also become routinized. In TL, this meant embedded micro-adaptations such as strategic seating and predictable response modes; in RP, it meant basic governance routines such as sign-out systems and scheduled review. These routines serve as microsystem-level stabilizers in bioecological terms, creating pockets of predictability that compensate for exosystemic resource gaps and macrosystemic pressures such as examination accountability. The starkly low score for RP ($M = 2.38$) underscores that without even minimal management routines, existing materials become functionally inaccessible, rendering scarcity an organizational outcome rather than a purely material one. Comparable studies reinforce this point. Stelitano, Russell, and Bray (2020) show that daily routines shape student support, though not always inclusively. Okyere et al. (2019) situate implementation across interacting system levels, while Bölte et al. (2021) document a major ambition–practice gap. Together, these studies suggest that routines matter, although direct evidence of their compensatory effect under resource constraints remains limited.

Across domains, inclusion persists through these low-discretion, routinized practices: calendared awareness events in Culture, shared observation timelines in Policy, and predictable classroom adaptations in Practice. These informal, localized routines allow inclusion to “hold” in specific pockets, reflecting compensatory mechanisms rather than system design. While they sustain participation under pressure, their weak institutionalization prevents generalization, creating a stable but conditional form of inclusion—resilient in specific contexts yet inherently fragile at the system level. This broader interpretation also resonates with evidence showing that formal

inclusion can coexist with compensatory routines that weaken meaningful participation (Stelitano et al., 2020), that localized inclusion may persist as an "island" under weak institutionalization (Olszewska, 2025), and that paper-to-practice gaps remain pronounced where mandates are undermined by weak enforcement and inadequate funding (Destiny & Lator, 2024). Hailemariam et al. (2019) similarly identify funding and resource shortages as key barriers to sustainment. These patterns also align with implementation science, which emphasizes routine integration and core components as central to intervention sustainability in low-resource settings (Fixsen et al., 2005).

Taken together, these cross-domain patterns suggest that routinization operates as the core mechanism through which conditional inclusion is sustained. The Index for Inclusion framework helps clarify why culture, sustained through symbolic routines, can appear somewhat more robust, while policy and practice—requiring operational translation—remain more fragile. Crucially, the routines that stabilize inclusion are largely informal, localized, and weakly institutionalized, operating as compensatory mechanisms rather than as features of system design.

In this configuration, inclusion for SWDs is neither systematically present nor absent; it is conditionally present where such routines have crystallized through local effort. It holds under pressure in specific pockets but fails to generalize, remaining vulnerable to shifts in personnel, priority, or pressure intensity. This study conceptualizes this state as conditional inclusion: a system in which broad commitment is consistently affirmed, yet consistent enactment is routinely constrained, surviving primarily in the stabilized form of decentralized, fragile routines rather than through resilient institutional infrastructure. Dismantling conditional inclusion, therefore, requires moving beyond reliance on fragile, school-level micro-routines toward their deliberate institutionalization across meso- and exosystem levels—a challenge that frames the policy, organizational, and capacity-building implications developed in Chapter Six.

5.7. Integrated Interpretation of Structural and Mediating Relationships in Theoretical Context

Considered beyond statistical significance and situated within existing theoretical and empirical scholarship, the Culture → Policy → Practice chain (ISC → ISP → ISPr) represents the theoretical ideal of a coherent system for the inclusion of SWDs. This interpretation is consistent with the

Index for Inclusion, which conceptualizes culture, policy, and practice as mutually reinforcing rather than separable domains (Booth and Ainscow, 2000, 2002, 2011). While the quantitative structural model confirms strong and significant relationships among these dimensions, the qualitative evidence explains why this coherence remains largely aspirational in practice. The Culture → Policy link (ISC → ISP) is compromised not by an absence of inclusive values and relational commitments, but by the failure to translate aspirational commitments into enforceable rules, routinized procedures, and accountable structures. This aligns with wider evidence that inclusive cultures may generate ethical commitment, but that commitment does not reliably convert into practice unless it is operationalized through coherent policy, resourcing, and school-level routines (Zabeli & Gjelaj, 2020; Sánchez et al., 2019; Fiuza-Asorey et al., 2021).

Comparative empirical findings reinforce this interpretation. Colombi Evangelista et al. (2025), Carrington and Elkins (2002), Tesaka et al. (2024), and Pocock and Miyahara (2018) collectively show that inclusive policy often remains symbolically endorsed but weakly operationalized: formal commitment outpaces enforceable rules, routinized procedures, structural support, and implementation capacity, leaving the Culture → Policy → Practice chain aspirational rather than coherently enacted. Similarly, the Policy → Practice link (ISP → ISPr) is undermined by the symbolic character of policy and the fragmentation of support systems, which together prevent policy from functioning as a reliable mediating mechanism. In this respect, the present findings are also consistent with Ethiopian and comparative evidence showing that when policy remains abstract, weakly communicated, or under-resourced, inclusion is experienced less as an institutional routine than as an individualized burden borne by teachers (Genovesi et al., 2024; Tsigie, 2022; Aemiro, 2025).

The persistence of a direct Culture → Practice pathway (ISC → ISPr), evident in the finding of partial mediation, reveals the system's continued dependence on teacher moral agency and defensive improvisation. This is consistent with literature suggesting that inclusive cultural orientations can shape classroom enactment directly, but usually in fragile and contingent ways. Studies indicate that cultural endorsement may coexist with exclusionary peer dynamics, uneven participation, or only partial integration when institutional supports are weak (Budiarti & Sugito, 2018; Fiuza-Asorey et al., 2021). Qualitative evidence in this study indicates that this pathway is

sustained not only by individual commitment, but also by a limited set of fragile “holds under pressure” routines that temporarily stabilize practice in the absence of effective policy mediation.

It therefore reflects the sustained, and often draining, effort of individual practitioners attempting to compensate for systemic policy failure. Such agency-in-isolation aligns with global empirical research documenting how teachers sustain moral purpose in restrictive environments, frequently at considerable personal and professional cost (Priestley et al., 2015). Comparable studies sharpen this interpretation. Mustafa (2025), Fitriyah (2025), Biesta, Priestley, & Robinson (2015), Tebeje & Andrea (2020), and Tucker (2022) collectively show that when institutional mediation is weak, teachers rely on moral agency, informal networks of support, adaptive resistance, and creative adaptation to navigate policy–practice dissonance. Yet such defensive improvisation remains difficult to sustain without collective institutional support and authentic collaboration under structurally restrictive conditions.

The resulting meta-inference is that the system is architecturally predisposed toward episodic and conditional inclusion, particularly for SWDs requiring high levels of support. While its design permits the inclusion of students with milder needs through extraordinary teacher effort and goodwill, occasionally reinforced by weakly institutionalized stabilizing routines, it systematically fails for those with more complex needs because operational resilience is absent, mainly in the form of procedural clarity, coordinated support, and functional resources. This interpretation is consistent with the broader review synthesis, which suggests that inclusion moves beyond formal enrolment only when cultural commitments, operational policies, and classroom practices converge in ways that make teacher agency both feasible and sustainable (Booth & Ainscow, 2011; Burningham et al., 2024). Where that convergence does not occur, the system may still generate pockets of inclusion, but these remain fragile, uneven, and highly dependent on local effort.

This reading is further supported by evidence that formal inclusion commitments often fail to translate into genuinely inclusive daily practice. Stelitano et al. (2020), Kurto and Asaro-Saddler (2025), Jahyun Yoo et al. (2025), and Wang (2026) collectively show that despite strong teacher commitment and the promise of evidence-based approaches, exclusion persists through unclear implementation, fragmented collaboration, inadequate support, entrenched ideologies, and resource constraints. In this way, a structure that appears robust in statistical terms proves brittle

in practice, converting what should function as an enabling institutional pathway into a cycle of professional improvisation and inequitable outcomes.

5.8. Interpreting Demographic Patterns: A Diagnostic Analysis of Systemic Capacity

The observed demographic patterns function as diagnostic indicators of the structural features and systemic capacities shaping inclusive practices. Rather than serving as isolated background variables, they show how inclusive education is differently perceived across teacher groups and, in doing so, expose both strengths and stress points within the system. This interpretation is consistent with Weiss et al. (2019), Buslon et al. (2025), Woodcock and Anderson (2022), and Loreman, Sharma, and Forlin (2013), who collectively suggest that demographic variables do not directly determine inclusive practice, but instead illuminate underlying differences in professional development, institutional support, teacher preparation, self-efficacy, and direct experience.

Gender-based differences were evident across all three inclusion dimensions, with female teachers reporting significantly higher perceptions of inclusive culture, policy, and practice than male teachers. While the present data cannot establish causal mechanisms, this pattern may reflect socially constructed professional norms that differentially emphasize relational, affective, and caregiving roles—an area warranting deeper qualitative and intersectional investigation. These differences do not necessarily indicate unequal access to institutional support; rather, they may reflect variation in how teachers mobilize relational labor within structurally constrained environments. This interpretation is consistent with Singh, Jain, and Yadav (2025), who found that female teachers report more positive orientations toward inclusive education than male teachers, in line with theoretical accounts linking femininity to caregiving and relational labor (Thébaud et al., 2024; Warin & Gannerud, 2014). However, contrary evidence from Norwegian higher education shows men perceiving their organizations as more inclusive, suggesting that gendered patterns remain context-dependent (Innstrand & Grødal, 2021).

By contrast, educational qualification showed no statistically significant relationship with perceptions of ISC, ISP, or ISPr. The absence of significant differences between diploma- and degree-holding teachers suggests that formal certification alone does not meaningfully shape

inclusive perceptions in this context. This finding indicates that the system does not appear to generate stronger inclusive capacity simply through higher credential attainment and, in practical terms, raises questions about whether pre-service preparation, regardless of qualification level, adequately equips teachers for inclusive work. The literature offers a mixed but broadly supportive picture. Hsien, Brown, and Bortoli (2009) found that specialized qualifications in special education were associated with more positive views of inclusion, but this does not necessarily extend to general diploma–degree differences. By contrast, Forlin and Chambers (2011), Mazzuki et al. (2024), and Muhammad (2025) suggest that credentials alone are insufficient unless combined with field-based and authentic teaching experience.

A similar pattern emerged for age, which showed no statistically significant differences across any of the three dimensions. This suggests that inclusive perceptions are not meaningfully differentiated by life stage or generational position. In other words, neither older nor younger teachers appear systematically advantaged in how they understand or assess inclusive culture, policy, and practice. This further strengthens the interpretation that inclusion in this context is shaped less by broad personal attributes than by more specific forms of professional exposure and support. Although evidence on age is mixed, the broader literature still suggests that professional development, training, confidence, and field exposure are more decisive for inclusive practice. Triviño-Amigo et al. (2022), for example, found that older and more experienced teachers reported lower perceived preparation for inclusion, suggesting that age may matter more than the present findings indicate. However, Sh and Supriyono (2024), Chow et al. (2023), and Selin and Miller (2020) also show that professional development, training, confidence, and field exposure remain more decisive for inclusive practice.

Teaching experience, on the whole, demonstrated significant discrepancies, especially for ISPr, where less experienced teachers had lower perceptions regarding inclusivity. Nonetheless, the extent of the differences was still much smaller compared to the effect produced by actual experience teaching students with special needs. This indicates that the overall level of experience may have some relevance to one's ability to perceive inclusiveness, at least with respect to practice, but that the mere age of professional experience is not sufficient to guarantee such competence. The more important factor seems to be the kind of experience gained. According to Foykas et al. (2025), years of service were only connected with attitudes, whereas SEN experience contributed

to better skills in managing the classroom and cooperation. Similarly, Sokal and Sharma (2017) argue that experience is most helpful when complemented by relevant training, even though experiences in Cambodia point out that the connection may still depend on the situation (Kuroda, Kartika, & Kitamura, 2017; Fajardo et al., 2025).

In this respect, teachers' direct experience of teaching SWDs emerged as the strongest and most consistent predictor of positive perceptions across all three inclusion dimensions, with particularly pronounced effects on perceptions of practice (ISPr). This finding suggests that inclusive pedagogical competence is cultivated primarily through sustained, proximate classroom experience rather than through formal educational qualifications. Within the logic of this study, such experience operates as a compensatory mechanism, enabling teachers to develop informal coping strategies and micro-routines that allow inclusion to hold under pressure in the absence of institutionalized supports. This interpretation is supported by local studies showing that teachers with hands-on experience express greater confidence and fewer reservations about inclusion (Mahider, 2013). At the same time, the pattern is double-edged: it highlights the value of experience-rich learning while also revealing a system that depends heavily on situated adaptation rather than deliberately structured preparation. This broader interpretation is consistent with Avramidis and Kalyva (2007), who found that teachers with direct experience teaching students with SEN held more positive attitudes toward inclusion. However, more recent evidence suggests that experience alone is insufficient: Foykas et al. (2025) and Shuakbayeva et al. (2025) indicate that self-efficacy, training, and supported mastery experiences are critical for translating experience into inclusive competence.

The progressive decline in positive perceptions as the perceived severity of student disability increases reflects more than attitudinal bias; it signals structural and organizational thresholds within the system. Teacher perceptions in this regard are diagnostic, revealing the point at which existing resources, professional supports, and preparatory frameworks become insufficient to meet more complex needs. Notably, this decline persists even among experienced teachers, indicating that while experiential routines may stabilize inclusion for students with mild to moderate needs, they fail to hold under pressure when support complexity exceeds the system's informal adaptive capacity. This interpretation is consistent with Ethiopian evidence showing that teachers are least prepared, and often most hesitant, when including students with intellectual, sensory, or multiple

disabilities, precisely where systemic supports are weakest (Belay et al., 2015; Zelalem, 2018). More broadly, local studies show that although teachers often endorse inclusion in principle, implementation remains constrained by inadequate preparation, limited materials, weak institutional readiness, inaccessible environments, and shortages of skilled support (Tamirat & Xiaoduan, 2021; Negash & Yadavalli, 2020; Franck & Joshi, 2017). Aldabas (2020) similarly shows that teacher confidence declines most sharply for students with intellectual and multiple disabilities, reinforcing the severity-threshold interpretation.

Collectively, these demographic profiles provide a useful diagnostic lens on the inclusive education system. They show that inclusive perceptions are shaped less by formal qualification or age than by situated experience, especially direct engagement with SWDs. They also reveal important stress points, particularly the system's constrained capacity to support students with severe disabilities and the limited ability of general teaching experience to substitute for targeted inclusive preparation. Together, the findings suggest that advancing inclusion requires a deliberate shift toward experience-rich professional development, targeted pre-service and in-service preparation, and differentiated support structures calibrated to varying levels of need, so that inclusive practice does not depend primarily on individual teachers' accumulated coping capacity, but is sustained by institutionalized routines capable of holding under pressure across contexts.

Together, these demographic profiles provide a useful diagnostic lens on the inclusive education system. They suggest that inclusive perceptions are shaped less by formal qualification or age than by situated experience, especially direct engagement with SWDs, while also exposing key stress points, particularly the system's constrained capacity to support students with severe disabilities and the limited value of general teaching experience in the absence of targeted preparation. Taken together, these findings and the wider literature indicate that advancing inclusion requires experience-rich professional development, targeted pre-service and in-service preparation, and differentiated support structures calibrated to varying levels of need, so that inclusive practice is sustained through institutionalized routines rather than relying primarily on teachers' accumulated coping capacity. This interpretation is reinforced by evidence that one-time training and weak pre-service preparation are inadequate without sustained professional development and accessible institutional support (Tuerah, 2025; Ajani and Ntombela, 2025), that inclusion becomes most

difficult for students with significant disabilities (Kroesch & Peeples, 2021; Aldabas, 2020), and that preparedness is closely linked to targeted inclusive coursework (Zagona et al, 2017).

5.9. Cross-Phase Synthesis: Conditional Inclusion as a System–Student Mismatch

5.9.1. The Core Contradiction

The integrated synthesis crystallizes the central contradiction underpinning this study: clear evidence of teacher goodwill, ethical commitment, and professional intent coexists with equally clear evidence of systemic incapacity. Across both the quantitative and qualitative phases, educators expressed support for inclusion and a willingness to engage in inclusive practice for SWDs. However, these individual commitments are enacted within institutional environments that lack the structural coherence, resources, and coordination required to sustain inclusion as routine practice. This pattern is consistent with wider scholarship showing that, although inclusion is widely endorsed in principle, it remains difficult to enact in practice. Teachers frequently cite limited competence, inadequate resources, fragmented collaboration, and unsupportive organizational cultures as major barriers (Pocock & Miyahara, 2018; Tuerah, 2025; Yoo & Bal, 2025). Across contexts, the literature therefore suggests that policy commitment alone is insufficient; meaningful inclusion requires sustained, multi-level reform.

Accordingly, the primary impediment to the inclusion of SWDs is not teacher resistance or indifference, but a persistent mismatch between individual agency and systemic capacity. In this context, inclusion is sustained by committed actors operating within structurally misaligned and operationally fragile arrangements. The qualitative evidence further indicates that inclusion persists only because a limited set of weakly institutionalized routines temporarily stabilizes participation and belonging under pressure. These routines, however, do not resolve the underlying structural misalignment that defines the system, leaving inclusion conditional, uneven, and inherently vulnerable to contextual pressures. This interpretation is reinforced by literature that foregrounds systemic, rather than primarily attitudinal, constraints on inclusion. Teacher agency is shaped by enduring structural conditions, including limited institutional support, inadequate professional development, weak organizational arrangements, and systemic misalignment (Collins, Azmat, & Rentschler, 2019; Li &Ruppar, 2021; Miller et al., 2022; Naraian, 2014). While

training can improve attitudes, structural barriers remain primary (Tristani &Bassett-Gunter, 2019).

This pattern also resonates with Ethiopian educational research, which consistently shows teacher commitment operating under severe structural constraints (MOE, 2012b, 2022). The central contradiction is therefore clear: strong teacher goodwill coexists with systemic incapacity, and inclusion persists largely because individual agency compensates for institutional weakness through ad hoc routines and personal coping strategies. Comparable dynamics are evident in wider empirical literature, including studies from Ethiopia, where teachers pursue inclusion through pragmatic negotiation within troubled systems despite inadequate preparation, weak governmental commitment, limited structural support, scarce resources, and poor institutional collaboration (Kebede & Phasha, 2024; Naraian, 2014; Pather, Tadesse, & Gizachew, 2021; Tesaka et al., 2024; Wondwosen, Yitayal, & Semahegn, 2014; Zelalem, 2018).

5.9.2. The Vicious Cycle of Conditional Inclusion

This contradiction is neither incidental nor static; rather, it is institutionalized and reproduced through a self-reinforcing cycle that normalizes conditional inclusion for SWDs over time. Weak or predominantly symbolic policy frameworks, coupled with fragmented support structures, institutionalize improvised practice as the default professional mode. As a result, inclusion for SWDs becomes dependent on individual discretion rather than systemic design. Where inclusion is sustained, it is typically mediated through localized micro-routines, such as informal parent engagement, awareness activities, or ad hoc classroom adaptations that absorb pressure without transforming the conditions that produce that pressure. This interpretation is supported by studies showing that special education remains weakly connected to general education and marked by variable inclusion practices (Sailor et al., 2005), while enduring paradoxes continue to obstruct coherent inclusive provision (Connor et al., 2007). Recent studies suggest that these contradictions persist in inconclusive placement outcomes and the continued segregation of many students with intellectual and developmental disabilities despite inclusive policy mandates (Fuchs et al., 2025; Wehmeyer et al., 2020).

While such improvisation may accommodate students with mild support needs, it is inherently unstable for those with high or complex support needs. The predictable difficulties encountered in supporting these students are then interpreted, not as evidence of systemic failure, but as confirmation of deficit-oriented assumptions, thereby reactivating medical-model logics. In turn, such interpretations rationalize exclusionary practices and legitimize continued investment in symbolic rather than operational policy responses. These same interpretations also preserve minimal stabilizing routines that create the appearance of inclusion without securing its substance, thereby insulating the system from substantive reform. This pattern is reflected in wider scholarship showing that systemic contradictions continue to reproduce exclusion in inclusive education. Individualistic ideologies, fragmented collaboration, inadequate resources, oppressive discourses, and routinized school practices marginalize SWDs even where inclusion is formally endorsed (Stelitano et al., 2020; McDonnell, 2003; Reeves et al., 2020; Yoo & Bal, 2025).

This recursive sequence—weak policy → improvised practice → failure for complex or high support needs → rationalized exclusion → symbolic policy—reflects a classic negative policy feedback dynamic (Pierson, 1993, 2004), in which outcomes reproduce the conditions that generated them. This pattern is consistent with evidence that broad policy commitment often outpaces operational delivery; Brown et al. (2007), for instance, show that implementation is undermined by capacity limitations and weak sectoral linkages despite explicit governmental commitment. Within this loop, deficit discourse (Valle & Connor, 2011) operates both as product and driver, obscuring the structural origins of failure while stabilizing exclusionary practices, although existing implementation studies more readily document failure than its discursive rationalization (Mitchell & Xavier, 2017; Van Wijk et al., 2019). The cycle is evident in Ethiopia, where policy responses reiterate commitment without resolving operational failure (Getachew, 2025). Meanwhile, fragile routines that prevent collapse may also inhibit reform by creating an illusion of functionality, echoing Cochrane et al.'s (2016) finding that apparent programme effectiveness can coexist with deeper structural dysfunction.

In contrast to the "virtuous cycles" observed in systems where early successes catalyze institutional learning and cumulative reform (Ainscow & Sandill, 2010), the dynamic here is regressive. Rather than producing cumulative transformation, inclusive education appears repeatedly to reproduce symbolic commitment under conditions of systemic constraint. Slee (2014), for example, argues

that inclusion can paradoxically function to manage populations perceived as threatening institutional equilibrium rather than transform the system itself. Similarly, Sailor (2017) notes that inclusion has remained sporadic and elusive despite decades of global policy effort, while Shaw (2021) shows that disabled students in the UK continue to face elevated risks of withdrawal and poorer outcomes despite a long history of inclusion-oriented policy. More recent evidence likewise indicates that even where effective practices are known, their implementation is constrained by inadequate training, resource limitations, and high student–teacher ratios (Wang, 2026). Taken together, these studies suggest that the system remains locked in an equilibrium of conditional inclusion, accommodating individual commitment in principle while systematically constraining its translation into equitable and sustainable practice, particularly for those students whose needs most starkly expose systemic inadequacies.

5.9.3. The Overarching Meta-Inference

The integrated analysis culminates in a clear conclusion: the fundamental impediment to inclusive education for SWDs in the studied context is not a deficit of teacher goodwill or professional commitment, but the systemic absence of operationally resilient institutional routines beyond fragile "holds under pressure" practices. The overarching meta-inference generated by this mixed-methods study is that, in selected public primary schools of Addis Ababa, inclusion functions not as an institutionalized practice but as a fragile, teacher-dependent project, sustained largely through individual agency and moral effort, supplemented by weakly embedded routines that temporarily stabilize inclusion without making it durable within a non-enabling structural environment. This conclusion is reinforced by empirical evidence from Ethiopian primary schools, which consistently documents weak structural support, limited institutional capacity, inadequate resources, absent or underdeveloped school structures for special needs provision, weak enforcement of legal and policy frameworks, inaccessible infrastructure, and gaps in school community-building despite teachers' favorable inclusive views (Abebe et al., 2023; Asrat, 2020; Muluken, 2017; Esayas et al., 2025; Jaffer, 2018; Getachew, 2025; Teketel, 2018; Tesaka et al., 2024; Tesaka et al., 2025). Taken together, these studies suggest that the issue lies less in attitudinal resistance among teachers than to the persistent absence of reliable institutional mechanisms capable of sustaining inclusion in routine practice.

This reconceptualization therefore relocates the locus of the inclusion problem—and, by extension, the focus of meaningful intervention—from individual educator attitudes and dispositions to the design, coherence, and operational capacity of the education system itself. It establishes that sustainable and equitable inclusion cannot be secured through teachers' goodwill alone, but requires institutionally anchored, routinized, and coordinated mechanisms capable of translating inclusive intent into consistent and durable practice. Absent such institutionalization, the very routines that allow inclusion to "hold under pressure" simultaneously function as ceilings on reform rather than foundations for transformation. This systemic reframing thus provides the conceptual foundation for the conclusions, implications, and recommendations advanced in Chapter Six.

CHAPTER SIX

SUMMARY, CONCLUSIONS, AND RECOMMENDATIONS

This chapter concludes the study by summarizing the major findings, drawing conclusions from the integrated results, and presenting implications, recommendations, and directions for future research. The chapter is guided by the central argument developed across the preceding chapters: that, in the selected public primary schools of Addis Ababa, the main impediment to inclusive education for SWDs is not primarily a lack of teacher goodwill, but the limited institutional capacity to translate inclusive intent into stable, coordinated, and sustainable practice. Accordingly, the chapter moves from summary to conclusion, and from conclusion to implications and recommendations.

6.1. Summary of the Study and Major Findings

This study examined the inclusion of SWDs in selected public primary schools of Addis Ababa from teachers' perspectives. The study focused specifically on the interrelated domains of inclusive culture, policy, and practice. Its purpose was not only to identify whether teachers supported inclusion, but also to understand how inclusion was perceived, enacted, constrained, and sustained in everyday school settings. The study sought to clarify both the enabling conditions and the structural barriers shaping inclusive education in this context.

To address these concerns, the study employed a sequential explanatory MMD. Quantitative and qualitative data were collected and integrated to produce a comprehensive understanding of the phenomenon. The quantitative phase provided a broad account of teachers' perspectives across the study domains, while the qualitative phase enabled deeper exploration of the meanings, tensions, and contextual dynamics underlying those patterns. By integrating the two phases, the study moved beyond descriptive reporting and generated a broader explanatory interpretation of inclusion in the selected public primary schools.

Overall, the study found that inclusive culture appeared relatively stronger at the level of normative commitment than at the level of institutional realization. Teachers tended to endorse general principles of inclusion, and qualitative evidence suggested ethical concern and professional willingness to support SWDs. However, these orientations did not automatically translate into durable inclusive provision. Normative support existed, but it operated within structurally weak conditions that limited its practical effect.

With respect to policy, the study found that commitment to inclusion was more visible at the formal or symbolic level than at the level of operational implementation. Inclusion was recognized in principle, but the structures, coordination mechanisms, and institutional routines required to sustain it were weak, fragmented, or inconsistently enacted. As a result, the schools did not appear to possess resilient systems capable of translating policy commitment into routine inclusive support.

At the level of practice, inclusion was enacted unevenly and often through teacher-dependent improvisation. Teachers frequently relied on ad hoc adaptations, moral effort, informal support strategies, and local coping practices to include SWDs in classroom and school life. These practices sometimes enabled participation, but they did not constitute robust institutionalized support. Their limitations became especially visible where students had high or complex support needs, since such needs placed demands on the school system that could not be absorbed through improvisation alone.

The study also identified variations in teachers' perceptions of inclusive culture, policy, and practices across selected demographic and professional characteristics. In particular, perceptions were associated with gender, teaching experience, experience teaching SWDs, and perceived severity of disability. Teachers with greater experience teaching SWDs tended to report more inclusive perceptions, while perceptions of inclusion tended to decline as the perceived severity of students' disabilities increased.

The quantitative analysis further indicated significant relationships among the three dimensions. ISC significantly predicted both ISP and ISPr, while ISP also significantly predicted ISPr. ISP further played a mediating role in the relationship between culture and practice, suggesting that

inclusive practices are shaped both directly by school culture and indirectly through policy structures.

When findings from the two phases were integrated, a notable tension became apparent. Normative orientation toward inclusion (values and ethical outlook) and professional goodwill (teachers' willingness and moral effort) coexisted with systemic incapacity. Inclusive effort emerged because teachers compensated for institutional weakness through personal effort and weakly embedded routines. Taken together, the findings suggest that, in the studied schools, inclusion appeared less as a stable institutional arrangement and more as a fragile and conditional practice operating under structural constraints.

Beyond this descriptive account, the findings also support a broader analytical interpretation of inclusive education in the selected public primary schools of Addis Ababa. The evidence does not simply indicate that there are barriers to inclusion. Rather, it suggests that inclusion in this context is shaped by a deeper structural contradiction in which teacher commitment exists but is not adequately carried by the wider educational system.

First, teachers do not appear to be the principal source of inclusion failure in the studied context. Across both phases, teachers expressed support for inclusion and demonstrated willingness to work with SWDs. This does not mean that all individual attitudes were uniformly positive or that attitudinal issues were absent. It does mean, however, that the dominant problem identified by the study lies less in teacher resistance than in the limited institutional capacity to support, coordinate, and stabilize inclusive intent. The evidence, therefore, challenges simplified accounts that locate the main obstacle to inclusion at the level of teacher disposition alone.

Second, inclusion itself seems to be insecure or conditional. Students with special needs are not being systematically excluded from schools. Rather, the degree to which inclusion occurs is partial and dependent on context. For example, inclusion is more easily achieved when students' needs are such that inclusion can be facilitated through minor accommodation, personal assistance, or adjustments. Inclusion is less secure where students' need expose inadequacies within the support structure of the school. In this regard, inclusion does not fail due to outright exclusion or opposition; inclusion is conditional based on the inability to accommodate all students equally.

Third, inclusion practices in the sample schools are only poorly institutionalized. Inclusion depends on individuals rather than on institutionalization. Support services, role assignment, implementation processes, and coordination do not seem robust enough to create regular, predictable inclusion. In this way, inclusion in the studied context may occur despite its fragility or instability, due in part to poor institutionalization. Under conditions of poor institutionalization, continuity depends on the availability, commitment, and willingness of individuals to take on extra burden.

Fourth, the evidence suggests a mismatch between student need and institutional capacity. The severity and complexity of support needs interact with systemic weakness in ways that make exclusionary outcomes more likely when needs exceed what discretionary effort can absorb. This means that the core problem is not simply pedagogical difficulty in isolation, but the inability of the wider system to provide a coordinated response to differentiated support needs. The more inclusion depends on improvisation, the more vulnerable it becomes to breakdown when pressures intensify.

Finally, fragile routines allow inclusion to persist without transforming the conditions that make it fragile. Informal parent engagement, ad hoc classroom adjustment, localized awareness efforts, and personal teacher sacrifice all function as stabilizing practices. They matter because they prevent total collapse and create some space for participation and belonging. Yet they remain weakly institutionalized and highly contingent. They allow the system to cope, but they do not transform coping into durable reform. In this sense, the very practices that enable inclusion to survive also conceal the depth of the institutional changes still required.

Collectively, these patterns designate that progressing inclusive education for SWDs in the studied context requires not only favorable attitudes but also the establishment of institutional provisions capable of stabilizing inclusive practice within schools.

6.2. Conclusions, Contributions, and Implications of the Study

6.2.1. **Conclusions**

The central conclusion of this study is that the fundamental impediment to inclusive education for SWDs in the studied public primary schools of Addis Ababa is not primarily a lack of teacher

goodwill or professional commitment. Rather, it is the absence of resilient institutional mechanisms capable of translating inclusive intent into routine, coordinated, and sustainable practice. Teachers often appear willing to include students with disabilities, but the system within which they work remains insufficiently equipped to support that commitment in stable and equitable ways.

In relation to inclusive culture, the study concludes that supportive values and ethical dispositions do exist among many teachers. However, these values are structurally under-supported. Culture alone cannot compensate for weak implementation conditions. Teacher commitment may sustain inclusion for a time, especially under pressure, but it cannot substitute for the institutional architecture needed to make inclusion durable. The presence of favorable values should therefore not be mistaken for evidence that the system itself is inclusive in any robust sense.

In relation to inclusive policy, the study concludes that formal commitment has outpaced operational enactment. Inclusion is recognized at the level of policy aspiration, but too often remains symbolic, fragmented, or weakly operationalized in practice. This gap between endorsement and implementation is not incidental. It is a defining feature of the way inclusion currently operates in the studied context. Policy direction, in other words, is present, but not yet sufficiently translated into the structures, routines, and accountabilities needed for reliable school-level delivery.

In relation to inclusive practice, the study concludes that support for SWDs is sustained largely through discretionary, improvised, and uneven forms of effort. Teachers adapt, compensate, and absorb pressures in ways that create real but fragile opportunities for inclusion. This makes inclusive practice highly dependent on individual agency and vulnerable to variation across classrooms and schools. It also means that inclusion remains especially unstable for students whose support needs are high or complex.

Generally, these conclusions specify that inclusion in the studied schools functions less as an institutionalized system than as a fragile project held together by committed actors working within non-enabling conditions. The schools do not appear to lack concern in simple moral sense. Rather, they lack the robust institutional supports required to convert concern into consistent educational

provision. The system survives partly because teachers compensate for its weaknesses, but compensatory effort should not be confused with secure inclusion.

At a conceptual level, the study concludes that inclusion in the studied context is best understood as a system–student mismatch. This formulation captures the way in which student support needs encounter a system that is formally committed to inclusion but operationally unable to sustain it consistently. The study also advances the concept of conditional inclusion to explain why participation may be present in principle yet fragile in practice. Relatedly, the notion of "holds under pressure" routines helps explain how schools avoid total breakdown without achieving meaningful institutional transformation. These concepts represent the study's central analytical contribution.

6.2.2. Contributions

This study makes original contributions to the field of inclusive education across four interrelated domains: theoretical, empirical, methodological, and practical. Each set of contributions is grounded in the integrated quantitative and qualitative evidence generated from the Addis Ababa government primary school context.

1) Theoretical Contributions

The inquiry advances inclusive education theory in three significant ways. First, it empirically validates the Culture–Policy–Practice (C-P-P) framework within a low-resource Global South environment, thereby extending the applicability of this framework beyond the high-income Global North settings where it has predominantly been tested. Second, the study introduces the novel theoretical construct of conditional inclusion – a concept capturing school environments in which inclusion is normatively affirmed but structurally fragile, resulting in a tiered ecology of participation where learners with mild or visible sensory impairments are accommodated while those with intensive support needs experience systematic marginalization. Third, the study develops a mechanistic causal model – the six-step self-reinforcing conditional inclusion cycle – which explains why school policy functions only as a partial mediator between culture and practice. This causal mechanism is directly supported by the finding that ISC retains a strong direct effect on practice ($\beta = .531$) even after accounting for the influence of policy, thereby refining

theoretical understandings of how inclusive reforms translate – or fail to translate – into classroom routines.

2) Empirical Contributions

The study establishes several empirical benchmarks for inclusive education research in Ethiopia and similar contexts. It provides the first large-scale SEM baseline data (N = 424) assessing how primary school teachers perceive the interrelationships among inclusive school culture, policy, and practice. Quantitatively, the investigation uncovers critical path benchmarks: a strong direct cultural pathway to practice ($\beta = .531$), a meaningful mediated policy pathway ($\beta = .253$), and an exceptionally high total explained variance of 72.3% ($R^2 = .723$) in inclusive practices – collectively establishing a definitive empirical reference point for future studies. Qualitatively, the study deploys intensive triangulated evidence from FGDs, KIIs, structured observations, and document reviews across 12 distinct schools. This multi-source data cross-verifies the quantitative path findings and reveals the system–student mismatch pattern – a persistent misalignment between institutional routines, resources, and expectations, on the one hand, and the diverse support needs of learners with disabilities, on the other.

3) Methodological Contributions

From a methodological standpoint, the study offers three advances. First, it provides an implementation-gap template – an advanced mixed-methods design that merges quantitative SEM with deep qualitative triangulation, specifically optimized for studying inclusive education implementation gaps in resource-constrained settings. Second, the research normalizes best-practice mediation inference in educational SEM by applying bias-corrected and accelerated (BCa) bootstrapping with 2,000 resamples, thereby offering a replicable analytical template for future investigations of indirect effects in complex educational reforms. Third, the study builds and statistically validates a localized school-level measurement instrument (capturing inclusive school culture, policy, and practice) mapped cleanly to Ethiopian primary education conditions – a tool that other researchers can adapt for similar contexts.

4) Practical and Policy Contributions

The findings carry direct implications for educational practice and national policy. Practically, the study demonstrates that high-level declarative mandates are insufficient: without localized, usable structural procedures, clearly defined staffing roles, and internal accountability loops, inclusive education policies fail to translate into classroom change. Critically, the strong direct cultural pathway ($\beta = .531$) demonstrates an evidence-based leadership inversion – nurturing relational school norms (shared values, collegial trust, peer support) influences classroom execution even more heavily than passing formal policy directives – challenging traditional top-down leadership models. For policymakers, the study offers a strategic diagnostic tool – the conditional inclusion cycle – which allows national and sub-national education authorities to target precise systemic vulnerabilities at explicit leverage points (e.g., weak operational guidance, deficit norms, or low investment in support infrastructure). Collectively, these contributions reposition inclusive education as a systemically grounded, practice-oriented reform agenda rather than a top-down symbolic commitment, providing an empirical roadmap for sustainable, evidence-informed transformation in low- and middle-income education systems.

6.2.3. Implications

The findings and contributions of this study carry specific implications for theory, policy, school leadership, teacher development, methodology, and the wider Ethiopian primary education context. These implications arise from the core contributions: the conditional inclusion construct, the 6-step self-reinforcing cycle, the evidence-based leadership inversion, and the strategic diagnostic tool.

At the theoretical level, the introduction of the conditional inclusion construct implies that researchers should move beyond explanations that over-locate the problem of inclusion in teacher attitudes alone. The finding that inclusion can be normatively affirmed yet structurally fragile means that theoretical models must account for the tiered ecology of participation – where learners with mild impairments are accommodated while those with intensive needs are marginalized. Furthermore, the 6-step self-reinforcing conditional inclusion cycle implies that inclusion failure is not a static condition but a dynamic, self-perpetuating process. Future theoretical frameworks

should, therefore, model feedback loops between weak policy, improvisation, breakdowns, deficit norms, and low investment, rather than treating barriers as independent.

At the policy level, the study's identification of the operational guidance gap implies that formal recognition of inclusive education should not be treated as sufficient evidence of effective implementation. The conditional inclusion cycle serves as a strategic diagnostic tool: policymakers can use its six leverage points (e.g., Step 1: weak policy; Step 4: deficit norms; Step 5: low investment) to identify where interventions are needed. Policy success depends not only on declarations but on enforceable structures, coordinated support systems, and implementation accountability – otherwise, policy itself may become part of the cycle that reproduces conditional inclusion.

For school leadership, the evidence-based leadership inversion demonstrated by the strong direct cultural pathway ($\beta = .531$) carries a direct implication: nurturing relational school norms (shared values, collegial trust, peer support) influences classroom execution just as heavily as passing formal policy directives. This implies that school leaders may benefit from inverting traditional top-down management models – investing equally, if not more, in building collaborative cultures rather than merely circulating policy documents. Leadership should involve role clarity, coordination, follow-up, and the deliberate reduction of over-dependence on individual teacher sacrifice.

For teacher preparation and professional development, the implication of the system–student mismatch pattern is that training remains necessary but insufficient. Teachers need knowledge, strategies, and confidence, but these alone cannot secure inclusion if the wider school environment remains structurally weak. Professional development should therefore be linked to school-level support systems, collaborative mechanisms, practical resources, and follow-up processes – otherwise, training risks reinforcing the expectation that teachers should solve systemic problems through individual effort alone.

Methodologically, the study's validation of a localized measurement instrument along with its mixed-methods design imply that future researchers in similar resource-constrained contexts can adopt or adapt these tools. The application of BCa bootstrapping for mediation testing offers a

replicable analytical template. Evaluators and development agencies may consider replacing single-method assessments with this integrated approach to more accurately diagnose implementation gaps.

More broadly, the study implies that sustainable inclusion in Ethiopian primary education requires a shift from moral aspiration to operational design – but now with specific tools. The conditional inclusion cycle provides a roadmap for breaking the self-reinforcing loop. The central issue is not whether inclusion should be valued, but how it can be organized, resourced, and monitored so that it becomes durable in practice. The contributions of this study offer empirical and theoretical leverage points to achieve that transformation.

6.3. Recommendations

The recommendations arising from this study are directed to different levels of the education system, proceeding from national policy structures to school-level practice, because the problem identified is systemic – specifically, the conditional inclusion cycle and system–student mismatch – and cannot be addressed by teachers alone. The recommendations are intended to strengthen the institutional conditions necessary for inclusion to move from a fragile teacher-dependent effort toward a durable school-level practice.

1) Ministry of Education (MoE)

The findings of this study suggest the potential value of exploring the contextual adaptation of school-level inclusion frameworks, such as Booth and Ainscow's *Index for Inclusion*, to the Ethiopian education context. Although the framework was developed in other educational settings, its emphasis on the interaction between inclusive culture, policy, and practice aligns with the structural relationships identified in this study. Structural analysis indicated that inclusive school culture significantly influences both inclusive policy and inclusive practice, while policy also plays a mediating role in shaping practice. This pattern, together with the introduced concept of conditional inclusion, implies that inclusion is sustained not through isolated actions but through the coordinated interaction of cultural values, institutional policy arrangements, and practice – an interaction that the study found to be weakly institutionalized, resulting in fragile and conditional inclusion. A contextualized exploration of the *Index for Inclusion* could therefore offer a useful

starting framework for guiding school-level reflection and strengthening the alignment of culture, policy, and practice.

However, any formal adaptation of such a framework for the Ethiopian education system would require broader consultation and evidence across multiple stakeholders – including teachers, students, school leaders, parents, support personnel, professionals, and policymakers – and across different levels of schooling. The present study, therefore, does not claim to provide sufficient evidence for full system-level adaptation. Rather, it indicates that the conceptual logic of aligning inclusive culture, policy, and practice may provide a useful starting point for future nationally grounded framework development.

To address the operational guidance gap identified in this study (quantitative mean = 2.50, d = –0.74), the MoE should:

- Develop and mandate a School-Level Inclusive Education Implementation Toolkit that translates the national SNIE strategy into daily operational guidance. The toolkit shall contain step-by-step procedures for identification, reasonable accommodation, assessment adaptation, and simplified, classroom-focused IEP templates.
- Introduce a dedicated budget line for inclusive education at school and woreda levels, covering accessible learning materials, assistive devices, maintenance, and IERC operational costs. A minimum ring-fenced percentage of school operational grants should be allocated for inclusive resources (addressing the severe deficit in resource provision, mean = 2.38, d = –0.82).
- Reform national assessment policies to explicitly authorize reasonable accommodations (extra time, oral exams, scribes, adapted formats) without penalty to school rankings, and pilot alternative assessment pathways (portfolio, practical, continuous assessment) for SWDs who cannot access written examinations.

2) Addis Ababa City Administration Education Bureau (AACAEB)

The AACAEB and corresponding sub-city and woreda education offices should establish more structured support and follow-up systems for schools. Monitoring should assess whether schools have functioning inclusion-related routines, coordination mechanisms, and support structures

using the six leverage points of the conditional inclusion cycle (e.g., weak operational guidance, deficit norms, low investment) as a diagnostic guide, rather than simply whether inclusion is formally acknowledged.

Specifically, the **Bureau** should:

- Institutionalize routine, classroom-focused coaching for inclusive pedagogy, requiring that each IERC coordinator or SNE focal person provide at least four classroom visits per month per school. Coaching shall focus on co-planning adapted lessons, modelling differentiated instruction, and supporting IEP implementation – treated as a primary duty, not an add-on.
- Establish functional referral and support pathways for students with intensive support needs (autism, intellectual disability, multiple impairments), in partnership with Woreda Health and social affairs offices. The pathway shall include a simple screening and referral form, designated contact persons, quarterly case review meetings, and a small flexible fund for emergency support.

3) Teacher Education Institutions (Colleges/Universities)

There is a need for teacher education institutions to tailor their programs toward more practicality regarding what it takes to provide inclusive education within the classroom setting. Specifically, pre-service and in-service training should address the system–student mismatch by preparing teachers to work within resource-constrained environments, use differentiated instruction, adapt assessments, and collaborate with support personnel. Inclusive education should not only be an abstract concept but should be taught as such.

Further improvements based on study findings (teachers reported inadequate training, reverse-scored mean = 2.67) include:

- Revise pre-service curricula to include a mandatory course on disability-specific instructional strategies (autism: visual schedules, structured teaching; intellectual disability: task analysis, concrete manipulatives; sensory impairments: adapted materials, communication basics) and

a practicum requiring student-teachers to deliver at least three adapted lessons in inclusive classrooms.

- Replace one-off "inclusion awareness" workshops with a sustained, practice-based in-service professional development cycle lasting 6–8 months, incorporating classroom coaching visits and teacher action research on one new inclusive strategy.

4) Primary Schools

a) School leadership

School leadership should prioritize the institutionalization of inclusive routines. Consistent with the evidence-based leadership inversion ($\beta = .531$), inclusion should not depend primarily on whether particular teachers are especially committed, experienced, or self-sacrificing. Schools should assign clearer responsibility for disability-related support, strengthen internal collaboration among teachers and leaders, and create more regular mechanisms for engaging families in structured ways.

Concrete actions derived from the study's qualitative findings (weak institutionalization, nominal teams) include:

- Lead a participatory process to develop a one-page School Inclusion Code of Practice specifying non-negotiable routines: every SWD assigned a classroom role or peer buddy, documented restorative response to discrimination within 24 hours, routine family check-ins, and a simple accessibility prompt in all lesson plans.
- Restructure timetables to create protected weekly collaborative planning sessions (e.g., 45 minutes per grade level) focused on reviewing SWDs' participation and co-planning one adapted lesson or assessment.
- Operationalize IEPs as living classroom tools by replacing paper-heavy processes with a simplified One-Page Classroom Support Plan that includes 2–3 prioritized goals, concrete in-class strategies, role assignments, and a monthly 15-minute review meeting.
- Facilitate a voluntary, action-oriented School Inclusion Team (SIT) that meets fortnightly, includes teachers, non-teaching staff, learners, and parents, and focuses on solving 3–5 concrete barriers per term.

b) School-based Continuing Professional Development (CPD)

School-based CPD should be more closely aligned with the practical demands of inclusive classroom work. In particular, CPD should move beyond general orientation and include sustained support for differentiated instruction, classroom adaptation, collaborative problem-solving, and strategies for working in resource-constrained environments. It should also be linked to follow-up, coaching, and other forms of school-level professional support so that professional learning strengthens practice rather than remaining a one-off compliance activity. The coaching model described under the Bureau's recommendations (routine classroom visits) is the primary vehicle for this.

c) Teachers

Teachers and schools should assess any informal processes that are already working and explore how they might be incorporated into established routines – what this study has termed "holds under pressure" routines. Informal practices of engaging parents, accommodating students, and community support initiatives must not depend simply on individual remembrance or initiative. When possible, they need to be captured, shared, and incorporated into school operations.

Based on the quantitative deficits in teaching-learning practices (mean = 2.58, d = –0.66) and assessment (mean = 2.59), teachers are encouraged to adopt the following low-cost, high-frequency micro-routines in every lesson:

- Seating check – SWDs seated for visibility, peer access, and movement.
- One adapted question – at least one question or task modified (oral, pointing, matching, simplified).
- Partner check – every student, including SWDs, turns to a neighbor for one minute to share an idea
- Access prompt – the teacher asks, "How can everyone show me their understanding?" and provides at least two response options (write, draw, tell, point, act, etc).
- Closing check – the teacher notes one thing that worked for SWDs that day and one thing to adjust tomorrow.

Additionally, teachers should use structured, low-stakes peer-assisted learning (rotating pairs, clear short roles) and provide at least three alternative response modes (written, oral, practical) for every assessment to make the assessment accessible.

5) Parents and School–Family Partnerships

The study's findings on weak family engagement (mean = 2.61) and problem-driven contact justify specific recommendations for this stakeholder group:

- Normalize routine, non-problem-driven family engagement through a scheduled check-in call or meeting with parents of each SWD at the start of each term, a monthly stigma-sensitive "open coffee morning," and a simple home–school communication log.
- Facilitate a parent-to-parent support network for families of SWDs, led by parent volunteers with school-provided space and facilitation training, to reduce isolation and share strategies.

Summary of Implementation Priorities: All of these recommendations share a common objective – namely, that it is not trying merely to create more goodwill; rather, the goal is to build resilient institutional arrangements that can carry existing goodwill toward consistent and equitable inclusion, breaking the self-reinforcing conditional inclusion cycle. The recommendations are prioritized for action: short-term, low-cost steps (micro-routines, Code of Practice, collaborative planning time, resource borrowing systems, School Inclusion Team formation) should begin immediately, while medium- and long-term structural reforms (toolkit development, dedicated budget lines, assessment reform, pre-service curriculum revision) require coordinated implementation over 12 to 36 months.

6.4. Limitations and Further Research

A. **Limitations of the Study**

Although this study provides important insights into inclusive education in selected public primary schools of Addis Ababa, its conclusions should be interpreted within certain boundaries. First, the study was conducted in selected public primary schools in Addis Ababa; accordingly, the findings are context-bound and should not be assumed to represent all Ethiopian school settings,

particularly those in rural areas, private schools, or regions with different institutional and resource conditions. Second, the study centered on teachers' perspectives, which was appropriate to its purpose but necessarily limited the extent to which the experiences and interpretations of students with disabilities, parents, school leaders, and support personnel were incorporated directly. As a result, the study offers a grounded account of inclusion as understood and negotiated by teachers, but not a fully multi-actor account of the phenomenon.

Third, the study relied substantially on participants' accounts of school realities. While such accounts are essential for understanding how inclusion is perceived, interpreted, and enacted, extended observational inquiry into everyday classroom practice was limited by resource constraints. The study did include structured non-participant observations of school environments and resource centers, but sustained lesson-level observation of teacher–student interactions over time was not feasible. This limitation was shaped in part by resource constraints, which restricted the inclusion of additional data sources such as classroom observation. Finally, although the MMD strengthened the explanatory power of the study by combining breadth and depth, it captured the phenomenon within a defined period and therefore could not trace how fragile inclusion routines may develop, weaken, or become institutionalized over time. These limitations do not diminish the value of the study, but they do clarify the scope within which its findings and conclusions should be understood.

B. Suggestions for Further Research

Although this study provides important insights into inclusive education in selected public primary schools of Addis Ababa, it also leaves several questions open. These suggest a number of directions for further research. First, future studies should move beyond teacher perspectives alone and include school leaders, students with and without disabilities, parents, support personnel, and policymakers. Such work would provide a broader understanding of how inclusion is experienced, governed, and interpreted across different levels of the system. Second, the conditional inclusion cycle and the system–student mismatch construct require empirical testing in other regions and school types. Comparative studies would be valuable. Future research could compare Addis Ababa with other regions of Ethiopia, public and private schools, or schools with relatively stronger and

weaker inclusion outcomes. Such comparisons would help clarify which features of the present findings are context-specific and which reflect wider systemic dynamics.

Third, longitudinal research is needed to examine whether inclusive reforms become more securely institutionalized over time. In particular, future studies could investigate how the "holds under pressure" routines identified in this dissertation either develop into durable institutional supports or remain temporary coping strategies. Fourth, further research should examine how inclusion differs by type, severity, and complexity of disability. Students with high or complex support needs appear especially important in this regard, since they most clearly expose the limits of current arrangements. The conditional inclusion construct predicts a tiered ecology of participation; future research should test this prediction systematically across disability categories. More focused research on these student groups would help refine both policy and practice. Finally, implementation-focused research is needed to examine more directly how the six steps of the conditional inclusion cycle operate in real time – how inclusive policy is translated, adapted, weakened, delayed, or stalled at school level. Such studies would help illuminate the mechanisms through which formal commitment either becomes operational reality or remains largely symbolic.

6.5. Concluding Reflection

This study has argued that inclusive education in the selected public primary schools of Addis Ababa remains possible, but not yet fully institutionalized. Its key contribution is demonstrating that the principal challenge is systemic rather than merely attitudinal. Many teachers already demonstrate commitment to inclusion; however, such commitment alone cannot sustain equitable practice in the absence of coherent structures, operational support, and resilient institutional routines. The future of inclusive education in this context therefore depends less on increasing teacher commitment and more on strengthening the system's capacity to support the commitments already present. The task ahead is not simply to affirm inclusion as an educational ideal, but to construct institutional conditions through which it can be sustained as an everyday reality for students with disabilities (SWDs) in Addis Ababa public primary schools. Achieving this will require stronger school-level frameworks that align inclusive culture, policy, and practice in ways that move inclusion from fragile intent toward durable institutional practice.

REFERENCES

Ab Aziz, N. A. (2015). Focus group discussions: An insightful tool for data collection. *American Journal of Applied Sciences*, *12*(7), 468–472.

Abebe, S. M., Batorowicz, B., Xu, X., Okoroafor, N. A. E., Mekonnen, F., Melak, M. F., ... & Aldersey, H. M. (2023). Understanding Barriers and Facilitators to Inclusive Education for Grade 7-9 Students with Disabilities in Ethiopia and Ghana: A Qualitative Study. *Disability, CBR & Inclusive Development*, *34*(1), 6-26. https://doi.org/10.20372/dcidj.671

Abrams, T. (2015). Heidegger, subjectivity, disability. *Subjectivity*, *8*(3), 224-242. https://doi.org/10.1057/sub.2015.3

Achamrah, M. (2022). Examining Inclusive pedagogy and practice: Moroccan primary teachers' attitudes and practices in Moroccan Primary Schools. World Journal of Advanced Research and Reviews, 14(02), 174–184. https://doi.org/10.30574/wjarr.2022.14.2.0413

Aderie Feye (2017). The study of accessibility of the physical environment of primary schools to implement inclusive education: The case of Addis Ababa, Ethiopia. *Imperial Journal of Interdisciplinary Research*, *2*(1), 26-36.

Adu-Boateng, S., & Goodnough, K. (2022). Examining a science teacher's instructional practices in the adoption of inclusive pedagogy: A qualitative case study. *Journal of Science Teacher Education*, *33*(3), 303-325. https://doi.org/10.1080/1046560X.2021.1915605

Aemiro Tadesse. (2020). Education of children and youth with disabilities in the Ethiopian school system. *International Journal of Scientific and Research Publications*, *10*(4), 732-742. http://dx.doi.org/10.29322/IJSRP.10.04.2020.p10079

Aemiro Tadesse. (2025). Preparing Special Needs Educators for Mainstream School Practice in Ethiopia: A Study of the Special Needs and Inclusive Education Professional Preparation Program. *Sage Open*, *15*(4), 21-16. https://doi.org/10.1177/21582440251407620

Ainscow, M. (1999). *Understanding the development of inclusive schools*. Falmer Press.

Ainscow, M. (2020). Promoting inclusion and equity in education: Lessons from international experiences. *Nordic journal of studies in educational policy*, *6*(1), 7-16. https://doi.org/10.1080/20020317.2020.1729587

Ainscow, M., & Miles, S. (2008). Making education for all inclusive: Where next? *Prospects*, *38*(1), 15–34. https://doi.org/10.1007/s11125-008-9055-0

Ainscow, M., & Sandill, A. (2010). Developing inclusive education systems: The role of organisational cultures and leadership. *International journal of inclusive education*, *14*(4), 401-416. https://doi.org/10.1080/13603110802504903

Ainscow, M., Booth, T., & Dyson, A. (2006). Improving schools, developing inclusion. *Routledge*.

Ainscow, M., Dyson, A., & Weiner, S. (2013). From exclusion to inclusion: Ways of responding in schools to students with special educational needs. *UNESCO*.

Ajani, O. A., & Ntombela, S. (2025). Advancing Inclusive Education in Higher Education: Challenges and Opportunities in Preparing Pre-ServiceTeachers to Support Students with Disabilities. *International journal of management, knowledge and learning*, *14*(1). https://doi.org/10.53615/2232-5697.14.25-41

Aldabas, R. (2020). Special education teachers' perceptions of their preparedness to teach students with severe disabilities in inclusive classrooms: A Saudi Arabian perspective. *Sage Open*, *10*(3), 1-14. https://doi.org/10.1177/2158244020950657

Alemayehu Tekelemariam. (2018). The move towards inclusive education in Ethiopia. In *The Wiley Handbook of Educational Foundations* (pp. 123–140). https://doi.org/10.1002/9781118931837.ch8

Alexaki, N., Foulidi, X., & Papakitsos, E. C. (2022). The Three Dimensions of Inclusive Education in the Attempt for Educational Change: Cultures, Policies and Practices. *Journal of Research Initiatives*, *6*(1), 5. https://digitalcommons.uncfsu.edu/jri/vol6/iss1/5

Alharahsheh, H. H., & Pius, A. (2020). A review of key paradigms: Positivism VS interpretivism. *Global academic journal of humanities and social sciences*, *2*(3), 39-43. https://doi.org/10.36348/gajhss.2020.v02i03.001

Alison S. Gable (2014) Disability theorizing and real-world educational practice: a framework for understanding. *Disability & Society*, 29(1), 86-100, https://doi.org/10.1080/09687599.2013.776485

Alkhateeb, J. M., Hadidi, M. S., & Alkhateeb, A. J. (2016). Inclusion of children with developmental disabilities in Arab countries: A review of the research literature from 1990 to 2014. *Research in developmental disabilities*, *49*, 60-75. http://dx.doi.org/10.1016/j.ridd.2015.11.005

Amaratunga, D., Haigh, R., Hemachandra, K., & Kamalrathne, T. (2023). Disaster Risk Reduction new dimensions: COVID-19 Preparedness at local level. https://mcr2030.undrr.org/media/86028/download

Amka, A., Mirnawati, M., & Damastuti, E. (2023). Analysis of the Influence of Culture. *Policy, and Practice Index on the Quality of Inclusive School Education in South Kalimantan. Journal of ICSAR*, *7*(1), 44-50. https://doi.org/10.17977/um005v7i12023p44

Ampiah, P. K., Hendrick, P., Moffatt, F., & Ahenkorah, J. (2020). Operationalization of a biopsychosocial approach for the non-pharmacological management of patients with chronic musculoskeletal pain in low-and middle-income countries: A systematic review. *Musculoskeletal Care*, *18*(3), 227-244. https://doi.org/10.1002/msc.1462

Anderson, J., & Boyle, C. (2015). Inclusive education in Australia: Rhetoric, reality and the road ahead. *Support for Learning, 30*(1), 4–22. https://doi.org/10.1111/1467-9604.12074

Andersson, R. (2022). Approaching change through pragmatic routines: A case study of a municipal response to a teacher certification reform in the Swedish School-age Educare. *Nordic Journal of Studies in Educational Policy*, *8*(2), 133-145. https://doi.org/10.1080/20020317.2022.2050593

Angelides, P., & Antoniou, E. (2012). Understanding the role of culture in developing inclusive schools: A case study from Cyprus. *Journal of School Leadership*, *22*(1), 186-209. https://doi.org/10.1177/105268461202200108

Angelidis, P. (2019). Teachers' attitudes toward inclusive education: A critical reflection on policy and practice. *European Journal of Special Needs Education*, *34*(4), 455–468. https://doi.org/10.1080/08856257.2019.1581407

Angelidis, P., Georgiou, A., & Stylianou, T. (2009). The implementation of inclusive education in Cyprus: The role of leadership and school culture. *International Journal of Inclusive Education, 13*(2), 103–120. https://doi.org/10.1080/13603110701711179

Antia, S. D., Stinson, M. S., & Gaustad, M. G. (2002). Developing membership in the education of deaf and hard-of-hearing students in inclusive settings. *Journal of deaf studies and deaf education*, *7*(3), 214-229. https://doi.org/10.1093/DEAFED/7.3.214

Arbuckle, J. L. (2012). *IBM SPSS Amos 21 user's guide*. Amos Development Corporation.

Arduin, S. (2015). A review of the values that underpin the structure of an education system and its approach to disability and inclusion. *Oxford Review of Education*, *41*(1), 105-121. https://doi.org/10.1080/03054985.2015.1006614

Armstrong, D., Armstrong, A. C., & Spandagou, I. (2011). Inclusion: By choice or by chance?. *International journal of inclusive education*, *15*(1), 29-39. https://doi.org/10.1080/13603116.2010.496192

Arndt, K., & Van Beuren, M. (2013). The speed of dark and this alien shore: Representations of cognitive difference. Journal of Literary & Cultural Disability Studies, 7(1), 89-104,119. https://doi.org/10.3828/jlcds.2013.6

Ashokan, V. (2023). Empowering Diversity: Innovative Practices and Strategies in Inclusive Education. *International Journal of Arts, Science and Humanities OPEN*, *11*(1), 129–134. https://doi. org/10.34293/sijash. v11iS1i2-Nov.7332

Asrat Adugna. (2020). Exclusion in The Name of Inclusion: The Trial and Error of Inclusive Education in Ethiopia. *Berhan International Research Journal of Science and Humanities Учредители: Debre Berhan University*, *3*, 15-35. https://doi.org/ 10.61593/dbu.birjsh.01.01.24

Australian Human Rights Commission. (2014). *Equal before the law: Towards disability justice strategies*. https://humanrights.gov.au

Avramidis, E., & Kalyva, E. (2007). The influence of teaching experience and professional development on Greek teachers' attitudes towards inclusion. *European journal of special needs education*, *22*(4), 367-389. https://doi.org/10.1080/08856250701649989

Bailey, K., Harris, S. J., & Simpson, S. (2015). Stammering and the Social Model of Disability: Challenge and Opportunity. *Procedia - Social and Behavioral Sciences*, *193*(10th Oxford

Bale, R. (2022). Developing adaptive expertise: What can we learn from improvisation and the performing arts?. In *Developing expertise for teaching in higher education* (pp. 203-217). Routledge. https://doi.org/10.4324/9781003198772-19

Barnes, C., & Mercer, G. (2010). *Exploring disability* (2nd ed.). Polity Press.

Bartlett, N. (2018). Principals as Champions of Collaboration for Vulnerable Children and Youth: A Case Study of Community Schools. *Canadian Journal of Educational Administration and Policy*, *187*, 61-77.

Bateman, K. M., & McDonald, S. (2023). Policy translation in assemblage: networked actors mediating science teachers' policy play. *Disciplinary and Interdisciplinary Science Education Research*, *5*(1), 14. https://doi.org/10.1186/s43031-023-00081-6

Bath, B., Trask, C., McCrosky, J., & Lawson, J. (2014). A Biopsychosocial Profile of Adult Canadians with and without Chronic Back Disorders: A Population-Based Analysis of the 2009-2010 Canadian Community Health Surveys. *BioMed Research International*, *2014*(1), 919621. https://doi.org/10.1155/2014/919621.

Belay Tefera, Fentahun Afmas, and Missaye Mulatie (2015). Education of children with special needs in Ethiopia: Analysis of the Rhetoric of 'Education for All' and the Reality on the Ground. https://www. researchgate.net/publication/320584887.

Beltran, K. A., Agripa, S. A., Bustarga, A. J. O., Cruz, K. B. D., Marmol, S. L., & Morallo, S. J. A. (2025). Practices and challenges in implementing inclusive education in Philippine elementary schools. *Journal of Education Research*, *6*(1), 8-22. https://doi.org/10.37985/jer.v6i1.2251

Bennett, S., Corluka, A., Doherty, J., & Tangcharoensathien, V. (2012). Approaches to developing the capacity of health policy analysis institutes: a comparative case study. *Health Research Policy and Systems*, *10*(1), 7. http://www.health-policy-systems.com/content/10/1/7

Benson, S., Al-Natour, M., & Hussein Diaa, M. (2024). Parent input: Shaping inclusive education for students with disabilities. *International Journal of Developmental Disabilities*, *70*(6), 1102-1111. https://doi.org/10.1080/20473869.2024.2381909

Bernstein, R. S., & Salipante, P. (2025). *Sustainable Inclusion Through Performance-driven Practices: An Evidence-based, Dynamic Systems Framework*. Cambridge University Press. https://doi.org/10.1017/9781009551540

Best, J., Kahn, J. & Jha, A. (2017). *Research in Education* (10th Ed.). India: Pearson

Bewunetu Zewude, Getnet Tadele, Kibur Engdawork, and Samuel Assefa (2024). Exploring targeted policies and institutional frameworks to address the problem of child streetism in Ethiopia. *Ethiopian Journal of Pediatrics and Child Health*, *19*(2), 193-218. https://dx.doi.org/10.4314/ejpch.v19i2.10

Bickenbach, J. E., & Bickenbach, J. E. (2009). Disability, culture and the UN convention. *Disability and Rehabilitation*, *31*(14), 1111-1124. https://doi.org/10.1080/09638280902773729.

Biesta, G., Priestley, M., & Robinson, S. (2015). The role of beliefs in teacher agency. *Teachers and teaching*, *21*(6), 624-640. https://doi.org/10.1080/13540602.2015.1044325

Bindhani, S., & Gopinath, G. (2024. Inclusive Education Practices: A Review of Challenges and Successes. *International Journal for Multidisciplinary Research*, *6*(2).

Bittencourt, T. (2020). Inclusive Policies and the Perils of Dissonance: A Case Study of an International Baccalaureate Public School in Ecuador. In *FIRE: Forum for International Research in Education* (Vol. 6, No. 1, pp. 24-39). Lehigh University Library and Technology Services. 8A East Packer Avenue, Fairchild Martindale Library Room 514, Bethlehem, PA 18015.

Blaz, D. (2016). *Differentiated instruction: A guide for world language teachers* (2nd ed.). Routledge. https://doi.org/10.4324/9781315695648

Blessinger, P., & Stefani, L. (2017). Inclusive leadership in higher education: Inclusion as a core institutional value. In *Inclusive leadership in higher education* (pp. 7-19). Routledge.

Blunch, N. (2012). *Introduction to structural equation modelling using IBM SPSS statistics and AMOS*. Sage.

Bogdan, R.C. and Biklen, S.K. (2007). Qualitative Research for Education: An Introduction to Theory and Methods. 5th Edition, Allyn & Bacon, Boston.

Bollen, K. A., & Stine, R. A. (1992). Bootstrapping goodness-of-fit measures in structural equation models. *Sociological Methods & Research, 21*(2), 205–229.

Bölte, S., Leifler, E., Berggren, S., & Borg, A. (2021). Inclusive practice for students with neurodevelopmental disorders in Sweden. *Scandinavian journal of child and adolescent psychiatry and psychology*, *9* (9). https://doi.org/10.21307/sjcapp-2021-002

Boone Jr, H. N., & Boone, D. A. (2012). Analyzing Likert data. *The Journal of Extension*, *50*(2), 48.

Booth, T., & Ainscow, M. (2002). *Index for inclusion: developing learning and participation in schools*. Centre for Studies on Inclusive Education (CSIE.

Booth, T., & Ainscow, M. (2011). *Index for inclusion: Developing learning and participation in schools* (3rd ed.). Centre for Studies on Inclusive Education (CSIE).

Botts, B. H., & Owusu, N. A. (2013). The state of inclusive education in Ghana, West Africa. *Preventing School Failure: Alternative Education for Children and Youth*, *57*(3), 135-143. https://doi.org/10.1080/1045988X.2013.798776

Boyland, J. R. (2019). A social constructivist approach to the gathering of empirical data. *Australian counselling research journal*, *13*(2), 30-34.

Braddock, D. L., & Parish, S. L. (2002). An institutional history of disability. In D. Braddock (Ed.), *Disability at the dawn of the 21st century and the state of the states* (pp. 11–68). American Association on Mental Retardation.

Brennan, A., King, F., & Travers, J. (2021). Supporting the enactment of inclusive pedagogy in a primary school. *International journal of inclusive education*, *25*(13), 1540-1557. https://doi.org/10.1080/13603116.2019.1625452

Brent C. Elder, Michelle L. Damiani & Benson O. Oswago (2016). From attitudes to practice: utilizing inclusive teaching strategies in Kenyan primary schools, International Journal of Inclusive Education, 20:4, 413-434, https://doi.org/10.1080/13603116.2015.1082648

Bronfenbrenner, U. (1979). *The ecology of human development: Experiments by nature and design*. Harvard University Press. https://doi.org/10.2307/j.ctv26071r6

Bronfenbrenner, U. (1994). Ecological models of human development. In T. Husén & T. N. Postlethwaite (Eds.), *International encyclopedia of education* (2nd ed., Vol. 3, pp. 37–43). Elsevier.

Bronfenbrenner, U., & Morris, P. A. (2006). The Bioecological Model of Human Development. In R. M. Lerner & W. Damon (Eds.), *Handbook of child psychology: Theoretical models of human development* (6th ed., pp. 793–828). John Wiley & Sons, Inc.

Brown, T. A. (2015). *Confirmatory factor analysis for applied research* (2nd ed.). Guilford Press.

Browne, M. W., & Cudeck, R. (1993). Alternative ways of assessing model fit. In K. A. Bollen & J. S. Long (Eds.), *Testing structural equation models* (pp. 136–162). Sage.

Bryman, A. (2016). *Social research methods* (5th ed.). Oxford University Press.

Budiarti, N. D., & Sugito, S. (2018). Creating an Inclusive Culture of Elementary Schools. *Jurnal Ilmiah Peuradeun*, *6*(2), 307. https://doi.org/10.26811/peuradeun.v6i2.237

Budiarti, N. D., & Sugito, S. (2018). Implementation of inclusive education of elementary schools: A case study in Karangmojo Sub-District, Gunungkidul Regency. *Journal of Education and Learning (EduLearn)*, *12*(2), 214-223. https://doi.org/10.11591/edulearn.v12i2.8727

Burningham, O., Chen, A., Genovesi, E., Belay, W., Ahmed, I., Ayele, M., ... & Hoekstra, R. A. (2024). Inclusive education for children with developmental disabilities in Ethiopia: stakeholder views on benefits, disadvantages and priorities for action. *Journal of Autism*

and Developmental Disorders, *56*(1), 410-425. https://doi.org/10.1007/s10803-024-06549-2

Byrne, B. M. (2016). *Structural equation modeling with AMOS: Basic concepts, applications, and programming* (3rd ed.). Routledge.

Canales, R., Bradbury, M., Sheldon, A., & Cannon, C. (2024). Evidence in practice: How structural and programmatic scaffolds enable collaboration in international development. *Administrative Science Quarterly*, *69*(3), 655-710. https://doi.org/10.1177/00018392241241483

Candrawati, A, C. & Purbani, W. (2025). Teaching English in rural settings: A systematic review of challenges and strategies in non-technological classrooms. English Language Teaching Educational Journal, 8(2), 54-65. https://doi.org/10.12928/eltej.v8i2.14081

Carifio, J., & Perla, R. (2008). Resolving the 50-year debate around using and misusing Likert scales. *Medical education*, *42*(12), 1150-1152.

Carifio, J., & Perla, R. J. (2008). Resolving the 50-year debate around using and misusing Likert scales. Medical Education, 42, 1150-1152. https://doi.org/10.1111/j.1365-2923.2008.03172.x

Carrie E. Rood (2021) "Working the Cracks": Leveraging Educators' Insider Knowledge to Advocate for Inclusive Practices. *Equity & Excellence in Education*, 54:4, 426-439, https://doi.org/10.1080/10665684.2021.2021656

Carrington, S., & Elkins, J. (2002). Bridging the gap between inclusive policy and inclusive culture in secondary schools. *Support for learning*, *17*(2), 51-57.

Carter, E. W., Asmus, J., Moss, C. K., Biggs, E. E., Bolt, D. M., Born, T. L., ... & Weir, K. (2016). Randomized evaluation of peer support arrangements to support the inclusion of high school students with severe disabilities. *Exceptional Children*, *82*(2), 209-233. https://doi.org/10.1177/0014402915598780

Carter, E., Cortez Ochoa, A. A., Leonard, P., Nzaramba, S., & Rose, P. (2022). School leaders' and teachers' preparedness to support education in Rwanda during the COVID-19 emergency.

Carvalho, M., Cruz, J., Azevedo, H., & Fonseca, H. (2022, May). Measuring inclusive education in Portuguese schools: Adaptation and validation of a questionnaire. In *Frontiers in*

Education (Vol. 7, p. 812013). Frontiers Media SA. https://doi.org/10.3389/feduc.2022.812013

Carvalho, M., Faria, S., Ventura, A., & Azevedo, N. (2022). Using the index for inclusion to measure attitudes and perceptions of inclusion in teacher and school building leader preparation programs in the USA, Portugal, and the Netherlands. *International Journal of Inclusive Education*, *26*(8), 814–830. https://doi.org/10.1080/13603116.2020.1752603

Channa, A., & Faguet, J. P. (2016). Decentralization of health and education in developing countries: a quality-adjusted review of the empirical literature. *The World Bank Research Observer*, *31*(2), 199-241. https://doi.org/10.1093/wbro/lkw001

Chaudhary, M., & Chaudhary, V. K. (2025). Teacher Preparedness and Professional Development for Inclusive Classrooms: A Global and Indian Perspective. *International Journal of Research and Innovation in Applied Science*, *10*(10), 1287-1293. https://dx.doi.org/10.51584/IJRIAS.2025.10100000112

Choiriyah, S. (2022). Inclusive Madrasas in Central Java Indonesia: Culture, Policy, and Practices. *DINIKA: Academic Journal of Islamic Studies*, *7*(2), 251-276. https://doi.org/10.22515/dinika.v7i2.6327

Chow, W. S. E., de Bruin, K., & Sharma, U. (2024). A scoping review of perceived support needs of teachers for implementing inclusive education. *International Journal of Inclusive Education*, *28*(13), 3321-3340. https://doi.org/10.1080/13603116.2023.2244956

Cieza, A., Kamenov, K., Sanchez, M. G., Chatterji, S., Balasegaram, M., Lincetto, O., Servili, C., Bermejo, R., & Ross, D. A. (2021). Disability in children and adolescents must be integrated into the global health agenda. *BMJ*. https:// doi. org/ 10. 1136/ bmj. n9

Clement, T., & Bigby, C. (2009). Breaking out of a distinct social space: Reflections on supporting community participation for people with severe and profound intellectual disability. *Journal of Applied Research in Intellectual Disabilities*, *22*(3), 264-275. https://doi.org/10.1111/j.1468-3148.2008.00458.x

Coakes, S. J., & Steed, L. G. (2003). SPSS analysis without anguish for windows (Version 11.0). *Brisbane: John Wiley & Sons*.

Cohen, L., Manion, L., & Morrison, K. (2007). *Research Methods in Education* (6th ed.). London: Routledge: Taylor & Francis Group.

Cohen, L., Manion, L., & Morrison, K. (2018). *Research Methods in Education* (8th ed.). London:

Routledge: Taylor & Francis Group.

Collins, A., Azmat, F., & Rentschler, R. (2019). 'Bringing everyone on the same journey': revisiting inclusion in higher education. *Studies in higher education*, *44*(8), 1475-1487. https://doi.org/10.1080/03075079.2018.1450852

Colombi Evangelista, V., Del Barone, L., de Gennaro, D., & Buonocore, F. (2025). Disability-inclusive HRM in practice: a qualitative meta-synthesis of barriers and enablers. *Employee Relations: The International Journal*, 1-19. https://doi.org/10.1108/ER-06-2025-0469

Connor, D. J., & Ferri, B. A. (2007). The conflict within: Resistance to inclusion and other paradoxes in special education. *Disability & Society*, *22*(1), 63-77. https://doi.org/10.1080/09687590601056717

Cook, J. E., Purdie-Vaughns, V., Garcia, J., & Cohen, G. L. (2012). Chronic threat and contingent belonging: protective benefits of values affirmation on identity development. *Journal of personality and social psychology*, *102*(3), 479. http://dx.doi.org/10.1037/a0026312

Cortina, J. M. (1993). What is coefficient alpha? An examination of theory and applications. *Journal of Applied Psychology*, *78*(1), 98–104.

Costello, A. B., & Osborne, J. (2005). Best practices in exploratory factor analysis: Four recommendations for getting the most from your analysis. *Practical assessment, research, and evaluation*, *10*(1).

Counts, N. (2015). Accommodating one another: Law and the social model of mental health.*Kansas Journal of Law and Public Policy*, *25*(1), 1-30.

Cramer, E., Little, M. E., & McHatton, P. A. (2018). Equity, equality, and standardization: Expanding the conversations. *Education and Urban Society*, *50*(5), 483-501.https://doi.org/10.1177/0013124517713249

Crespo, C., Santos, S., Canavarro, M. C., Kielpikowski, M., Pryor, J., & Féres-Carneiro, T. (2013). Family routines and rituals in the context of chronic conditions: A review. *International Journal of Psychology*, *48*(5), 729-746. http://dx.doi.org/10.1080/00207594.2013.806811

Creswell, J. (2012). *Educational research: Planning, conducting, and evaluating quantitative and qualitative research* (4th ed). Pearson.

Creswell, J. (2015). *Educational Research: Planning, conducting, and evaluating Quantitative and Qualitative Research* (5th ed.). Tokyo: Pearson

Creswell, J. W., & Plano Clark, V. L. (2018). *Designing and conducting mixed methods research* (3rd ed.). Sage.

Croucher, S. M., & Cronn-Mills, D. (2018). The interpretive paradigm. In *Understanding communication research methods* (pp. 29-36). Routledge.

Cummings, M. I., & Olson, J. D. (2020). The importance and potential of community partnerships in urban schools in an era of high-stakes accountability. *Improving Schools*, *23*(2), 109-124. https://doi.org/10.1177/1365480219880129

Darling, N. (2007). Ecological systems theory: The person in the center of the circles. *Research in human development*, *4*(3-4), 203-217. https://doi.org/10.1080/15427600701663023

Das, S., & Sarkar, R. (2025). Beyond Compliance: Examining the Realities of Disability Inclusion in Indian Schools under the RPwD Act (2016). *Journal of Education, Society and Behavioural Science*, *38*(6), 106-118. https://doi.org/10.9734/jesbs/2025/v38i61444

de Borba, N. J., Ferreira, V. A. S., dos Santos, T. P., & Carvalho, S. (2024). Inclusive Education: Strategies and Impact On Contemporary Society. *Revista Gênero e Interdisciplinaridade*, *5*(03), 182-191. https://doi.org/10.51249/gei.v5i03.2073

Delacre, M., Lakens, D., & Leys, C. (2017). Why psychologists should by default use Welch's t-test instead of Student's t-test. *International Review of Social Psychology*, *30*(1), 92-101. https://doi.org/10.5334/irsp.82

Destiny, E. F., & Lator, C. S. (2024). Inclusive Physical Education in Resource-Constrained Settings: A Systematic Review of Instructional Models, Teacher Readiness, and Policy Implementation. *International Journal of Multidisciplinary Research and Growth Evaluation*, *5*(6), 1760-1776. https://doi.org/10.54660/.IJMRGE.2024.5.6.1760-1776

Devall-Martin, L., & McHolm, S. (2024). Building Bridges Between Policy and Praxis: A Comparative Environmental and Policy Scan of Inclusive Education in Ethiopia and Canada. *Exceptionality Education International*, *34*(1), 131-151.

DeVellis, R. F. (2017). *Scale development: Theory and applications* (4th ed.). Sage.

Dewa CS, Hees H, Trojanowski L, Schene AH(2015) Clinician Experiences Assessing Work Disability Related to Mental Disorders. PLoS ONE 10(3): e0119009. https://doi.org/10.1371/journal.pone.0119009

Doyle, L., Brady, A. M., & Byrne, G. (2009). An overview of mixed methods research. *Journal of research in nursing*, *14*(2), 175-185. https://doi.org/10.1177/1744987116674257

Duke, J., Pillay, H., Tones, M., Nickerson, J., Carrington, S., & Ioelu, A. (2016). A case for rethinking inclusive education policy creation in developing countries. *Compare: A Journal of Comparative and International Education*, *46*(6), 906-928. https://doi.org/10.1080/03057925.2016.1204226

Dysfluency Conference, ODC 2014, 17 - 20 July, 2014, Oxford, United Kingdom), 13-24. https://doi.org/10.1016/j.sbspro.2015.03.240.

Dyson, A. (1999). Inclusion and inclusions: Theories and discourses in inclusive education. In H. Daniels & P. Garner (Eds.), *World yearbook of education 1999: Inclusive education* (pp. 36–53). Routledge.

Dyson, A. (2001). The Gulliford lecture: Special needs in the twenty-first century: where we've been and where we're going. *British journal of special education*, *28*(1), 24-29.

Dyson, A., & Gallannaugh, F. (2007). National policy and the development of inclusive school practices: a case study. *Cambridge Journal of Education*, *37*(4), 473-488. https://doi.org/10.1080/03057640701705690

Echeita, G., & Ainscow, M. (2011). Inclusive education as a process: Defining the concept. *European Journal of Education*, *46*(2), 117–131. https://doi.org/10.1111/j.1465-3435.2011.01489.x

Ekanem, C. E., Jane, F. N., & Chidinma, I. O. (2025). Strengthening Teacher Training and Professional De-velopment in Low-Resource Settings: A Systems Reform Approach. *International Journal of Management & Entrepreneurship Research*, *7*(5), 404-412.

Elsheikh, A. (2023). Explaining inclusive classrooms concept: an overview. *Nafath*, *8*(22). https://doi.org/10.54455/mcn2203

Emong, P., &Eron, L. (2016). Disability inclusion in higher education in Uganda: Status and strategies. *African Journal of Disability*, *5*(1), 1-11. https://doi.org/10.4102/ajod.v5i1.193

Engdawork K, D'Ambruoso L, Hailu T, Yared M, Geletu GM, Baraki SG, Sebsibe E, and Abbott P (2025) "Space to see the future"? A political economy analysis of child and adolescent mental health and well-being in Ethiopia including routes for change. *Front. Sociol.* 9:1488619. *https://dx.doi.org/*10.3389/fsoc.2024.1488619

Ermias Kibreab and Belay Hagos (2024). Including students with visual impairments in local schools of Ethiopia: availability of resources and support services. *Journal of Visual Impairment & Blindness*, *118*(3), 177-189. https://doi.org/10.1177/0145482X241234672

Erwin, E. J. (1993). Friendship and peer relations among children with disabilities. *Exceptional Children*, *59*(5), 442–456. https://doi.org/10.1177/001440299305900507

Esayas Teshome, Bereket Merkine , Shorouk Mohamed, Mitiku Tasisa & Sarfraz Aslam (2025). The practice of inclusive education in Central Ethiopia Regional State: a case study of primary schools. *Education 3-13*, 1-14. https://doi.org/10.1080/03004279.2024.2449462

Ezequiel Molina, Emma Carter, Diego Luna Bazaldua, Adelle Pushparatnam & Nidhi Singal (2025) Teaching for all? Measuring the quality of inclusive practices across eight countries, Compare: A Journal of Comparative and International Education, 55:4, 641-659, https://doi.org/10.1080/03057925.2024.2304293

Fabrigar, L. R., Wegener, D. T., MacCallum, R. C., & Strahan, E. J. (1999). Evaluating the use of exploratory factor analysis in psychological research. *Psychological methods*, *4*(3), 272.

Fajardo, R. A., Goce, E. C., Balbutin, R. R., Matondo, F. L., Lozano, J. A., Sabunod, G. M. M., ... & Yamba, R. B. (2025). The realities of inclusive teaching: Insights from seasoned teachers. *British Journal of Special Education*, *52*(4), 646-658. https://doi.org/10.1111/1467-8578.70060

Fajriyah, R. R., Usiono, U., & Nunzairina, N. (2025). Sustaining Ethical School Culture: A Qualitative Inquiry into Character Formation Practices in Indonesian Primary Education. *Journal of Character and Sustainability*, *1*(1), 12-22. http://dx.doi.org/10.64780/jcas.v1i1.133

Farre, A., & Rapley, T. (2017, November). The new old (and old new) medical model: four decades navigating the biomedical and psychosocial understandings of health and illness. In *Healthcare* (Vol. 5, No. 4, p. 88). MDPI. https://doi.org/10.3390/healthcare5040088

FDRE. (1995). Constitution of the Federal Democratic Republic of Ethiopia. In *National Legislative Bodies* (pp. 1–33). http://www.unhcr.org/refworld/docid/3ae6b5a84.html

Ferri, B. A., & Connor, D. J. (2005). Tools of Exclusion: Race, Disability, and (Re)segregated Education. *Teachers College Record*, *107*(3), 453–474. https://doi.org/10.1111/j.1467-9620.2005.00483.

Field, A. (2013). *Discovering statistics using IBM SPSS Statistics* (4th ed.). Sage.

Field, A. (2024). *Discovering statistics using IBM SPSS statistics*. Sage publications limited.

Field, A.P. (2018). Discovering Statistics Using IBM SPSS Statistics. 5th Edition, Sage, Newbury Park.

Finch, W. H., French, B. F., & Immekus, J. C. (2016). *Applied psychometrics using SPSS and AMOS*. Information Age Publishing.

Finkelstein, S., Sharma, U., & Furlonger, B. (2021). The inclusive practices of classroom teachers: A scoping review and thematic analysis. *International Journal of Inclusive Education*, *25*(6), 735-762. https://doi.org/10.1080/13603116.2019.1572232

Finnigan, K. S., Daly, A. J., & Che, J. (2013). System wide reform in districts under pressure: The role of social networks in defining, acquiring, using, and diffusing research evidence. *Journal of Educational Administration*, *51*(4), 476-497. https://doi.org/10.1108/09578231311325668

Fitriyah, A. (2025). Inclusive Policy Design for Transformative Education: A Global Synthesis of Teacher Identity Formation in Resource-Constrained Contexts. *Sinergi International Journal of Education*, *3*(2), 94-106.

Fiuza Asorey, M. J., Baña Castro, M., & Losada-Puente, L. (2021). Reflections on a school for all: Perceptions of families and teachers regarding the culture, policy, and practice of inclusion in Galicia. *Aula abierta*, *50*(1), 524-534. https://doi.org/10.17811/RIFIE.50.1.2021.525-534

Florian, L. (2008). Inclusion: special or inclusive education: future trends. *British journal of special education*, *35*(4), 202-208.

Florian, L., & Black-Hawkins, K. (2011). Exploring inclusive pedagogy. *British educational research journal*, *37*(5), 813-828. https://doi.org/10.1080/01411926.2010.501096

Folguera, C. (2014). Women with disabilities: Inclusion, forgetting and vindication in an organizational setting. *Equality, Diversity and Inclusion: An International Journal, 33(8),* 776-788. https://doi.org/10.1108/EDI-04-2012-0034

Forlin, C., & Chambers, D. (2011). Teacher preparation for inclusive education: Increasing knowledge but raising concerns. *Asia-Pacific Journal of teacher education*, *39*(1), 17-32. https://doi.org/10.1080/1359866X.2010.540850

Fornell, C., & Larcker, D. F. (1981). Evaluating structural equation models with unobservable variables and measurement error. *Journal of Marketing Research, 18*(1), 39–50.

Foykas, E., Raikou, N., Beazidou, E., & Karalis, T. (2025). Transformative potential in special education: How perceived success, training, exposure, and experience contribute to teacher readiness for inclusive practice. *Education Sciences*, *15*(11), 1476. https://doi.org/10.3390/educsci15111476

Franck, B., & Joshi, D. K. (2017). Including students with disabilities in education for all: Lessons from Ethiopia. *International Journal of Inclusive Education*, *21*(4), 347-360. https://doi.org/10.1080/13603116.2016.1197320

Freeman, R. E., Harrison, J. S., & Wicks, A. C. (2007). *Managing for stakeholders: Survival, reputation, and success*. Yale University Press.

Friend, M., & Bursuck, W. D. (2019). *Including students with special needs: A practical guide for classroom teachers* (8th ed.). Pearson.

Fuchs, D., Gilmour, A. F., & Wanzek, J. (2025). Reframing the most important special education policy debate in 50 years: How versus where to educate students with disabilities in America's schools. *Journal of Learning Disabilities*, *58*(4), 257-273. https://doi.org/10.1177/00222194251315196

Gaad, E. (2004). Cross-cultural perspectives on the effect of cultural attitudes towards inclusion for children with intellectual disabilities. *International Journal of Inclusive Education*, *8*(3), 311-328. https://doi.org/10.1080/1360311042000194645

Gallagher, D. J., Connor, D. J., &Ferri, B. A. (2014). Beyond the far too incessant schism: special education and the social model of disability. *International Journal of Inclusive Education, 18*(11), 1120-1142. https://doi.org/10.1080/13603116.2013.875599.

Gargiulo, R. M., & Bouck, E. C. (2020). *Special education in contemporary society: An introduction to exceptionality*. Sage Publications.

Garrote, A., Dessemontet, R. S., & Opitz, E. M. (2017). Facilitating the social participation of pupils with special educational needs in mainstream schools: A review of school-based interventions. *Educational Research Review*, *20*, 12-23.

Genovesi, E., Gaches, A., McKenzie, J., Hanlon, C., & Hoekstra, R. A. (2024). Inclusive strategies for children with developmental disabilities in mainstream classrooms in African countries: A systematic review of stakeholder experiences, attitudes, and perspectives. *Review of Educational Research*, *95*(6), 1183-1212. https://doi.org/10.3102/00346543241288247

Gerosimou, E. (2012). Inclusion and school culture: the core for the creation of the "School for All". *X-Ray@ Education*, *1*(5), 8-12.

Getachew Walelgn (2025): Inclusive education practices and their legal frameworks for special needs students in Ethiopia, International Journal of Inclusive Education, https://doi.org/10.1080/13603116.2025.2552932

Getahun Solomon. (2021). The Challenges of Inclusive Education in Ethiopia: The Reality on the Ground. *Ethiopian Journal of Education Studies*, *1*(1), 66-75.

Gezahegne Beyene & Yinebeb Tizazu (2010). Attitudes of teachers towards inclusive education in Ethiopia. *Ethiopian Journal of Education and Sciences*, *6*(1).

Graham, L. J. (2020). Inclusive education in the 21st century: Theory, policy and practice. *Oxford Research Encyclopedia of Education*. https://doi.org/10.1093/acrefore/9780190264093.013.1230

Graham, L. J., Medhurst, M., Malaquias, C., Tancredi, H., De Bruin, C., Gillett-Swan, J., ... & Cologon, K. (2023). Beyond Salamanca: A citation analysis of the CRPD/GC4 relative to the Salamanca Statement in inclusive and special education research. *International Journal of Inclusive Education*, *27*(2), 123-145. https://doi.org/10.1080/13603116.2020.1831627

Gravetter, F. J., & Wallnau, L. B. (2017). Introduction to the T Statistic. In F. J. Gravetter, L. B., Wallnau, L.-A. B. Forzano (Eds.), Essentials of Statistics for the Behavioral Sciences. Wadsworth.

Greene, J. C. (2007). *Mixed methods in social inquiry*. Jossey-Bass.

Grima-Farrell, C. R., Bain, A., & McDonagh, S. H. (2011). Bridging the research-to-practice gap: A review of the literature focusing on inclusive education. *Australasian Journal of Special Education*, *35*(2), 117-136. https://doi.org/10.1375/ajse.35.2.117

Gundumogula, V., & Gundumogula, S. R. (2020). Importance of focus groups in qualitative research. *International Journal of Humanities and Social Science Research*, *6*(1), 17–20.

Gut, D. (2012). Critical components of successful inclusion of students with severe disabilities: Literature review. *International journal of special education*.

Haegele, J. A. & Hodge, S. (2016). Disability Discourse: Overview and Critiques of the Medical and Social Models, *Quest*, *68*(2), 193-206, https://doi.org/10.1080/00336297.2016.1143849.

Hailemariam, M., Bustos, T., Montgomery, B., Barajas, R., Evans, L. B., & Drahota, A. (2019). Evidence-based intervention sustainability strategies: a systematic review. *Implementation Science*, *14*(1), 1-12. https://doi.org/10.1186/s13012-019-0910-6

Hair, J. F., Black, W. C., Babin, B. J., & Anderson, R. E. (2010). *Multivariate data analysis* (7th ed.). Pearson.

Hair, J. F., Black, W. C., Babin, B. J., & Anderson, R. E. (2014). *Multivariate Data Analysis* (7th ed.). Pearson.

Hair, J. F., Black, W. C., Babin, B. J., & Anderson, R. E. (2019). *Multivariate data analysis* (8th ed.). Cengage Learning.

Hankin, D., Mohr, M. S., & Newman, K. B. (2019). *Sampling theory: For the ecological and natural resource sciences*. Oxford University Press, USA.

Hata, A., Yuwono, J., Purwana, R., & Nomura, S. (2021). *Embracing diversity and inclusion in Indonesian schools: Challenges and policy options for the future of inclusive education*. Washington, DC: World Bank. https://doi.org/10.1596/36533

Hatzipanagiotou, P. (2008). The role of culture in the effectiveness of the school organization MINEDU, integration of children of returnees and foreigners in the school (junior high school). *Training guide. Intercultural education and training*.

Haug, P. (2017). Understanding inclusive education: ideals and reality. *Scandinavian journal of disability research*, *19*(3), 206-217. https://doi.org/ 10.1080/15017419.2016.1224778

Hayes, A. F. (2018). *Introduction to mediation, moderation, and conditional process analysis: A regression-based approach.* (2nd ed.). New York, NY: The Guilford Press.

Hayes, A. F., & Preacher, K. J. (2014). Statistical mediation analysis with a multi-categorical independent variable. *British Journal of Mathematical and Statistical Psychology*, *67*(3), 451-470.

Hayes, A. M., and Bulat, J., (2017). Disabilities Inclusive Education Systems and Policies Guide for Low- and Middle-Income Countries. RTI Press Publication No. OP-0043-1707. Research Triangle Park, NC: RTI Press. https://doi.org/10.3768/rtipress.2017.op.0043.1707

Hayes, T., Murtinho, F., Basurto, X., & Grillos, T. (2025). How rules shape participation in communal resource management decisions: The institutional analysis and development

framework as a tool to assess inclusive decision-making. *Conservation Science and Practice*, e70206. https://doi.org/10.1111/csp2.70206

Henseler, J., Ringle, C. M., & Sarstedt, M. (2015). A new criterion for assessing discriminant validity in variance-based structural equation modeling. *Journal of the Academy of Marketing Science, 43*(1), 115–135.

Hill, M., & Hupe, P. (2002). *Implementing public policy: Governance in theory and in practice*. Sage.

Ho, R. (2006). *Handbook of univariate and multivariate data analysis and interpretation with IBM SPSS*. Chapman & Hall/CRC.

Hoelter, J. W. (1983). The analysis of covariance structures: Goodness-of-fit indices. *Sociological Methods & Research, 11*(3), 325–344.

Honig, M. (2006). Complexity and policy implementation. *New directions in education policy implementation: Confronting complexity*, *63*, 1-25.

Hooper, D., Coughlan, J., & Mullen, M. R. (2008). Structural equation modelling: Guidelines for determining model fit. *Electronic Journal of Business Research Methods, 6*(1), 53–60.

Howell, D. C. (2013). Statistical methods for psychology 8th Edition, (Belmont, CA: Wadsworth Cengage Learning).

Hsien, M., Brown, P. M., & Bortoli, A. (2009). Teacher qualifications and attitudes toward inclusion. *Australasian Journal of Special Education*, *33*(1), 26-41. https://doi.org/10.1375/AJSE.33.1.26

Hu, L.-T., & Bentler, P. M. (1999). Cutoff criteria for fit indexes in covariance structure analysis: Conventional criteria versus new alternatives. *Structural Equation Modeling: A Multidisciplinary Journal, 6*(1), 1–55.

Hudgins, K. S. (2012). Creating a collaborative and inclusive culture for students with special education needs. *McNair Scholars Research Journal*, *5*(1), 8. https://commons.emich.edu/mcnair/vol5/iss1/8

Iemmi, V., Gibson, L., Blanchet, K., Suresh, K., & Kuper, H. (2015). Community-based rehabilitation for people with physical and mental disabilities in low- and middle-income countries: a systematic review and meta-analysis, *Journal of Development Effectiveness*, 8(3), 368-387. https://doi.org/10.1080/19439342.2016.1157623

Ineland, J. (2015). Logics and ambivalence–professional dilemmas during implementation of an inclusive education practice. *Education Inquiry*, *6*(1), 26157. https://doi.org/10.3402/edui.v6.26157

Innstrand, S. T., & Grødal, K. (2021). Antecedents and consequences of perceived inclusion in academia. *International Journal of Environmental Research and Public Health*, *19*(1), 431. https://doi.org/10.3390/ijerph19010431

Ivankova, N. V., Creswell, J. W., & Stick, S. L. (2006). Using mixed-methods sequential explanatory design: From theory to practice. *Field methods*, *18*(1), 3-20. https://doi.org/10.1177/1525822X05282

Iyassu, S. A., & McKinnon, F. (2021). Disability rights are human rights: Pushing Ethiopia towards a rights-based movement. *Northwestern Journal of Human Rights, 19*(1), 51–61. https://scholarlycommons.law.northwestern.edu/njihr/vol19/iss1/5

Jaffer Lola (2018). Mind the gap: Implementation challenges to the transition towards inclusive education in East African Country. International Journal of Scientific and Research Publications, 8(1), 442-448.

Johnson, L. S. (2009). School contexts and student belonging: A mixed methods study of an innovative high school. *School Community Journal*, *19*(1), 99-118.

Johnson, R. B., & Onwuegbuzie, A. J. (2004). Mixed methods research: A paradigm whose time has come. *Educational Researcher, 33*(7), 14–26.

Junaidi, A. R., Dewantoro, D. A., Shanti, P., & Rahmita, G. (2022). Inclusive education in higher education: Baseline study at Universitas Negeri Malang. *Journal of ICSAR, 6*(2), 196-204. https://doi.org/10.17977/um005v6i22022p196

Kamchedzera, E. T. (2010). *Education of pupils with disabilities in Malawi's inclusive secondary schools: policy, practice and experiences* [Doctoral dissertation]. University of Warwick. http://go.warwick.ac.uk/wrap/55933

Kamenopoulou, L. (2022). *Inclusive education for learners with multisensory impairment: best practices and research priorities*. McGraw-Hill Education (UK).

Kanter, A. S. (2017, September 16). *The right to inclusive education for students with disabilities under international human rights law* [Preprint]. SSRN. https://ssrn.com/abstract=3038006

Kawser, H. (2024). Methodologies to ensure inclusive education for the students with special needs. https://doi.org/10.34293/sijash.v11is1-nov.7095

Kebede, A. T., & Phasha, T. N. (2024). Developing teachers' competency for inclusive education in Ethiopia. *African Journal of Disability*, *13*, 1383. https://doi.org/10.4102/ajod.v13i0.1383

Kelemu Zelalem & Derib Gobie (2023) Adequacy of capacity building and stakeholder involvement in decentralized education management: Evidence from Ethiopia, Cogent Social Sciences, 9:2, 2247151, https://doi.org/10.1080/23311886.2023.2247151

Khan, N. (2020). Critical review of sampling techniques in the research process in the world. *Available at SSRN 3572336*.

Khazanchi, P., & Khazanchi, R. (2021). Pedagogical practices in teaching students with disabilities in inclusive education. In *Handbook of Research on Critical Issues in Special Education for School Rehabilitation Practices* (pp. 66-86). IGI Global Scientific Publishing. https://doi.org/10.4018/978-1-7998-7630-4.CH004

Kim, J., Florian, L., & Pantić, N. (2022). The development of inclusive practice under a policy of integration. *International Journal of Inclusive Education*, *26*(10), 1068-1083. https://doi.org/10.1080/13603116.2020.1773946

Kivunja, C., & Kuyini, A. B. (2017). Understanding and applying research paradigms in educational contexts. *International Journal of Higher Education*, *6*(5), 26-41. https://doi.org/10.5430/ijhe.v6n5p26

Kline, R. B. (2016). *Principles and practice of structural equation modeling* (4th ed.). Guilford Press.

Kline, R. B. (2023). *Principles and practice of structural equation modeling* (5th ed.). Guilford Press.

Klingner, J. K., & Boardman, A. G. (2011). Addressing the "research gap" in special education through mixed methods. *Learning Disability Quarterly*, *34*(3), 208-218. https://doi.org/10.1177/0731948711417559

Kocha, D. F., & Senapathy, M. (2022). Practice and Challenges of the Implementation of Inclusive Education Strategy in Secondary Schools: The Case of Gofa Zone, Southern Ethiopia. *Shanlax International Journal of Education*, *11*(1), 94-111. https://doi.org/10.34293/education.v11i1.5177

Kolenikov, S., & Bollen, K. A. (2012). Testing negative error variances: Is a Heywood case a symptom of misspecification? *Sociological Methods & Research*, *41*(1), 124–167.

Konstantinos, M., Paraskevi, S., Marianthi, D., & Aikaterini, B. (2023). Book review: Index for inclusion. *World Journal of Advanced Research and Reviews*, *18*(1), 1001-1005. https://doi.org/10.30574/wjarr.2023.18.1.0713

Koster, M., Nakken, H., Pijl, S. J., & Van Houten, E. (2009). Being part of the peer group: A literature study focusing on the social dimension of inclusion in education. *International journal of inclusive education*, *13*(2), 117-140. https://doi.org/10.1080/13603110701284680

Koutsouris, G., Bremner, N., & Stentiford, L. (2024). Do we have to rethink inclusive pedagogies for secondary schools? A critical systematic review of the international literature. *British Educational Research Journal*, *50*(1), 260-286. https://doi.org/10.1002/berj.3926

Kroesch, A. M., & Peeples, K. N. (2021). High school general education teachers' perceptions of students with significant disabilities in inclusive settings. *Research, Advocacy, and Practice for Complex and Chronic Conditions*, *40*(1), 26-41. https://doi.org/10.14434/rapcc.v40i1.31756

Krueger, R. A., & Casey, M. A. (2015). *Focus groups: A practical guide for applied research* (5th ed.). Sage.

Kugelmass, J. W. (2006). Sustaining cultures of inclusion: The value and limitation of cultural analyses. *European Journal of Psychology of Education, 21*(3), 279–292. https://doi.org/10.1007/BF03173414

Kumar, P. (2015). Mixed method design in disability and rehabilitation researches. *International Journal of Advanced Research in Education & Technology*, *2*(4), 2-5.

Kunwar, I. B. (2023). Exploring Key Elements for Effective Implementation of Inclusive Education in Nepal. *Butwal Campus Journal*, *6*(1), 72-82. https://doi.org/10.3126/bcj.v6i1.62964

Kuroda, K., Kartika, D., & Kitamura, Y. (2017). Implications for teacher training and support for inclusive education in Cambodia: An empirical case study in a developing country.

Kurto, H., & Asaro-Saddler, K. (2025). Influences on least restrictive environment and inclusion. *Preventing School Failure: Alternative Education for Children and Youth*, *69*(4), 360-369. https://doi.org/10.1080/1045988X.2025.2506046

Lampert, M., Boerst, T., & Graziani, F. (2011). Organizational resources in the service of school-wide ambitious teaching practice. *Teachers College Record*, *113*(7), 1361-1400. https://doi.org/10.1177/016146811111300706

Lee, J. (2017). Why have policies often remained symbolic? Understanding the reasons for decoupling between policy and practice. *Review of Policy Research*, *34*(5), 617-635. https://doi.org/10.1111/ropr.12241

Li, L., & Ruppar, A. (2021). Conceptualizing teacher agency for inclusive education: A systematic and international review. *Teacher Education and Special Education*, *44*(1), 42-59. https://doi.org/10.1177/0888406420926976

Lidetu Yimer (2020).*The Practice and Challenges in the Implementation of Inclusive Approach to Teaching: A Comparative Case Analysis of Selected Government and Non-government Primary Schools in Addis Ababa* [Doctoral dissertation]. Addis Ababa University.

Lincoln, Y. S., & Guba, E. G. (1985). Naturalistic Inquiry; Sage Publications: Newbury Park.

Lindner, K. T., & Schwab, S. (2025). Differentiation and individualization in inclusive education: a systematic review and narrative synthesis. *International journal of inclusive education*, *29*(12), 2199-2219. https://doi.org/10.1080/13603116.2020.1813450

Liu, N., Tang, S. Y., Zhan, X., & Lo, C. W. H. (2018). Political commitment, policy ambiguity, and corporate environmental practices. *Policy Studies Journal*, *46*(1), 190-214.

Loreman, T., Sharma, U., & Forlin, C. (2013). Do pre-service teachers feel ready to teach in inclusive classrooms? A four country study of teaching self-efficacy. *Australian Journal of Teacher Education (Online)*, *38*(1), 27-44. https://doi.org/10.14221/ajte.2013v38n1.10

Love, H. R., Cook, B. G., & Cook, L. (2022). Mixed–methods approaches in special education research. *Learning Disabilities Research & Practice*, *37*(4), 314-323. https://doi.org/10.1111/ldrp.12295

Luca, D. (2016). Do bureaucracies enhance or constrain policy effectiveness? Evidence from Turkey's central Management of Public Investment. *Evidence from Turkey's Central Management of Public Investment (April 26, 2016). LEQS Paper*, (109).

Ludago, T. B. (2020). Practices, challenges and opportunities of inclusive education implementation in Kambata Tambaro Zone, Ethiopia. *Open access library journal*, *7*(2), 1-23. https://doi.org/10.4236/oalib.1105989

Lundy, L. (2007). 'Voice'is not enough: conceptualizing Article 12 of the United Nations Convention on the Rights of the Child. *British educational research journal*, *33*(6), 927-942. https://doi.org/10.1080/01411920701657033

Lynn, M. R. (1986). Determination and quantification of content validity. *Nursing Research, 35*(6), 382–385. https://doi.org/10.1097/00006199-198611000-00017

MacCallum, R. C., Browne, M. W., & Sugawara, H. M. (1996). Power analysis and determination of sample size for covariance structure modeling. *Psychological Methods, 1*(2), 130–149.

Mackelprang, R., & Salsgiver, R. (2021). *Disability: A diversity model approach in human service practice* (3rd ed.). Oxford University Press.

Mahider Solomon. (2013). Benefits and Experiences of Inclusive Education Programme for Physically Disabled Pupils at Public Primary School in Bishoftu Town, South-East Ethiopia. Research Project. Indira Gandhi National Open University. http://www.repository.smuc.edu.et.

Majoko, T. (2018). Inclusion of Children with Autism Spectrum Disorders in Mainstream Primary School Classrooms: Zimbabwean Teachers' Experiences. *International Journal of Special Education*, *33*(3), 630-656.

Malata, L. N., & Muzata, K. K. (2022). Lesson preparation for inclusive teaching of learners with disabilities from grade 1 to 7 at Kankumba Primary School. *International Journal of Educational Innovation and Research*, *1*(2), 149-162. https://doi.org/10.31949/ijeir.v1i2.2492

Marchan, C. B., Tenerife-Cañete, J. J., Añora, H., & Pinili, L. (2025). Instructional Practices and Challenges of Teachers in Supporting Special Needs Students in Inclusive Settings. *International Journal of Educational Studies*, *8*(3), 55-65. https://academiainsight.com/index.php/ijes/article/view/366/195

Maree, C., Condy, J., & Meda, L. (2023). Exploring teachers' experiences in implementing the Screening, Identification, Assessment, and Support policy in South Africa. *South African Journal of Education*, *43*(3), 1-8. , https://doi.org/10.15700/saje.v43n3a2228

Marsh, H. W., & Hocevar, D. (1985). Application of confirmatory factor analysis to the study of self-concept: First- and higher-order factor models and their invariance across groups. *Psychological Bulletin, 97*(3), 562–582.

Martin, M. (2026). Lens of Inclusive Education: School Heads and Classroom Teachers' Perspectives on Policy Implementation and Institutional Challenges in the Philippines. *International Journal of Learning, Teaching and Educational Research, 25(1), pp. 604-622.* https://doi.org/10.26803/ijlter.25.1.29

Mateus Cifuentes, LE, Vallejo Moreno, DM, Obando Posada, D., & Fonseca Durán, L. (2017). Perception of practices and inclusive culture in a school setting. *Advances in Latin American Psychology*, *35*(1),177-191. https://doi.org/10.12804/REVISTAS.UROSARIO.EDU.CO/APL/A.4854

Matheas Shemelis, Tamirat Tadesse & Ambissa Kenea (2025) Integration of postmodern perspectives in curriculum & instruction in Ethiopian schools, Cogent Education, 12:1, 2447165. https://doi.org/10.1080/2331186X.2024.2447165

Mathias, B. A. (2015). Inclusive education for the disabled: A study of blind students in Nnami Azikiwe University, Awka, Nigeria. In *Disability studies: Educating for inclusion* (pp. 105-116). Rotterdam: SensePublishers. https://doi.org/10.1007/978-94-6300-199-1_7

Mazzuki, B. D. (2025). Preparing teachers for inclusive education: Pre-service teachers' knowledge, perceptions and experiences of inclusive pedagogy from teaching practice. *Center for Educational Policy Studies Journal*. 1-21. https://doi.org/10.26529/cepsj.1807

McClam, R. S., Shelton, A., Shepard, L. R., Cruz, R. A., Caroleo, S. A., & Love, M. L. (2025). Inclusion in the time of anti-DEIA: lessons learned from a research-practice partnership promoting a critical inclusion framework for students with disabilities. *School-University Partnerships*, 1-21. https://doi.org/10.1108/SUP-05-2025-0026

McClimens, A., & Burns, S. (2015). Looking after people with learning disabilities: Who cares? *Learning Disability Practice (2014+)*, *18*(10), 31-35. https://doi.org/10.7748/ldp.18.10.31.s21

McDonnell, P. (2003). Developments in special education in Ireland: deep structures and policy making. *International Journal of Inclusive Education*, *7*(3), 259-269. https://doi.org/10.1080/1360311032000108876

McLeskey, J. M., Rosenberg, M. S., & Westling, D. L. (2012). *Inclusion: Effective practices for all students* (2nd ed.). Pearson Education.

McMaster, C. (2013). Working the 'shady spaces': Resisting neoliberal hegemony in New Zealand education. In M. Ainscow & A. Dyson (Eds.), *From exclusion to inclusion: Ways of responding to tensions in schooling* (pp. 239–248). CfBT Education Trust.

McMaster, C. (2015). "Where Is _?": Culture and the Process of Change in the Development of Inclusive Schools. *International Journal of Whole Schooling*, *11*(1), 16-34.

Mertens, D. M. (2015). Mixed methods and wicked problems. *Journal of mixed methods research*, *9*(1), 3-6. https://doi.org/10.1177/1558689814562944

Mertler, C. A., & Reinhart, R. V. (2017). *Advanced and multivariate statistical methods: Practical application and interpretation* (6th ed.). Routledge.

Meseret Assefa. (2018). *Implementation and Challenges of Inclusive Education in Harari Regional State in Selected Schools* [*Unpublished master thesis*]. Addis Ababa University. http://etd.aau.edu.et/ handle/123456789/17104.

Meskerem Ayele. (2017). Provision of Inclusive Pedagogy; Support System in Effect among Public Primary Schools in Southern Ethiopia. *Journal of Humanities and Social Science* 22 (6): 92– 100. https://doi.org/10.9790/0837-22060292100.

Meyer, A., Rose, D. H., & Gordon, D. (2014). *Universal Design for Learning: Theory and Practice.* CAST.

Meyers, L. S., Gamst, G., & Guarino, A. J. (2006). Multiple regression. *Applied multivariate research: Design and interpretation*, 147-196.

Miles, S., & Singal, N. (2010). The Education for All and inclusive education debate: Conflict, contradiction or opportunity? *International Journal of Inclusive Education*, *14*(1), 1–15.

Miller, A. L., Wilt, C. L., Allcock, H. C., Kurth, J. A., Morningstar, M. E., & Ruppar, A. L. (2022). Teacher agency for inclusive education: An international scoping review. *International Journal of Inclusive Education*, *26*(12), 1159-1177. https://doi.org/10.1080/13603116.2020.1789766

Mitchell, D. (2014). *What really works in special and inclusive education: Using evidence-based teaching strategies* (2nd ed.). Routledge.

Mitchell, J, and Xavier, F. (2017). Evidence-based policy in Ethiopia: A diagnosis of failure. *Development Southern Africa* 34 (1), 121-136. https://doi.org/10.1080/0376835X.2016.1231056

Mittler, P. (2000). *Working towards inclusive education: Social contexts*. David Fulton.

MoE (2012). *Special needs/inclusive education strategy*. *The Federal Democratic Republic of Ethiopia. Addis Ababa.* (Issue July, pp. 1–22)

MoE. (1994). *Education and Training Policy. Federal Democratic Republic Government of Ethiopia*. ST. GEORGE PRINTING PRESS.

MoE. (2010). *Education Sector Development Program IV (ESDP IV). The Federal Democratic Republic of Ethiopia. Addis Ababa.* (pp. 1–114).

MoE. (2012a). *Guideline for Curriculum Differentiation and Individual Education Programme. The Federal Democratic Republic of Ethiopia. Addis Ababa.* 1–68.

MoE. (2012b). *Special Needs / Inclusive Education Strategy. The Federal Democratic Republic of Ethiopia. Addis Ababa.* (Issue July, pp. 1–22).

MoE. (2015a). Education Sector Development Programme V (ESDP V). The Federal Democratic Republic of Ethiopia. Addis Ababa. Esdp V.

MoE. (2015b). Guideline for Establishing and Managing Inclusive Education Resource / Support Centers (RCs). The Federal Democratic Republic of Ethiopia. Addis Ababa.

MoE. (2015c). Professional standards for special needs education teachers. The Federal Democratic Republic of Ethiopia. Addis Ababa. (Issue February, pp. 1–12).

MoE. (2016). *A Master Plan for Special Needs Education/Inclusive Education in Ethiopia 2016-2025. The Federal Democratic Republic of Ethiopia. Addis Ababa.*(October, pp. 1–72).

MoE. (2021). *Education Statistics Annual Abstract (ESAA). The Federal Democratic Republic of Ethiopia. Addis Ababa.*

MoE. (2022). Special Needs/Inclusive Education Strategy Emphasizing on access, equity and inclusion to achieve sustainable development goal 4 (2022/23-2029/30). *The Federal Democratic Republic of Ethiopia. Addis Ababa.*

MoE. (2023). The new Ethiopian Education and Training Policy (p. 29). www.moe.gov.et

Molalign Belay (2021). *The quest for inclusion in overcoming stigma: A constructivist grounded theory study with children with physical disabilities in Ethiopia* [Doctoral dissertation]. Queen's University.

Molina, E., Carter, E., Luna Bazaldua, D., Pushparatnam, A., & Singal, N. (2025). Teaching for all? Measuring the quality of inclusive practices across eight countries. *Compare: A Journal of Comparative and International Education*, *55*(4), 641-659. https://doi.org/10.1080/03057925.2024.2304293

Moliner, O., Sales, A., & Traver, J. (2011). Building inclusive education from the ground up: The transformative experience of the Index for Inclusion in Spain. *International Journal of Inclusive Education*, *15*(10), 1087–1101. https://doi.org/10.1080/13603116.2011.573664

Morgan, D. L. (1997). *Focus groups as qualitative research* (2nd ed.). Sage.

Morningstar, M. E., Shogren, K. A., Lee, H., & Born, K. (2015). Preliminary lessons about supporting participation and learning in inclusive classrooms. *Research and Practice for Persons with Severe Disabilities*, *40*(3), 192-210. https://doi.org/10.1177/1540796915594158

Muhamad, A. (2026). Factors Affecting Effective Implementation of Inclusive Education Policy in Primary Schools in Central Uganda. *Journal of Research in Education and Technology*, *4*(1), 1-14. https://doi.org/10.69897/joret.v4i1

Muhammad, A. E., & Liu, Y. (2025). Effect of teacher education initiatives in shaping preservice teachers' perceptions of and self-efficacy in implementing inclusive education. *Australasian Journal of Special and Inclusive Education*, 1-17. https://doi.org/10.1017/jsi.2025.10006

Mukhopadhyay, S., & Moswela, E. (2010). Inside Practice of Science Teachers for Students with Hearing Impairments in Botswana Primary Schools. *International Journal of Special Education*, *25*(3), 57-67.

Mukhopadhyay, S., Nenty, H. J., & Abosi, O. (2012). Inclusive education for learners with disabilities in Botswana primary schools. *Sage Open*, *2*(2). https://doi.org/10.1177/2158244012451584

Mulaik, S. A., James, L. R., Van Alstine, J., Bennett, N., Lind, S., & Stilwell, C. D. (1989). Evaluation of goodness-of-fit indices for structural equation models. *Psychological Bulletin*, *105*(3), 430–445.

Müllegger, B., and Chapman, S. (2024). "Inclusion of Children with Disabilities in Ethiopian Mainstream Schools. An Implementation Evaluation of an Inclusive Education Programme." *AlterResearch* 18 (1): 23–45. https://doi.org/10.4000/vyi8.

Muluken Ayele. (2017). Provision of Inclusive Pedagogy; Support System in Effect among Public Primary Schools in Southern Ethiopia. *IOSR Journal of Humanities and Social Science*, 22(6), 92–100. https://doi.org/10.9790/0837-22060292100

Mustafa, F. U. (2025). Navigating Contradictions in Sustainable Education Reform through Teacher Agency and Institutional Dynamics. *Social Science Review Archives*, *3*(2), 2099-2108. https://doi.org/10.70670/sra.v3i2.832

Naraian, S. (2014). Agency in real time? Situating teachers' efforts toward inclusion in the context of local and enduring struggles. *Teachers College Record*, *116*(6), 1-38. https://doi.org/10.1177/016146811411600601

Neal, J. W., & Neal, Z. P. (2013). Nested or networked? Future directions for ecological systems theory. *Social development*, *22*(4), 722-737. https://doi.org/10.1111/sode.12018

Negash, I., & Yadavalli, K. (2020). A Review of Educational, Psycho-Social, and Attitudinal Challenges in Addressing the Needs of Students with Disabilities in Inclusive Education. *International Journal of Psychosocial Rehabilitation*, *24*(08). https://doi.org/10.61841/v24i8/400269

Nevitt, J., & Hancock, G. R. (2001). Performance of bootstrapping approaches to model test statistics and parameter standard error estimation in structural equation modeling. *Structural Equation Modeling: A Multidisciplinary Journal, 8*(3), 353–377.

Nighswander, M. L., & Blair, P. A. (2024). From institutions to inclusion: How children with disabilities gained educational rights in the US. *The Journal of School Nursing*, *40*(1), 108-118. https://doi.org/10.1177/10598405221105054

Njelesani, J., Cleaver, S., Tataryn, M., & Nixon, S. (2012). Using a human rights-based approach to disability in disaster management initiatives. *Natural disasters*, 21-46. https://doi.org/10.5772/32319

Norman, G. (2010). Likert scales, levels of measurement and the "laws" of statistics. *Advances in health sciences education*, *15*(5), 625-632. https://doi.org/10.1007/s10459-010-9222-y

Nunnally, J. C. (1978). *Psychometric theory* (2nd ed.). McGraw-Hill.

Nyimbili, F., & Nyimbili, L. (2024). Types of purposive sampling techniques with their examples and application in qualitative research studies.

Nyumba, T. O., Wilson, K., Derrick, C. J., & Mukherjee, N. (2018). The use of focus group discussion methodology: Insights from two decades of application in conservation. *Methods in Ecology and Evolution, 9*(1), 20–32.

Odom, S. L., Brantlinger, E., Gersten, R., Horner, R. H., Thompson, B., & Harris, K. R. (2005). Research in special education: Scientific methods and evidence-based practices. *Exceptional children*, *71*(2), 137-148.

Ohemeng, F. (2010). The dangers of internationalization and "one-size-fits-all" in public sector management: Lessons from performance management policies in Ontario and Ghana. *International Journal of Public Sector Management*, *23*(5), 456-478. https://doi.org/10.1108/09513551011058484

Ojeme, E. O., & Destiny, E. F. (2023). Implementing Inclusive Physical Education in Public Secondary Schools: Teachers' Attitudes, Pedagogical Practices, and Institutional Constraints in a Cross-Sectional Study. *International Journal of Multidisciplinary Research and Growth Evaluation*, 4(6), 1379-1393. https://doi.org/10.54660/.ijmrge.2023.4.6.1379-1393

Okyere, C., Aldersey, H. M., Lysaght, R., & Sulaiman, S. K. (2019). Implementation of inclusive education for children with intellectual and developmental disabilities in African countries: A scoping review. *Disability and rehabilitation*, *41*(21), 2578-2595. https://doi.org/10.1080/09638288.2018.1465132

Oliveira, B. R. D., & Peixoto, M. D. C. D. L. (2021). Street-level bureaucracy and public policies: analyzing educational policy implementation from the perspective of schools and teachers. *Educação em Revista*, *37*, e219212. http://dx.doi.org/10.1590/0102-4698219212

Oliver, M. (1983). *Social Work with Disabled People*. London, UK: Palgrave Macmillan.

Oliver, M. (1996). Understanding Disability: From Theory to Practice (Chapter 3, pp. 30-42). New York: St. Martin's Press. https://doi.org/10.1007/978-1-349-24269-6

Oliver, M. (2013). The social model of disability: Thirty years on. *Disability & Society*, *28*(7), 1024–1026. https://doi.org/10.1080/09687599.2013.818773

Olofsson, M. (2026). Inclusion on fragile ground: Supporting students with special educational needs in Swedish work-based learning. *Journal of Research in Special Educational Needs*, *26*(2), e70065. https://doi.org/10.1111/1471-3802.70065

Olszewska, M. (2025). Inclusion practices in early childhood education in the United States–a case study. *Niepełnosprawność*, (55-56), 121-134. https://doi.org/10.26881/ndps.2025.55/56.07

Olusanya, B. O., Kancherla, V., Shaheen, A., Ogbo, F. A., & Davis, A. C. (2022). Global and regional prevalence of disabilities among children and adolescents: Analysis of findings from global health databases. *Frontiers in public health*, *10*, 977453. https://doi.org/10.3389/fpubh.2022.977453

Olusanya, B. O., Wright, S. M., Nair, M. K. C., Boo, N. Y., Halpern, R., Kuper, H., ... & Global Research on Developmental Disabilities Collaborators (GRDDC). (2020). Global burden of childhood epilepsy, intellectual disability, and sensory impairments. *Pediatrics*, *146*(1). https://doi.org/10.1542/peds.2019-2623

Opoku, M. P., Rayner, C. S., Pedersen, S. J., & Cuskelly, M. (2021). Mapping the evidence-based research on Ghana's inclusive education to policy and practices: a scoping review. *International Journal of Inclusive Education*, *25*(10), 1157-1173. https://doi.org/10.1080/13603116.2019.1600055

Opoku-Nkoom, I., & Ackah-Jnr, F. R. (2023). Investigating inclusive education in primary schools in Ghana: what inclusive cultures, environment, and practices support implementation?. *Support for Learning*, *38*(1), 17-36. https://doi.org/10.1111/1467-9604.12435

Osgood, R. (2005). The History of Inclusion in the United States. Washington, DC: Gallaudet University Press.

Palei, P. (2024). Inclusive teaching competency for successful implementation of inclusive education. *International Journal for Multidisciplinary Research*, *6*(2).

Palinkas, L. A., Horwitz, S. M., Green, C. A., Wisdom, J. P., Duan, N., & Hoagwood, K. (2015). Purposeful sampling for qualitative data collection and analysis in mixed-method implementation research. *Administration and policy in mental health and mental health services research*, *42*(5), 533-544. https://doi.org/10.1007/s10488-013-0528-y.

Paliokosta, P., & Blandford, S. (2010). Inclusion in school: a policy, ideology or lived experience? Similar findings in diverse school cultures. *Support for Learning*, *25*(4), 179-186. https://doi.org/10.1111/j.1467-9604.2010.01464.x

Pallant, J. (2016). *SPSS survival manual: A step by step guide to data analysis using IBM SPSS* (6th ed.). McGraw-Hill Education.

Park, Y. S., Konge, L., & Artino Jr, A. R. (2020). The positivist paradigm of research. *Academic medicine*, *95*(5), 690-694. https://doi.org/10.1097/acm.0000000000003093

Pasira, I. (2022). Assessing the effectiveness of differentiated instruction strategies in diverse classrooms. *Journal of Education Review Provision*, *2*(1), 31-36. https://doi.org/10.55885/jerp.v2i1.151

Pather, S., Tadesse, A., & Gizachew, S. (2021). Moving toward inclusive education in Ethiopia through itinerant teachers at resource centers. In *Oxford Research Encyclopedia of Education*. https://doi.org/10.1093/acrefore/9780190264093.013.438

Patton, M. Q. (2015). Qualitative research & evaluation methods: Integrating theory and practice (4th ed.). SAGE Publications.

Peacock, G., Iezzoni, L. I., & Harkin, T. R. (2015). Health care for Americans with disabilities -- 25 years after the ADA. *The New England Journal of Medicine*, *373*(10), 892-893. https://doi.org/10.1056/NEJMp1508854.

Penuel, W. R., Riel, M., Joshi, A., Pearlman, L., Kim, C. M., & Frank, K. A. (2010). The alignment of the informal and formal organizational supports for reform: Implications for improving teaching in schools. *Educational administration quarterly*, *46*(1), 57-95. http://dx.doi.org/10.1177/1094670509353180

Pijl, S. J. (1997). Factors in inclusion: a framework. In S. J. Pijl, C. J. W. Meijer, & S. Hegarty (Eds.), *Inclusive education. A global agenda* (pp. 8 - 13). Routledge.

Pocock, T., & Miyahara, M. (2018). Inclusion of students with disability in physical education: a qualitative meta-analysis. *International Journal of Inclusive Education*, *22*(7), 751-766. https://doi.org/10.1080/13603116.2017.1412508

Polat, F. (2011). Inclusion in education: A step towards social justice. *International journal of educational development*, *31*(1), 50-58. https://doi.org/10.1016/j.ijedudev.2010.06.009

Polit, D. F., & Beck, C. T. (2006). The content validity index: Are you sure you know what's being reported? Critique and recommendations. *Research in Nursing & Health*, *29*(5), 489–497. https://doi.org/10.1002/nur.20147

Powell, J. J., Edelstein, B., & Blanck, J. M. (2019). Awareness-raising, legitimation or backlash? Effects of the UN Convention on the Rights of Persons with Disabilities on education systems in Germany. In *The Power of Numbers and Networks* (pp. 77-100). Routledge. http://dx.doi.org/10.1080/14767724.2014.982076

Pretorius, L. (2024). Demystifying research paradigms: Navigating ontology, epistemology, and axiology in research. *The Qualitative Report*, *29*(10), 2698-2715. https://doi.org/10.46743/2160-3715/2024.7632

Priestley, M., Biesta, G.J.J., Philippou, S. & Robinson, S. (2015). The teacher and the curriculum: exploring teacher agency. In D. Wyse, L. Hayward & J. Pandya (Eds.), *The SAGE Handbook of Curriculum, Pedagogy and Assessment*. London: SAGE Publications Ltd

Putri, F. A. T. (2025). Implementation of Legal Protection and Human Rights for Children and Persons with Disabilities in Indonesia. *International Journal of Social Research*, *3*(3), 123-133.

Rahmi, I., Desvianti, E., Mufitasari, D., & Ariyanti, T. D. (2024). Evaluation of inclusive education in Indonesia: Elementary school teachers' perspective. *Jurnal RAP (Riset Aktual Psikologi Universitas Negeri Padang)*, *15*(1), 75.

Ramírez-Solórzano, F. L., & Herrera-Navas, C. D. (2024).Inclusión educativa: Desafíos y oportunidades para la educación de estudiantes con necesidades especiales. *Revista Científica Zambos*, *3*(3), 44-63. https://doi.org/10.69484/rcz/v3/n3/57

Rayner, S. M. (2017). Admissions policies and risks to equity and educational inclusion in the context of school reform in England. *Management in Education*, *31*(1), 27-32. https://doi.org/10.1177/0892020616687699

Reeves, P., Ng, S. L., Harris, M., & Phelan, S. K. (2022). The exclusionary effects of inclusion today:(re) production of disability in inclusive education settings. *Disability & Society*, *37*(4), 612-637. https://doi.org/10.1080/09687599.2020.1828042

Rehman, A. A., & Alharthi, K. (2016). An introduction to research paradigms. *International journal of educational investigations*, *3*(8), 51-59.

Reta Kumsa and Alemayehu Teklemariam (2024). Lived Experiences of Primary School Teachers in Implementing Inclusive Education at Primary Schools of Sebeta Town, Oromia. *Eastern Africa Social Science Research Review*, *40*(1), 25-48. https://doi.org/10.1353/eas.2024.a981243

Rhodes, D., Antoine, E., & Abidin, A. (2025). Cultural understandings of inclusion in Southeast Asia. *International Journal of Developmental Disabilities*, *71*(6), 796-806. https://doi.org/10.1080/20473869.2025.2521676

Roberts, C. A., Snodgrass, M. R., Love, H. R., Badgett, N. M., Gilson, C. B., Yang, X., & Peterson,

J. (2024). Individuals with extensive support needs and mixed methods research: A systematic literature review across education subfields. *Research and Practice for Persons with Severe Disabilities*, *49*(4), 303-326. https://doi.org/10.1177/1540796924129147

Rodriguez, J. (2021). Moving towards inclusive education for all: Examining stakeholder perceptions of educating students with special needs in schools operated by the Jordan Field of the UNRWA. *International Journal of Disability, Development and Education*, *68*(2), 240-258. https://doi.org/10.1080/1034912x.2019.1671580

Romm, N. R. (2015). Reviewing the transformative paradigm: A critical systemic and relational (Indigenous) lens. *Systemic Practice and Action Research*, *28*(5), 411-427. https://doi.org/10.1007/s11213-015-9344-5

Root, J. R., & Lindström, E. (2024). Embracing mixed methods research in special education. *Research and Practice for Persons with Severe Disabilities*, *49*(4), 231-241. https://doi.org/10.1177/15407969241293420

Rossano, M. J. (2012). The essential role of ritual in the transmission and reinforcement of social norms. *Psychological bulletin*, *138*(3), 529. http://dx.doi.org/10.1037/a0027038

Sabatello, M. (2013). Children with disabilities: A critical appraisal. *The International Journal of Children's Rights*, *21*(3), 464-487.

Safaqi, A. R., & Kusuma, Y. (2025). Strengthening Students' Character through Islamic Education Practices: A Sustainable Model of Values-Based School Culture in Indonesia. *Journal of Character and Sustainability*, *1*(1), 32-42. http://dx.doi.org/10.64780/jcas.v1i1.139

Sailor, W. (2017). Equity as a basis for inclusive educational systems change. *Australasian Journal of Special Education*, *41*(1), 1-17. https://doi.org/10.1017/jse.2016.12

Sailor, W., & Roger, B. (2005). Rethinking inclusion: Schoolwide applications. *Phi Delta Kappan*, *86*(7), 503-509. https://doi.org/10.1177/003172170508600707

Sakiz, H., & Woods, C. (2014). From thinking to practice: school staff views on disability inclusion in Turkey. *European Journal of Special Needs Education*, *29*(2), 135-152. https://doi.org/10.1080/08856257.2014.882058

Salazar-Alcivar, A. N., Alcivar-Córdova, D. M., Montaño-Villa, J. J., Salazar-Alcivar, L. E., & Yaulema-Torres, G. M. (2025). Rol del liderazgo educativo en la implementación de políticas inclusivas en instituciones escolares. *Revista Científica Ciencia Y Método*, *3*(1), 57-71. https://doi.org/10.55813/gaea/rcym/v3/n1/36

Sanahuja, J. M., Olmos, P., & Miquel, E. (2017). An evaluation of the process of inclusion through the index for inclusion. *Sylwan Journal*, *161*(10), 2-22. https://doi.org/59879/yVWLq

Sánchez, P. A., de Haro-Rodríguez, R., & Martínez, R. M. (2019). Barriers to inclusion in schools: A study using the Index for Inclusion in Spain. *Revista Electrónica Interuniversitaria de Formación del Profesorado, 22*(2), 19–32. https://doi.org/10.6018/reifop.22.2.369611

Sandfort, J. R., & Moulton, S. (2020). Replication or innovation? Structuration in policy implementation. *Perspectives on Public Management and Governance*, *3*(2), 141-154. https://doi.org/10.1093/PPMGOV/GVZ029

Sandoval, M., Muñoz, Y., & Márquez, C. (2021). Supporting schools in their journey to inclusive education: Review of guides and tools. *Support for Learning*, *36*(1), 20-42. 10. https://doi.org/1111/1467-9604.12337

Sausman, C., Oborn, E., & Barrett, M. (2016). Policy translation through localization: implementing national policy in the UK. *Policy & Politics*, *44*(4), 563-589. http://dx.doi.org/10.1332/030557315X14298807527143

Schein, E. H., & Schein, P. A. (2017). *Organizational culture and leadership* (5th ed.). Wiley.

Schiemer, M. (2017). *Education for children with disabilities in Addis Ababa, Ethiopia: Developing a sense of belonging*. Springer Nature.

Schuelka, M. J. (2018). Implementing inclusive education. *K4D helpdesk report. Brighton, UK: Institute of development studies*.

Schumacker, R. E., & Lomax, R. G. (2016). *A beginner's guide to structural equation modeling* (4th ed.). Routledge.

Scorgie, K. (2015). Ambiguous belonging and the challenge of inclusion: Parent perspectives on school membership. *Emotional and Behavioural Difficulties*, *20*(1), 35-50. https://doi.org/10.1080/13632752.2014.947098

Sepadi, M & Moshia, M. (2025). Interrogating the Disconnect: A Limpopo Province Case Study of Mainstream Educators' Engagement with Inclusive Education Policies. *Journal of Curriculum and Teaching*, *14*(3), 149-162. https://doi.org/10.5430/jct.v14n3p149

Serriere, F., & Daniela, L. (2025). A systematic review of K-12 teachers' adaptive expertise developmen. *Bordón: Revista de pedagogía*, *77*(3), 77-107. http://dx.doi.org/10.13042/Bordon.2025.110952

SH, U. A., & Supriyono, N. M. R. P. (2024). The role of teacher training and policy in advancing inclusive education. *Sinergi International Journal of Education*, *2*(1), 57-66. https://doi.org/10.61194/education.v2i1.571

Shah, S. R., & Al-Bargi, A. (2013). Research Paradigms: Researcher's Worldviews, Theoretical Frameworks, and Study Designs. Arab World English Journal, 4, 252-264.

Shah, S. S., Shah, A. A., & Khaskhelly, N. (2018). Pragmatism research paradigm: a philosophical framework of advocating methodological pluralism in social science research. *Journal of Grassroots*, *52*(1).

Shakespeare, T. (2006). *Disability Rights and Wrongs.* Routledge. https://doi.org/10.4324/9780203640098

Shakespeare, T. (2013). Disability Rights and Wrongs Revisited (2nd ed.). Routledge. https://doi.org/10.4324/9781315887456

Shakespeare, T., Watson, N., &Alghaib, A. O. (2016). Blaming the victim, all over again: Waddell and Aylward's biopsychosocial (BPS) model of disability. *Critical Social Policy, 36*(4), 1–20. https://doi.org/10.1177/0261018316649120 csp.sagepub.com.

Shannon-Baker, P. (2016). Making paradigms meaningful in mixed methods research. *Journal of mixed methods research*, *10*(4), 319-334. https://doi.org/10.1177/1558689815575861

Sharma, B. U. (2024). Impact of Universal Design for Learning (UDL) on Student Engagement and Achievement in Inclusive Education. *International Journal of Novel Research and Development (IJNRD)*, *9*(8), 173-176.

Sharma, U., & Salend, S. J. (2016). Teaching assistants in inclusive classrooms: A systematic analysis of the international research. *Australian Journal of Teacher Education (Online)*, *41*(8), 118-134. Retrieved from http://ro.ecu.edu.au/ajte/vol41/iss8/7

Shaw, A. (2024). Inclusion of disabled Higher Education students: why are we not there yet?. *International Journal of Inclusive Education*, *28*(6), 820-838. https://doi.org/10.1080/13603116.2021.1968514

Shenton, A. K. (2004). Strategies for ensuring trustworthiness in qualitative research projects. *Education for information*, *22*(2), 63-75. https://doi.org/10.3233/EFI-2004-22201

Shomari, C., Everaert, L., Shayo, D. P., Mtwangi-Limbumba, T., Babere, N., & Emmers, E. (2025). Examining community perceptions on inclusive education and its influence on

students with disabilities: a systematic review. *International Journal of Inclusive Education*, 1-17. https://doi.org/10.1080/13603116.2025.2598679

Shrestha, B. K., & Sharma, L. R. (2024). Discerning the distinctive characteristics of key research paradigms and their constituents. *Nepal Journal of Multidisciplinary Research, 7*(2), 30-44. https://doi.org/10.3126/njmr.v7i2.68191

Shuakbayeva, Z., Ospanova, B., Kalkeyeva, K., Orazaliyeva, R., & Nurekenova, A. (2025, October). Replicating the pathways to resilience: demographic predictors, self-efficacy, and inclusive teaching among pre-service teachers. In *Frontiers in Education* (Vol. 10, p. 1640288). Frontiers Media SA. https://doi.org/10.3389/feduc.2025.1640288

Sijtsma, K. (2009). On the use, the misuse, and the very limited usefulness of Cronbach's alpha. *Psychometrika, 74*(1), 107–120.

Simón, C., Muñoz-Martínez, Y., & Porter, G. L. (2021). Classroom instruction and practices that reach all learners. *Cambridge Journal of Education, 51*(5), 607-625. https://doi.org/10.1080/0305764X.2021.1891205

Singal, N. (2016). Education of children with disabilities in India and Pakistan: Critical analysis of developments in the last 15 years. *Prospects, 46*(1), 171-183. https://doi.org/10.1007/s11125-016-9383-4

Singh, A., & Pallai, P. (2023). Paving the way ahead: A systematic literature analysis of inclusive teaching practices in inclusive classrooms. *Journal of Educational, Cultural and Psychological Studies*, 27, 157–171. https://doi.org/10.7358/ecps-2023-027-sipa

Singh, R., Jain, V. K., & Yadav, S. (2025). Attitude of secondary school teachers towards inclusive education. *International Journal of Research-GRANTHAALAYAH, 13*(3), 257-263. https://doi.org/10.29121/granthaalayah.v13.i3.2025 .6037

Singh, S. (2024). Inclusive Education: Promoting Equity and Access for Students with Disabilities. *Global International Research Thoughts, 12*(1), 30–35. https://doi.org/10.36676/girt.v12.i1.109

Šiška, J., Bekele, Y., Beadle-Brown, J., & Záhořík, J. (2020). Role of resource centres in facilitating inclusive education: experience from Ethiopia. *Disability & Society, 35*(5), 811-830. https://doi.org/10.1080/09687599.2019.1649120

Slee, R. (2011). *The irregular school: Exclusion, schooling and inclusive education*. Routledge.

Slee, R. (2014). Discourses of inclusion and exclusion: Drawing wider margins. *Power and education*, *6*(1), 7-17. https://doi.org/10.2304/power.2014.6.1.7

Slee, R. (2018). *Inclusion and education: Defining the scope of inclusive education*. UNESCO Global Education Monitoring Report.

Slee, R. (2019). Belonging in an age of exclusion. *International Journal of Inclusive Education*, *23*(9), 909-922. https://doi.org/10.1080/13603116.2019.1602366

Smyth, F., Shevlin, M., Buchner, T., Biewer, G., Flynn, P., Latimier, C., ... & Ferreira, M. A. (2014). Inclusive education in progress: policy evolution in four European countries. *European Journal of Special Needs Education*, *29*(4), 433-445. https://doi.org/10.1080/08856257.2014.922797

Sokal, L., & Sharma, U. (2017). Do I really need a course to learn to teach students with disabilities? I've been doing it for years. *Canadian Journal of Education/Revue canadienne de l'éducation*, *40*(4), 739-760. https://www.jstor.org/stable/10.2307/90018386?seq=1&cid=pdf

Solomon Melesse (2020). Primary School Teachers' Knowledge, Attitude and Practice of Differentiated Instruction: The Case of In-Service Teacher-Trainees of Debre Markos College of Teacher Education, West Gojjam Zone, Amhara Region, Ethiopia. *International Journal of Curriculum and Instruction*, *12*(1), 98-114.

Sorensen, N. (2022). *The improvising teacher: reconceptualising pedagogy, expertise and professionalism*. Routledge. https://doi.org/10.4324/9781003223207

Stelitano, L., Russell, J. L., & Bray, L. E. (2020). Organizing for meaningful inclusion: Exploring the routines that shape student supports in secondary schools. *American Educational Research Journal*, *57*(2), 535-575. https://doi.org/10.3102/0002831219859307

Stolp, S., & Smith, S. C. (1995). *Transforming school culture: Stories, symbols, values, and the leader's role*. ERIC Clearinghouse on Educational Management.

Strogilos, V., & Avramidis, E. (2017). The cultural understanding of inclusion in diverse settings: Support services and collaboration. *The Wiley handbook of diversity in special education*, 87-113. https://doi.org/10.1002/9781118768778.ch5

Stroud, R. (2024). "We need structures in place": Educators' experiences with special education at international schools. *Exceptionality Education International*, *34*(1), 112-130.

Stubbs, S. (2008). Inclusive education. *Where there are few resources. Oslo, The Atlas Alliance Publ*.

Stubbs, S. (2008). *Inclusive education: Where there are few resources*. The Atlas Alliance.

Stylianou, A. (2017). *Mothers with disabled children in Cyprus: Experiences and support* [Doctoral dissertation]. University College London.

Sutter, C., Bhatt, B., & Qureshi, I. (2023). What makes resource provision an effective means of poverty alleviation? A resourcing perspective. *Organization Science*, *34*(1), 223-245. https://doi.org/10.1287/orsc.2021.1570

Swiss, L. (2009). Decoupling values from action: an event-history analysis of the election of women to parliament in the developing world, 1945—90. *International Journal of Comparative Sociology*, *50*(1), 69-95. https://doi.org/10.1177/0020715208100981

Tabachnick, B. G., & Fidell, L. S. (2019). Using Multivariate Statistics (7th ed.). Pearson Education.

Tadesse Abera & Dawit Negassa (2019). The Inclusive education for deaf children in primary, secondary and preparatory schools in Gondar, Ethiopia. *Humaniora*, *31*(2), 177. https://doi.org/10.22146/jh.v31i2.44767

Tadesse Melesse (2015). Differentiated instruction: Perceptions, practices and challenges of primary school teachers. *Science, Technology and Arts Research Journal*, *4*(3), 253-264. http://dx.doi.org/10.4314/star.v4i3.37

Tamirat Gibon & Xiaoduan Chen (2023). Conceptualizing inclusive education: the role of teacher training and teacher's attitudes towards inclusion of children with disabilities in Ethiopia. *International Journal of Inclusive Education*, *27*(9), 1042-1055. https://doi.org/10.1080/13603116.2021.1879958

Tampubolon, M., Paramansyah, A., Rachmawati, B., & Salsabila, A. (2023). Inclusive education practices: Fostering diversity and equity in the classroom. *Global International Journal of Innovative Research, 1*(3), 260–266. https://doi.org/10.59613/global.v1i3.46

Tan, Q. (2014). *Examining the barriers to inclusive education for students with special educational needs: A case study of two primary schools in mainland China* [Doctoral dissertation]. Universitat Autònoma de Barcelona.

Taqiyah, D. B., Hermanto, H., Ishartiwi, I., & Pujaningsih, P. (2025). Multidisciplinary collaborative model for identification and assessment services for students with special

needs in inclusive schools. *Cakrawala Pendidikan: Jurnal Ilmiah Pendidikan, 44*(2), 378-387. https://doi.org/10.21831/cp.v44i2.81083

Tavakol, M., & Dennick, R. (2011). Making sense of Cronbach's alpha. *International Journal of Medical Education, 2*, 53–55.

Tebeje Molla & Andrea Nolan (2020) Teacher agency and professional practice, Teachers and Teaching, 26:1, 67-87. https://doi.org/10.1080/13540602.2020.1740196

Teddlie, C., & Tashakkori, A. (2009). *Foundations of mixed methods research: Integrating quantitative and qualitative approaches in the social and behavioral sciences*. Sage.

Tefera, B., Schippers, A., van Engen, M. L., & van der Klink, J. J. L. (2018). The experiences of children with disabilities and primary caregivers on the social inclusion of children with disabilities in Ethiopia. *International Journal of Child, Youth and Family Studies*, *9*(4), 146-167. https://doi.org/10.18357/IJCYFS94201818645

Teketel Agafari (2018). "Inclusive Education as an Approach to Reduce Inequitable Access to Education: Exploring the Practices of Jegnoch Metasebiya Primary School in Harar Town." *Ethiopia. Journal of Teacher Education and Educators* 7 (2): 123–138.

Tekle Mereba and Geberew Tulu. (2022). Early reading difficulties among Qillisoo primary school children in Ethiopia: reflections from teachers, children, and parents. https://doi.org/10.5539/mas.v16n3p41

Terrell, S. R. (2012). Mixed-methods research methodologies. *Qualitative report, 17*(1), 254-280.

Tesaka Mebratu, Alemayehu Teklemariam, & Tilahun Achaw (2024). Policy Intentions on Inclusive Education for Students with Disabilities in Ethiopia: A Qualitative Study. *Indonesian Journal of Education and Social Studies*, *3*(2), 86-101. https://doi.org/10.33650/ijess.v3i2.9948

Tesaka Mebratu, Alemayehu Teklemariam, & Tilahun Achaw (2025). Teachers' Perceptions on Fostering Inclusive School Culture for Students with Disabilities. *International Journal of Global Community, 8(1), 89-114.* https://doi.org/10.33473/ijgc-ri.v8i1.257

Tesfaye Basha (2020). Practices, challenges and opportunities of inclusive education implementation in Kambata Tambaro Zone, Ethiopia. *Open access library journal*, *7*(2), 1-23. https://doi.org/10.4236/oalib.1105989

Thébaud, S., Hoppen, C., David, J., & Boris, E. (2024). Understanding gender disparities in caregiving, stress, and perceptions of institutional support among faculty during the

COVID-19 pandemic. *Social Sciences*, *13*(4), 181. https://doi.org/10.3390/socsci13040181

Thompson, L. S. C. A. (2016). Moving beyond the limits of disability inclusion: using the concept of belonging through friendship to improve the outcome of the social model of disability. *International Journal of Social, Behavioral, Educational, Economic, Business and Industrial Engineering, 10*(5), 1432-1435.

Thomson, A., Bridges, S., Corrins, B., Pham, J., White, C., & Buchanan, A. (2020). The impact of physical activity and sport programs on community participation for people with intellectual disability: A systematic review. *Journal of Intellectual & Developmental Disability*, *46*(3), 261-271. https://doi.org/10.3109/13668250.2020.1717070

Tirussew Tefera (2005) Disability in Ethiopia: Issues, Insights, and Implications. Addis Ababa University, Addis Ababa. https://doi.org/10.12980/jclm.5.2017j7-151

Tolcha Eshete, Tesfaye Shibiru, & Desalegn Beyene (2025). Woreda's Education Office Leaders Perceptions in Implementation of the New Education and Training Policy of Ethiopia (2023): Evidences from Fiche, Woliso and Saja. *International Journal of Science and Qualitative Analysis, 11(1),* 15-25. https://doi.org/10.11648/j.ijsqa.20251101.13

Tonegawa, Y. (2019). Policy and practice of "inclusive education" in Addis Ababa, Ethiopia: An analysis from the perspectives of teachers and parents of children with disabilities. *Nilo-Ethiopian Studies*, *2019*(24), 31-45

Tournier, B., Chimier, C., & Klein, E. (2025). Improving the quality of teaching at scale: middle-tier instructional leaders as change agents. *ECNU Review of Education*, *8*(4), 1159-1179.

Travis, M. A. (2015). Disabling the gender pay gap: Lessons from the social model of disability. *Denver Law Journal, 91*(4), 893-923.

Tristani, L., & Bassett-Gunter, R. (2020). Making the grade: Teacher training for inclusive education: A systematic review. *Journal of Research in Special Educational Needs*, *20*(3), 246-264.

Triviño-Amigo, N., Barrios-Fernandez, S., Mañanas-Iglesias, C., Carlos-Vivas, J., Mendoza-Muñoz, M., Adsuar, J. C., ... & Rojo-Ramos, J. (2022). Spanish teachers' perceptions of their preparation for inclusive education: the relationship between age and years of teaching experience. *International journal of environmental research and public health*, *19*(9), 5750. https://doi.org/10.3390/ijerph19095750

Tsigie Genet. (2022). The perception of readiness for implementing inclusive education among primary school subject teachers: Implications for teacher education in Ethiopia. *International Journal of Special Education*, *37*(2), 82-91. https://doi.org/10.52291/ijse.2022.37.42

Tucker, O. G. (2023). Band teacher agency in a high-stakes performance environment. *Journal of Research in Music Education*, *70*(4), 385-406. https://doi.org/10.1177/00224294221088856

Tuerah, P. R. (2025). Teacher Professional Development in Implementing Inclusive Education Practices. *Naluri Edukasi Jurnal Pendidikan*, *2*(3), 117-130. https://doi.org/10.64924/cs3h9b14

Tumkaya, G. S., & Miller, S. (2020). The preceptions of pre and in-service teachers' self-efficacy regarding inlcusive practices: A systematised review. *Elementary Education Online*, *19*(2), 1061-1077. https://doi.org/10.17051/ilkonline.2020.696690

UNESCO (2015). SDG4-Education 2030, Incheon Declaration (ID) and Framework for Action. For the Implementation of Sustainable Development Goal 4, Ensure Inclusive and Equitable Quality Education and Promote Lifelong Learning Opportunities for All. UNESCO.

UNESCO. (1994). *T*he Salamanca Statement and Framework for action on special needs education*: adopted by the World Conference on Special Needs Education; Access and Quality. Salamanca, Spain, 7-10 June 1994*. UNESCO.

UNESCO. (2005). *Guidelines for inclusion: Ensuring access to education for all*. UNESCO.

UNESCO. (2008). Education for all global monitoring report 2009*: Overcoming inequality: Why governance matters*. UNESCO.

UNESCO. (2009). *Policy guidelines on inclusion in education*. UNESCO.

UNESCO. (2017). A guide for ensuring inclusion and equity in education. UNESCO.

UNESCO. (2018). Education for Sustainable Development Goals Learning Objectives. https://unesdoc.unesco.org/ark:/48223/pf0000247444

UNICEF. (2014). Global initiative on out-of-school children: South Asia regional study.

UNICEF. (2017). *Inclusive education: Understanding Article 24 of the Convention on the Rights of Persons with Disabilities*. UNICEF. https://www.unicef.org

United Nations Department of Economic and Social Affairs (UN DESA). (n.d.). *Article 24: Education*. https://www.un.org/development/desa/disabilities/convention-on-the-rights-of-persons-with-disabilities/article-24-education.html

United Nations Human Rights Council. (2017). *Annual report of the United Nations High Commissioner for Human Rights* (A/HRC/34/3). https://www.refworld.org/reference/annualreport/unhrc/2017/115587

United Nations. (2006). Convention on the Rights of Persons with Disabilities and Optional Protocol. https://www.un.org/disabilities/documents/convention/convoptprot-e.pdf

Van Wijk, J., van Wijk, J., Drost, S., & Stam, W. (2020). Challenges in building robust interventions in contexts of poverty: Insights from an NGO-driven multi-stakeholder network in Ethiopia. *Organization Studies*, *41*(10), 1391-1415. https://doi.org/10.1177/0170840619878468

Väyrynen, S., & Paksuniemi, M. (2020). Translating inclusive values into pedagogical actions. *International Journal of Inclusive Education*, *24*(2), 147-161. https://doi.org/10.1080/13603116.2018.1452989

Velliaris, D. M. (2010). International parents in Tokyo and the education of their transnational children. *Journal of Research in International Education*, *9*(3), 336-337. https://doi.org/10.1177/1475240910009003100 2

Viswanathan, M. (2005). *Measurement error and research design*. Sage Publications. https://doi.org/10.4135/9781412984935

Vlachou, A. (2004). Education and inclusive policy-making: Implications for research and practice. *International Journal of Inclusive Education*, *8*(1), 3-21. https://doi.org/10.1080/1360311032000139449

Voegtle, K. H., Spaulding, D. T., & Lodico, M. G. (2006). Methods in educational research. *US: HB Printing*.

Vyas, K., & Bano, S. (2015). Education for children with special needs: Journey from segregation to inclusion. *Archives of Mental Health*, *16*(1), 15-21.

Wade, D. T., & Halligan, P. W. (2017). The biopsychosocial model of illness: a model whose time has come. *Clinical rehabilitation*, *31*(8), 995-1004. https://doi.org/10.1177/026921551770989

Waitoller, F. R., & Artiles, A. J. (2013). A decade of professional development research for inclusive education. *Review of Educational Research*, *83*(3), 319–356. https://doi.org/10.3102/0034654313483905

Waltz, C. F., Strickland, O. L., & Lenz, E. R. (2005). *Measurement in nursing and health research* (3rd ed.). Springer.

Wang, W. (2026). Socio-Pedagogical Support for Students with Special Educational Needs in Inclusive Mainstream Schools: A Systematic Review. *Psychology Research and Behavior Management*, 1-17. https://doi.org/10.2147/PRBM.S577631

Warin, J., & Gannerud, E. (2014). Gender, teaching and care: A comparative global conversation. *Gender and Education*, *26*(3), 193-199. https://doi.org/10.1080/09540253.2014.928023

Wehmeyer, M. L., Shogren, K. A., & Kurth, J. (2021). The state of inclusion with students with intellectual and developmental disabilities in the United States. *Journal of Policy and Practice in Intellectual Disabilities*, *18*(1), 36-43. https://doi.org/10.1111/jppi.12332

Weiss, S., Muckenthaler, M., Heimlich, U., Kuechler, A., & Kiel, E. (2021). Teaching in inclusive schools. Do the demands of inclusive schools cause stress?. *International Journal of Inclusive Education*, *25*(5), 588-604. https://doi.org/10.1080/13603116.2018.1563834

White, R., Lowery, C., & Johnson, J. (2025). Enhancing high-quality education through systemic school leadership: a systematic review. *Quality Education for All*, *2*(1), 227-244. https://doi.org/10.1108/QEA-09-2024-0096

WHO. (2001). International classification of functioning, disability and health (ICF). World Health Organization. https://www.who.int/standards/classifications/international-classification-of-functioning-disability-and-health

Wilcox, R. R. (2012). Introduction to robust estimation and hypothesis testing. 3rd Edition, Academic Press. https://doi.org/10.2307/2669876

Willie, M. M. (2024). Population and target population in research methodology. *Golden Ratio of Social Science and Education*, *4*(1), 75-79. https://doi.org/10.52970/grsse.v4i1.405

Wipulanusat, W., Panuwatwanich, K., Stewart, R. A., & Sunkpho, J. (2020). Applying mixed methods sequential explanatory design to innovation management. In *The 10th International Conference on Engineering, Project, and Production Management* (pp. 485-495). Springer Singapore.

Wondwosen Mitiku, Yitayal Alemu, & Semahegn Mengsitu. (2014). Challenges and opportunities to implement inclusive education. *Asian Journal of Humanity, art and literature*, *1*(2), 118-135. https://doi.org/10.15590/AJHAL/2014/V1I2/54051

Woodcock, S., & Anderson, J. (2025). Conceptions to classrooms: The influence of teacher knowledge on inclusive classroom practice. *International Journal of Educational Research Open*, *8*, 100412. https://doi.org/10.1016/j.ijedro.2024.100412

World Bank. (2013). *Ethiopia General Education Quality Improvement Project II (P129828): Implementation Status & Results Report*. 1–12.

World Bank. (2022). *Ethiopia General Education Quality Improvement Program for Equity (P163050): Implementation Status and Results Report*. 1–14.

World Health Organization. (2011). *World report on disability*. WHO.

Woyessa, A. H., Tharmalingadevar, T. P., Upashe, S. P., & Diriba, D. C. (2019). Primary school teachers' misconceptions about attention deficit/hyperactivity disorder in Nekemte town, Oromia region, Western Ethiopia. *BMC Research Notes*, *12*(1), 524. https://doi.org/10.1186/s13104-019-4573-9

Xiao Qu (2022). A critical realist model of inclusive education for children with special educational needs and/or disabilities. *International Journal of Inclusive Education*, 26:10, 1008-1022, https://doi.org/10.1080/13603116.2020.1760366

Yamane, T. (1973). *Statistics: An introductory analysis* _____ (2nd edition). Harper & Row; John Weatherhill.

Yoo, J., & Bal, A. (2025). Unpacking Systemic Contradictions in Inclusive Education through a Cultural-Historical Activity Theoretical Analysis. *Exceptional Children*. https://doi.org/10.1177/00144029251399962

Yorke, L., Hailu, B.H., Rose, P. and Tefera, T. (2022). The Pathway to Inclusive Education in Ethiopia: Perspectives of System- And School-Level Stakeholders. RISE Working Paper Series. 22/115. https://doi.org/10.35489/BSG-RISEWP_2022/115

Yvonne Feilzer, M. (2010). Doing mixed methods research pragmatically: Implications for the rediscovery of pragmatism as a research paradigm. *Journal of mixed methods research*, *4*(1), 6-16. https://doi.org/110.1177/1558689809349691

Zabeli, N., & Gjelaj, M. (2020). Creating inclusive cultures, policies, and practices: the Kosovo case. *The International Journal of Diversity in Education*, *20*(1), 49. https://doi.org/10.18848/2327-0020/CGP/v20i01/49-62

Zagona, A. L., Kurth, J. A., & MacFarland, S. Z. (2017). Teachers' views of their preparation for inclusive education and collaboration. *Teacher Education and Special Education*, *40*(3), 163-178. https://doi.org/10.1177/0888406417692969

Zelalem Temesgen (2018). Exploring governmental commitment to execute inclusive education in Ethiopia. *Research in Pedagogy*, *8*(2), 226-239. https://doi.org/10.17810/2015.86

Zelalem Temesgen. (2014). The journey of special needs education in Ethiopia: An overview. *Journal of Education and Practice*, *5*(27), 83-85.

Zhan, X., Lo, C. W. H., & Tang, S. Y. (2014). Contextual changes and environmental policy implementation: a longitudinal study of street-level bureaucrats in Guangzhou, China. *Journal of Public Administration Research and Theory*, *24*(4), 1005-1035. https://doi.org/10.1093/jopart/mut004

Zohri, A., & Bogotch, I. (2023). Illusions of equity: Fulfilled and unfulfilled needs of students with disabilities in higher education. *International Journal of Leadership in Education*, 1-19. https://doi.org/10.1080/13603124.2023.2261417

APPENDICES

Appendix A: Data Collection Tools-English Version

Addis Ababa University

College of Education and Language Studies

Department of Special Needs Education

Tool 1: Survey Questionnaire for Primary School Teachers

Dear Teacher,

The objective of this questionnaire is to gather information about Teachers' perceptions regarding the inclusiveness of culture, policy, and practices for students with disabilities (SWDs) in primary schools. It has three parts. Your responses are crucial for guiding and completing this study. Please respond to each item thoughtfully and thoroughly, drawing upon your professional experiences and observations. Your participation is essential to achieving the goals of this study. There are no right or wrong answers, and no one will judge you based on your responses. All information provided will be kept confidential and used solely for this study. Your accurate and honest input will significantly contribute to the success of this study.

Thank you for your time and cooperation.

Part I: Background Information

Direction: Please tick (√) the box near the answer you believe best represents your response

1. Please indicate your gender**:** □ Male □ Female
2. Please indicate your **age** category**:**
   - □ Under 30 years
   - □ 31 - 40 years
   - □ 41 to 50 years
   - □ 51 or more years
3. Your educational qualification level is**:** □ Diploma □ Degree
4. Please indicate your total teaching profession work experience category**:**
   - □ 1- 5 years
   - □ 6 - 10 years
   - □ 11 - 15 years
   - □ 16 or more years
5. Please indicate your work experience in teaching students with disabilities**:**
   - □ Never
   - □ Up to 5 years
   - □ 6 - 10 years
   - □ 11 or more years
6. Based on your students' current level of functioning and any professional reports available, how would you describe the overall severity of disabilities among students you teach?
   - ☐ **Unable to assess:** I do not have enough information or professional reports to assess disability severity in my class.
   - ☐ **Mild**: Students have some learning or behavioral difficulties but can learn and take part in class with little or no extra help.
   - ☐ **Moderate**: Students need regular support or changes in lessons or materials to take part and learn effectively.
   - ☐ **Severe/profound**: Students need strong, ongoing support and major changes in lessons or materials to take part in school activities.

Part II: School inclusivity of culture, policy, and practices for SWDs

This section asks you to indicate your level of agreement with statements about your school's inclusivity in culture, policies, and practices for SWDs. Please read each statement carefully and mark (√) the number that best represents your agreement using the scale provided. Rating Scale: **1** =

Strongly Disagree, **2** = Disagree, **3** = Undecided, **4** = Agree, & **5** = Strongly Agree. There are no "right" or "wrong" answers. Your honest and thoughtful responses are greatly appreciated.

No.	**To what extent do you agree or disagree with the following statement…?**	Rating Scale				
	Inclusive School Culture: Building a sense of Community for SWDs	**1**	**2**	**3**	**4**	**5**
1	SWDs are warmly welcomed and treated as valued members of the school community.					
2	Teachers and staff collaborate regularly to support the participation and learning of SWDs.					
3	SWDs are often excluded from meaningful participation in classroom and school activities.					
4	Mutual respect and understanding are evident among staff and students, including SWDs.					
5	Teachers and parents of SWDs communicate regularly about students' progress and support needs.					
6	School leaders promote and model inclusive values that guide staff in supporting SWDs.					
7	SWDs are encouraged to express their opinions and participate in decision-making.					
8	SWDs rarely develop a genuine sense of belonging in school life.					
9	Our school maintains trust-based partnerships with families of SWDs to promote inclusion.					
	Inclusive School Culture: Establishing Inclusive Values for SWDs	**1**	**2**	**3**	**4**	**5**
10	Our school promotes and upholds inclusive values that respect the rights of all students, including SWDs.					
11	Respect for the rights and dignity of every student, including SWDs, is evident in daily school life.					
12	Inclusion is viewed as a way to enhance the participation and achievement of all students.					
13	SWDs are valued equally as active members of the school community.					
14	The school community fails to ensure fairness and equal treatment for SWDs compared to their peers.					
15	Our school maintains a discrimination-free environment for all students.					
16	Our school actively promotes positive and respectful interactions between students with and without disabilities.					
17	The school environment does not adequately support SWDs in feeling confident in their abilities.					
18	Teachers and school leaders hold high expectations for the achievement of all students, including SWDs.					
	Inclusive school policy: Policy Awareness and Implementation	**1**	**2**	**3**	**4**	**5**
19	National education policies prioritize the inclusion of SWDs in regular schools.					
20	I am familiar with the key national and local policy frameworks that support inclusive education for SWDs.					
21	I collaborate with school leaders to translate inclusive education strategies into actionable school-level practices.					

22	Our school's guiding documents (e.g., vision, mission, plans) reflect a clear commitment to inclusion.					
23	The school's rules and routines do not adequately support the inclusion of SWDs in regular classroom activities.					
24	Our school ensures equitable admission opportunities for all students, including those with disabilities.					
25	Our school follows appropriate procedures for identifying and assessing students with disabilities as mandated by legal frameworks.					
26	Our school lacks sufficient accessible materials and assistive technologies to meet the diverse needs of SWDs.					
27	Our school's infrastructure and facilities (classrooms, restrooms, & playgrounds) are physically accessible for SWDs, in line with policy standards.					
	Inclusive school policy: Organizing Support for the Inclusion of SWDs	1	2	3	4	5
28	Our school has a clear and coordinated system for organizing support services for SWDs.					
29	Our school has a designated inclusion team responsible for planning and monitoring inclusive programs.					
30	Individualized Education Plans (IEPs) are developed and implemented for SWD.					
31	Teachers and staff receive inadequate training on strategies for supporting SWDs.					
32	Our school prioritizes resource allocation for initiatives that promote inclusion.					
33	The school facilitates collaboration among teachers, SNE experts, and parents in supporting SWDs.					
34	Our school regularly reviews and improves its inclusive support services based on feedback and outcomes.					
35	The school tailors support services to address the specific needs of individual SWDs.					
	Inclusive School Practices: Teaching and Learning Practices for SWDs	1	2	3	4	5
36	I regularly review and adapt my lesson plans to meet the individual needs of all students, including SWDs					
37	I utilize flexible seating and group arrangements that promote the participation and interaction among all students, including SWDs.					
38	I collaborate with other teachers or specialists to plan and deliver lessons that effectively include SWDs.					
39	I rarely implement differentiated instructional strategies to accommodate the varying abilities of SWDs.					
40	I use clear, step-by-step instructions and provide additional explanations when SWDs face learning difficulties.					
41	I use varied assessment strategies (e.g., oral, written, project-based) to fairly evaluate the progress of SWDs.					
42	I provide multiple ways for students, including SWDs, to engage with content (e.g., visual, auditory, hands-on activities).					
43	I encourage peer tutoring and cooperative learning to help SWDs participate actively in class activities.					
44	SWDs do not receive appropriate accommodations during exams and classroom assessments.					

45	I provide constructive feedback and learning support that motivate SWDs to participate confidently in classroom activities.					
	Inclusive School Practices: Resource Provision practices for SWDs	1	2	3	4	5
46	I work collaboratively with the school administration to ensure that sufficient resources are available to meet the needs of SWDs.					
47	The instructional and assistive resources available in my school inadequately meet the needs of SWDs.					
48	I am able to access and use accessible learning materials in my classroom to support SWDs.					
49	I ensure that the equipment and furniture in my classroom or school are adapted to meet the needs of SWDs.					
50	I utilize materials and tools from the school resource center to support the learning needs of SWDs.					
51	I integrate available audiovisual materials and technology into my instruction to support the learning of SWDs.					
52	I work with staff to ensure that SWDs have access to alternative resources and support to engage with the curriculum effectively.					

Thank you in advance for your cooperation!

Addis Ababa University
College of Education and Language Studies
Department of Special Needs Education

Tool: Key Informant Interview (KII) Guide for Public Primary School IERC coordinator

Dear Respondent,

This KII guide aims to explore how inclusive education is coordinated and supported at the school level, with particular attention to school culture, policy implementation, and everyday practices. As an IERC coordinator/focal person, your perspectives are especially valuable for understanding how inclusion is organized and enacted in practice. Your participation is entirely voluntary. All information you provide will be treated as confidential and used solely for academic purposes. The interview will take approximately 30–45 minutes. Do you have any questions before we begin?

Part I: Respondent Profile

1. Gender: ☐ Male ☐ Female
2. Current role/title: _____
3. Highest educational qualification: ☐ Diploma ☐ BA/BEd/BSc ☐ MA/M.Ed
4. Years in IERC coordinator role: _____ years
5. Trained SNIE professional: ☐ Yes ☐ No If yes, specify: _____
6. Also currently teaching: ☐ Yes ☐ No If yes, grade(s)/subject(s): _____
7. Approximate number of SWDs enrolled: _____ (if known)
8. Disability categories currently enrolled (if known): ☐ Visual ☐ Hearing ☐ Physical ☐ ASD ☐ ID ☐ Multiple ☐

Part II: Interview Questions

1. From your perspective as the coordinator, how would you describe the current status of education for SWDs in this school? (Probes: strengths; major constraints; variation in participation and learning across disability types; inclusion in regular classes vs. special class placement.)
2. In practice, what does inclusive education mean in the daily routine of this school? (Probes: how staff understand it; what "successful inclusion" looks like here.)
3. How would you describe the prevailing attitudes and expectations of school leadership and staff toward SWDs? (Probes: examples observed; how leadership shapes expectations; how SWDs are included in school life.)
4. What does collaboration and community-building for inclusion look like in this school? (Probes: parent involvement; SWDs' voices; coordination with classroom teachers; one instance where collaboration worked well and one where it did not.)
5. Which policies or guidelines shape inclusive education work in this school, and how are they operationalized? (Probes: awareness of SNIE Strategy; reflection in school plans/rules; admission processes; assessment/exam accommodations.)

6. How is support for SWDs organized and coordinated within the school? (Probes: inclusion/SEN committee; referral pathways; role clarity; coordination with woreda/sub-city offices.)
7. What is the process for developing and using IEPs/ILPs or similar learning/support plans? (Probes: who participates; frequency of review; documentation; challenges in translating plans into classroom practice.)
8. How do you support teachers to adapt instruction and assessment for SWDs? (Probes: coaching, modelling, resource sharing; one successful adaptation and one challenging case.)
9. How are resources and assistive materials managed, accessed, and used? (Probes: borrowing/issue system; what is used regularly vs stored; restricted access; usability vs. mere presence.)
10. What are the most critical constraints in obtaining, maintaining, and effectively using inclusive education resources? (Probes: budget and procurement; supply chains; maintenance/repair; consumables (e.g., batteries); training on use; competing priorities.)
11. What professional development on inclusion is available for teachers, and what urgent training needs remain unmet? (Probes: disability-specific strategies; differentiated instruction; assistive technology.)
12. How is inclusive education monitored and reviewed within the school and by external supervisors? (Probes: what is documented/reported; supervision follow-up; accountability for addressing gaps.)
13. Based on your experience, how do policies translate or fail to translate into daily classroom practices? (Probes: a concrete example of a policy–practice gap and what drives it.)
14. If you could prioritize three actionable steps to improve inclusion for SWDs in this school within the next year, what would they be, and why?
15. Is there anything else important about inclusion in this school (culture, policy, or practice) that we have not discussed?

Thank you very much for your time and valuable insights!

I wish you all the best in your important work!

Addis Ababa University

College of Education and Behavioral Sciences

Department of Special Needs Education

Tool 3: Observation Checklist for Public Primary School

Purpose: This observation checklist is designed to assess the availability, adequacy, usability, and accessibility of inclusive education resources and the physical environment for SWDs in primary schools.

Target Groups: Students with: visual impairments, hearing impairments, physical impairments, autism spectrum disorder, and intellectual and developmental disabilities.

Data Collection Method: **Non-participant structured observation**

Observation Details

Observer: _____

School: _____

Date: _____

Observer Instructions:

1) How to conduct the observation

Use non-participant observation. Do not interrupt lessons or school routines.

Observe multiple locations where possible (gate, compound paths, at least one classroom, toilets, resource center, and if available, library/lab/playground).

Verify resources through direct sighting and, where necessary, brief confirmation with the resource teacher/focal person (record the source in the Remark column).

2) **How to complete Sections A–B (Not accessible / partially accessible / Accessible)**

Rate based on actual accessibility and usability for SWDs, not on plans or statements.

Response options (A-B):

1 = Not accessible: Major barriers observed; SWDs cannot use the space/resource safely or independently; no reasonable accommodation evident.

2 = Partially accessible: Some access exists, but barriers remain; use may require assistance, is inconsistent, or excludes certain groups of SWDs.

3 = Accessible: Generally usable and safe; key barriers addressed; reasonable accommodations are visible and functional.

Remark (mandatory for all items): Briefly describe observed conditions (e.g., ramp present but too steep; narrow door; broken handrail; assistive device present but unused).

3) How to complete Sections C–G (Available/Not Available/Not Applicable)

Tick Available only if the item is present and accessible for use (not merely stored somewhere without access).

Tick Not Available if the item is absent, broken, missing key parts (e.g., no batteries), or not accessible to students.

Tick N/A only if there are no students in that category enrolled *or* the item is genuinely not applicable to the school context.

4) What to record in the remark column (all sections)

Use short, factual notes focusing on adequacy and usability. Whenever possible, include:

Condition: new/working, old, damaged, incomplete, out of service

Quantity/coverage: how many units; adequate for number of SWDs or not

Location & access: where kept; whether students can access it during learning time

Actual use: observed in classroom/resource center use or only stored

Specific barriers/enablers: steps, narrow doors, poor lighting, noise, lack of trained staff, etc.

Evidence source (if not directly seen): confirmed by resource teacher / seen in store/ in use during lesson

5) **Handling partial availability**: If an item exists but is not functional or usable, mark it as:

Sections A–B: rate 1–2 depending on severity; explain in r*emark column*

Sections C–G: treat non-functional items as Not Available (apply consistently).

If the item is available but restricted (e.g., locked, only for display), tick Available and note restricted access in remark column.

6) Consistency and neutrality

Apply the same standards across all schools.

Write remarks in neutral language (e.g., ramp present but steep; no handrails) rather than evaluative language (e.g., poor design).

7) Observation duration

Minimum: 45–60 minutes per school (or longer if the school is large), covering both facilities and learning/support spaces.

Evidence basis: Ratings should be based primarily on direct observation. When direct observation is not possible (e.g., functionality of devices, availability of batteries), brief confirmation may be obtained from a responsible staff member, and the source of confirmation should be recorded in the Remark column.

Section A: Accessibility of the Physical School Environment

Response options: 1 = Not accessible | 2 = Partially accessible | 3 = Accessible

No	Items	1	2	3	Remark
A1	Main gates (width, surface, opening mechanism)	☐	☐	☐	
A2	Building entry/exit points (ramps, stairs, doors)	☐	☐	☐	
A3	Classrooms (entrance, lighting, acoustics, furniture dimensions)	☐	☐	☐	
A4	Walkways/roads within the school compound	☐	☐	☐	
A5	Water taps (height, operating mechanism)	☐	☐	☐	
A6	Toilets (access, handrails, space, privacy)	☐	☐	☐	
A7	Mid-day meal area and/or materials	☐	☐	☐	
A8	Playgrounds/sports fields	☐	☐	☐	
A9	Library and/or laboratory buildings/services	☐	☐	☐	
A10	Disability resource center (location and access)	☐	☐	☐	

Selection B: Accessibility of School Resource Center Services

Response options: 1 = Not accessible | 2 = Partially accessible | 3 = Accessible

No	Items	1	2	3	Remark
B1	Availability and usability of materials and tools	☐	☐	☐	
B2	Adaptability of learning materials for different disabilities	☐	☐	☐	
B3	Functionality and relevance of assistive technology	☐	☐	☐	
B4	Availability of trained staff to assist SWDs	☐	☐	☐	
B5	Mechanisms to seek and use feedback to improve accessibility	☐	☐	☐	

Section C: Resources for Students with Visual Impairments (SWVI)

Are there students with visual impairments enrolled in this school? ☐ Yes ☐ No. (If No, most items in this section should be marked N/A.) Response options: Available | Not Available | Not Applicable (N/A)

Note for N/A: Select only if there are no SWVIs enrolled, or the item is not relevant to the school's context.

No	Item	Available	Not Available	N/A	Remark
C1	Textbooks in Braille	☐	☐	☐	
C2	Reference books in Braille	☐	☐	☐	

C3	Braille paper	☐	☐	☐	
C4	Slate and stylus	☐	☐	☐	
C5	Audio recorders	☐	☐	☐	
C6	Audio-recorded learning materials	☐	☐	☐	
C7	Computer with screen reader (e.g., JAWS)	☐	☐	☐	
C8	Talking calculator	☐	☐	☐	
C9	White cane	☐	☐	☐	
C10	Magnifying glass / low-vision aids	☐	☐	☐	
C11	Large print materials	☐	☐	☐	
C12	Tactile learning materials	☐	☐	☐	
C13	Tactile maps	☐	☐	☐	
C14	Braille ruler	☐	☐	☐	
C15	Braille/talking watch	☐	☐	☐	
C16	Braille dictionary	☐	☐	☐	
C17	Abacus	☐	☐	☐	

Section D: Resources for Students with Hearing Impairments (SWHI)

Are there students with visual impairments enrolled in this school? ☐ Yes ☐ No. (If No, most items in this section should be marked N/A.)

Response options: Available | Not Available | Not Applicable (N/A)

Note for N/A: Select only if there are no SWHI enrolled, or the item is not relevant to the school's context.

No	Item	Available	Not Available	N/A	Remark
D1	Hearing aids (school-supported or individual use)	☐	☐	☐	
D2	Hearing aid batteries	☐	☐	☐	
D3	Assistive listening devices (FM/sound-field systems)	☐	☐	☐	
D4	Visual alert systems (bells/alarms)	☐	☐	☐	
D5	Sign language charts/posters	☐	☐	☐	
D6	Trained sign language interpreter	☐	☐	☐	
D7	Captioned educational videos	☐	☐	☐	
D8	Visual teaching aids (charts, diagrams)	☐	☐	☐	
D9	Classroom seating supporting lip-reading	☐	☐	☐	
D10	Teacher trained in sign language	☐	☐	☐	

Section E: Resources for Students with Physical Impairments (SWPI)

Are there students with visual impairments enrolled in this school? ☐ Yes ☐ No. (If No, most items in this section should be marked N/A.)

Response options: Available | Not Available | Not Applicable (N/A)

Note for N/A: Select only if there are no SWPI enrolled, or the item is not relevant to the school's context.

No	Item	Available	Not Available	N/A	Remark
E1	Wheelchair (manual or powered)	☐	☐	☐	
E2	Crutches / walkers	☐	☐	☐	
E3	Adjustable desks and chairs	☐	☐	☐	
E4	Writing aids (adapted pens, grips)	☐	☐	☐	
E5	Slant boards / book stands	☐	☐	☐	
E6	Computer/tablet for alternative writing	☐	☐	☐	
E7	Classroom assistant or learning support staff	☐	☐	☐	
E8	Emergency evacuation support plan	☐	☐	☐	
E9	Accessible playground/sports area	☐	☐	☐	

Selection F: Resources for Students with Autism Spectrum Disorder (SWASD)

Are there students with visual impairments enrolled in this school? ☐ Yes ☐ No. (If No, most items in this section should be marked N/A.)

Response options: Available | Not Available | Not Applicable (N/A)

Note for N/A: Select only if there are no SWASD enrolled, or the item is not relevant to the school's context.

No	Item	Available	Not Available	N/A	Remark
F1	Visual schedules/timetables	☐	☐	☐	
F2	Visual communication aids (PECS, picture cards)	☐	☐	☐	
F3	Structured teaching materials	☐	☐	☐	
F4	Quiet/sensory-friendly space	☐	☐	☐	
F5	Sensory regulation materials	☐	☐	☐	
F6	Noise-reduction headphones	☐	☐	☐	
F7	Social stories	☐	☐	☐	
F8	Individualized Education Plan (IEP)	☐	☐	☐	
F9	Trained special needs teacher	☐	☐	☐	
F10	Classroom assistant/shadow teacher	☐	☐	☐	

Section G: Resources for Students with Intellectual Disabilities (SWID)

Are there students with visual impairments enrolled in this school? ☐ Yes ☐ No. (If No, most items in this section should be marked N/A.)

Response options: Available | Not Available | Not Applicable (N/A)

Note for N/A: Select only if there are no SWIDs enrolled, or the item is not relevant to the school's context.

No	Item	Available	Not Available	N/A	Remark
G1	Simplified/adapted textbooks	☐	☐	☐	
G2	Concrete learning materials/manipulatives	☐	☐	☐	
G3	Visual teaching aids	☐	☐	☐	
G4	Life-skills learning materials	☐	☐	☐	
G5	Individualized Education Plan (IEP)	☐	☐	☐	
G6	Classroom assistant/support teacher	☐	☐	☐	
G7	Reinforcement and repetition materials	☐	☐	☐	
G8	Transition planning tools	☐	☐	☐	

Section H: Overall Usability and Implementation

Tick Yes/No based on direct observation across classes/rooms visited; explain in remark column.

No	Item	Yes	No	Remark
H1	Resources observed are actually used in classrooms	☐	☐	
H2	Teachers demonstrate competence in using resources	☐	☐	
H3	Students independently use assistive materials	☐	☐	
H4	Resource provision mostly matches observed learner needs	☐	☐	
H5	Maintenance and replacement mechanisms exist	☐	☐	
H6	Structured peer-support arrangements evident (planned peer tutoring/roles)	☐	☐	
H7	UDL-aligned instructional features evident (planned multiple means/ accommodations)	☐	☐	
H8	Disability-responsive safety preparedness evident (routine risks and urgent situations)	☐	☐	
H9	Supports equitable across disability categories in functional usability	☐	☐	
H10	Observed learning arrangements show mainstream participation (or separate arrangements)	☐	☐	

Addis Ababa University
College of Education and Language Studies
Department of Special Needs Education

Tool 4: Document Review Protocol for Public Primary School

A structured document review was conducted to systematically examine how inclusive education principles for SWDs are formally articulated and institutionalized at the school level. The document review was positioned as a verification and contextualization method within the broader mixed-methods design, providing tangible institutional evidence to triangulate with data from teachers' surveys, FGDs, and school observations.

A. Document Selection and Scope: The review prioritized school-level policy artifacts as primary sources, supplemented by a contextual review of key system-level documents.

Document Level	Types / Examples	Purpose in Analysis
School-Level (Primary Focus)	School vision/mission and core values Annual school improvement/action plans School rules, regulations, and codes of conduct IEP templates or samples (anonymized) Records of teacher training/workshops on inclusive education Resource center inventories/logs SNIE committee meeting minutes and/or focal person records	To examine the translation of national inclusive education commitments into school-level frameworks, procedures, and operational records.
System-Level (Contextual Reference)	Ethiopia's SNIE Strategy MoE inspection frameworks/guidelines Addis Ababa City Administration education directives (where applicable/available)	To establish the normative policy context and expected standards against which school-level enactment can be interpreted.

Selection criteria: Documents were included based on relevance to inclusion/SWDs, use within the study period, accessibility, and ethical appropriateness. Where available, documents were reviewed in their original form; where not available, the absence of specific documents was recorded as a finding relevant to institutionalization.

B. Analytical Framework: Documents were analyzed using a structured checklist aligned with the study's three core constructs: ISC, ISP, and ISPr. Indicators were coded for presence, explicitness, and operational specificity (i.e., whether commitments were accompanied by actionable procedures, roles, or resource provisions).

Inclusive School Culture (ISC) Indicators

- Explicit reference to inclusion, equity, diversity, or SWDs

- Language positioning SWDs as rights-holders within the school community
- Emphasis on collaboration, community-building, and shared responsibility
- Commitment to non-discrimination and positive peer relations

Inclusiveness of School Policy (ISP) Indicators

- Reference to national (and where relevant, international) inclusive education frameworks
- Documented procedures for SWDs admission, assessment, and accommodation
- Evidence of support coordination mechanisms (e.g., committees, focal persons) and IEP procedures
- Evidence of resource allocation, budgeting, or planning for inclusive education

Inclusive School Practices (ISPr) Indicators

- Evidence of planned instructional adaptation (e.g., differentiated instruction and/or UDL-oriented approaches)
- Documentation of assistive resource provision and teacher capacity-building activities
- Monitoring, evaluation, reporting, or follow-up mechanisms related to SWDs support

C. Data Recording and Analysis Procedures

A structured checklist was used to support consistent extraction and interpretation:

- **Identification data**: Document title, type, source, date/year, and school code.
- **Content extraction**: Relevant sections were extracted verbatim where necessary, with concise analytical notes.
- **Coding**: Indicators were coded for presence/absence and rated for explicitness and operational detail.
- **Alignment assessment**: Documents were examined for coherence between stated commitments and defined implementation mechanisms (roles, procedures, resources, monitoring).
- **Triangulation memoing**: Points of convergence/divergence with survey, FGD, and observation data were recorded.

Analysis emphasized descriptive and interpretive examination of:

- The clarity and operational specificity of inclusive commitments
- Gaps between policy statements and actionable implementation provisions
- Evidence of institutional coordination and tangible resource commitments

Appendix **B: Data Collection Tools -Amharic Version**

አዲስ አበባ ዩኒቨርሲቲ
የትምህርትና የቋንቋ ጥናት ኮሌጅ
የልዩ ፍላጎትና አካቶ ትምህርት ክፍል

መጠይቅ 1: የአንደኛ ደረጃ ትምህርት ቤት መምህራን መጠይቅ

ውድ መምህር፣

የዚህ መጠይቅ ዋና ዓላማ በአንደኛ ደረጃ ትምህርት ቤቶች ውስጥ አካል ጉዳተኛ ተማሪዎችን (SWDs) በተመለከተ፣ መምህራን ስለ ትምህርት ቤቱ ባህል፣ ፖሊሲና ተግባራት አካታችነት ያላቸውን እየታ (አተያይ) መረጃ ለመሰብሰብ ነው። መጠይቁ በሁለት ክፍሎች የተከፈለ ሲሆን እነሱም፦ የዳራዊ መረጃና የት/ቤቱ አካታችነት ናቸው። ይህን ጥናት በስኬት ለመጠናቀቅ የእርስዎ ተሳትፎ እጅግ አስፈላጊ ነው። እባክዎ እያንዳንዱን ጥያቄ በሙያዊ ልምድዎ እና ምልከታዎ መሰረት በጥንቃቄ ይሙሉልን። ትክክለኛ ወይም ስህተት መልስ የለም፤ ስለዚህ ማንም ምላሽዎትን መሰረት አድረጎ ሊገመግሙዎት አይችለም። የሚሰጡት ሁሉም መረጃ በጥብቅ ሚስጥራዊነት ይያዛል፤ እንዲሁም ለምርምር ዓላማ ብቻ ጥቅም ላይ የሚውል መሆኑን ከወድሁ አረጋግጣላሁ። የሚያቀርቧቸው ትክክለኛና ታማኝ ግብዓቶች ለዚህ ጥናት ስኬት ትልቅ አስተዋፅዖ አላቸው።

ለጊዜዎና ለትብብርዎ ከልብ አመሰግናለሁ።

ክፍል ፩፡ ዳራዊ መረጃ
መመሪያ፡ ለእርስዎ ትክክል ነው ብለው ለሚያስቡት መልስ በአቅራቢያው በሚገኘው ሳጥን ውስጥ የ(√) ምልክት ያድርጉ።
1. እባክዎን ጸታዎን ያመልክቱ፦ ☐ ወንድ ☐ ሴት
2. እባክዎን የእድሜ ክልልዎን ያመልክቱ፦ ☐ ከ30 ዓመት በታች ☐ ከ31 - 40 ዓመት ☐ ከ41 - 50 ዓመት ☐ 51 ዓመት እና ከዚያ በላይ
3. የትምህርት ደረጃዎን ያመልክቱ፦ ☐ ዲፕሎማ ☐ ዲግሪ
4. እባክዎን አጠቃላይ የማስተማር የሥራ ልምድዎን ያመልክቱ **(በዓመታት)**፦ ☐ ከ1 - 5 ዓመት ☐ ከ6 - 10 ዓመት ☐ ከ11 - 15 ዓመት ☐ 16 ዓመት እና ከዚያ በላይ
5. አካል ጉዳተኛ ተማሪዎችን በማስተማር ረገድ ያለዎትን የሥራ ልምድ ያመልክቱ **(በዓመታት)**፦ ☐ የለኝም ☐ እስከ 5 ዓመት ☐ ከ6 - 10 ዓመት ☐ 11 ዓመትና ከዚያ በላይ
6. በተማሪዎችዎ ወቅታዊ የክህሎት ደረጃ እና በሚገኙ ሙያዊ ሪፖርቶች ላይ በመመስረት፣ የሚያስተምሯቸው አካል ጉዳተኛ ተማሪዎች ያሉባቸውን የጉዳት ደረጃ እንዴት ይገልጹታል? ☐ **ለመገምገም አልችልም፦** በክፍሌ ውስጥ ያሉትን ተማሪዎች የአካል ጉዳት ደረጃ ለመገምገም የሚያስችል በቂ መረጃ ወይም ሙያዊ ሪፖርት የለኝም። ☐ **ቀላል፦** ተማሪዎቹ የተወሰነ የመማር ወይም የባህሪ ችግር አለባቸው፤ ነገር ግን በትንሽ ወይም ያለ ምንም ተጨማሪ ድጋፍ መማርና በክፍል ተግባራት ውስጥ መሳተፍ ይችላሉ። ☐ **መካከለኛ፦** ተማሪዎቹ ውጤታማ በሆነ መንገድ ለመሳተፍና ለመማር መደበኛ ድጋፍ ወይም በትምህርት አሰጣጥና ግብዓቶች ላይ ማሻሻያ (ማስተካከያ) ያስፈልጋቸዋል። ☐ **ከባድ/እጅግ ከፍተኛ፦** ተማሪዎቹ በትምህርት ቤት ተግባራት ውስጥ ለመሳተፍ ጠንካራ፣ ቀጣይነት ያለው ድጋፍ፣ እንዲሁም በትምህርት አሰጣጥና ግብዓቶች ላይ መሠረታዊ ለውጦችን (ማስተካከያ) ይፈልጋሉ።

<u>ክፍል ፪፦ ለአካል ጉዳተኛ ተማሪዎች በት/ቤቱ ውስጥ ያለው የባህል፣ ፖሊሲና ተግባር አካታችነት</u>

ይህ ክፍል ለአካል ጉዳተኛ ተማሪዎች በት/ቤትዎ ውስጥ ያለውን የባህል፣ ፖሊሲና ተግባር አካታችነት በተመለከተ በቀረቡት መግለጫዎች ላይ ያለዎትን የስምምነት ደረጃ እንዲያመለክቱ ይጠይቃል። እባክዎን እያንዳንዱን ዓረፍተ ነገር በጥንቃቄ ከአነበቡ በኋላ፤ ከታች በተቀመጠው መመዘኛ መሠረት የእርስዎን ስምምነት በተሻለ ሁኔታ የሚወክለውን ቁጥር በመምረጥ የ(√) ምልክት ያድርጉ። የነጥብ አሰጣጥ መለኪያ፦ 1 = በጭራሽ አልስማማም፣ 2 = አልስማማም፣ 3 = ለመወሰን እቸገራለሁ፣ 4 = እስማማለሁና 5 = በጣም እስማማለሁ ናቸው። ትክክል ወይም ስህተት የሚባል መልስ የለም። ለሚሰጡት ቅን እና የታሰበበት ምላሽ ከልብ አመሰግናለሁ።

No.	ቀጥሎ ባሉት ዝርዝር ዓ/ነገሮች ላይ በምን ያህል ደረጃ እንደሚስማሙ ወይም እንደማይስማሙ ያመልክቱ...?	Rating Scale				
	አካታች የት/ቤት ባህል፦ ለአካል ጉዳተኛ ተማሪዎች ማኅበራዊ ትስስርን መገንባት	1	2	3	4	5
1	አካል ጉዳተኛ ተማሪዎች በት/ ቤቱ ማኅበረሰብ ውስጥ ሞቅ ያለ አቀባበል ይደረግላቸዋል፤ እንደ ክቡር አባልም ይታያሉ።					
2	መምህራን እና ሰራተኞች የአካል ጉዳተኛ ተማሪዎችን ተሳትፎ እና ትምህርት ለመደገፍ በየጊዜው በጋራ ይሠራሉ።					
3	አካል ጉዳተኛ ተማሪዎች ትርጉም ካለው የክፍል ውስጥና የት/ ቤት እንቅስቃሴዎች ብዙ ጊዜ ይገለላሉ።					
4	በመምህራንና በተማሪዎች (አካል ጉዳተኛ ተማሪዎችን ጨምሮ) መካከል መከባበርና መግባባት በግልጽ ይታያል።					
5	መምህራንና የአካል ጉዳተኛ ተማሪ ወላጆች ስለ ተማሪዎቹ እድገትና ስለሚያስፈልጋቸው ድጋፍ በየጊዜው ይወያያሉ።					
6	የት/ቤቱ አመራሮች መምህራንና ሠራተኞች አካል ጉዳተኛ ተማሪዎችን እንዲደግፉ የሚያበረታቱ አካታች እሴቶችን ያስተዋውቃሉ፣ በተግባርም ያሳያሉ።					
7	አካል ጉዳተኛ ተማሪዎች ሃሳባቸውን እንዲገልጹና በውሳኔ አሰጣጥ ላይ እንዲሳተፉ ይበረታታሉ።					
8	አካል ጉዳተኛ ተማሪዎች በት/ቤቱ ሕይወት ውስጥ እውነተኛ የባለቤትነት ስሜት ለማዳበር እምብዛም ነው።					
9	ት/ ቤታችን አካታችነትን ለማስፋፋት ከአካል ጉዳተኛ ተማሪዎች ቤተሰቦች ጋር በትክክለኛ እምነት ላይ የተመሠረተ አጋርነት አለው።					
	አካታች የት/ቤት ባህል፦ ለአካል ጉዳተኛ ተማሪዎች አካታች እሴቶችን ማስፈን	1	2	3	4	5
10	ት/ቤታችን አካል ጉዳተኞችን ጨምሮ የሁሉንም ተማሪዎች መብት የሚያከብሩ አካታች እሴቶችን ያስተዋውቃል፣ ያስከብራልም።					
11	አካል ጉዳተኞችን ጨምሮ ለእያንዳንዱ ተማሪ መብትና ክብር ያለው እውቅና በት/ ቤቱ የዕለት ተዕለት እንቅስቃሴ ውስጥ በግልጽ ይታያል።					
12	አካታችነት የሁሉንም ተማሪዎች ተሳትፎና ውጤት ለማሻሻል እንደ አንዱ መንገድ ይታያል።					
13	አካል ጉዳተኛ ተማሪዎች እንደ ማንኛውም የት/ቤቱ ማኅበረሰብ ንቁ አባል እኩል ዋጋ ይሰጣቸዋል።					
14	የት/ቤት ማህበረሰብ ለአካል ጉዳተኛ ተማሪዎች (ከአቻዎቻቸው ጋር ሲነጻጸር) ፍትሃዊነትና እኩል አያያዝን ማረጋገጥ አልቻለም።					
15	ት/ ቤታችን ለሁሉም ተማሪዎች ከመድልዎ ነፃ የሆነ አካባቢን ይጠብቃል/ያመቻቻል።					
16	ት/ቤታችን በአካል ጉዳተኛ ተማሪዎችና አካል ጉዳት በሌለባቸው ተማሪዎች መካከል አዎንታዊና አክብሮት የሰፈነበት መስተጋብር እንዲኖር በንቃት ይሠራል።					
17	የት/ቤቱ ምህዳር አካል ጉዳተኛ ተማሪዎች በችሎታቸው ላይ በቂ በራስ መተማመን እንዲኖራቸው በበቂ ሁኔታ አይደግፍም።					

18	መምህራን እና የት/ ቤቱ መሪዎች አካል ጉዳተኞችን ጨምሮ ለሁሉም ተማሪዎች ውጤታማነት ከፍተኛ ግምት/ተስፋ አላቸው።					
	አካታች የትምህርት ቤት ፖሊሲ፦ የፖሊሲ ግንዛቤ እና አተገባበር	1	2	3	4	5
19	የሀገሪቱ የትምህርት ፖሊሲዎች አካል ጉዳተኛ ተማሪዎች በመደበኛ ት/ቤቶች ውስጥ እንዲካተቱ ቅድሚያ ይሰጣሉ።					
20	አካታች ትምህርትን የሚደግፉ ዋና ዋና ሀገራዊ እና አካባቢያዊ የፖሊሲ ማዕቀፎችን በደንብ አውቃለሁ።					
21	የአካታች ትምህርት ስልቶችን በት/ቤት ደረጃ ወደ ተግባር ለመለወጥ ከት/ ቤቱ አመራሮች ጋር በጋራ እሠራለሁ።					
22	የት/ቤታችን መሪ ሰነዶች (ለምሳሌ፦ ራእይ፣ ተልዕኮ፣ ዕቅዶች) ት/ቤቱ ለአካታችነት ያለውን ቁርጠኝነት በግልጽ ያንፀባርቃሉ።					
23	የት/ቤቱ ደንቦችና የዕለት ተዕለት እንቅስቃሴዎች አካል ጉዳተኛ ተማሪዎች በመደበኛ የክፍል ውስጥ ተግባራት እንዲካተቱ በቂ ድጋፍ አያደርጉም።					
24	ት/ቤታችን አካል ጉዳተኞችን ጨምሮ ለሁሉም ተማሪዎች ፍትሃዊ መግቢያ (Admission) ዕድሎችን ያረጋግጣል።					
25	ት/ቤታችን በሕግ ማዕቀፎች በተደነገገው መሠረት አካል ጉዳተኛ ተማሪዎችን ለመለየትና ለመመዘን ተገቢ የሆኑ አሠራሮችን ይከተላል።					
26	ት/ቤታችን የአካል ጉዳተኛ ተማሪዎችን የተለያዩ ፍላጎቶች ለማሟላት የሚያስችሉ በቂ ተደራሽ ቁሳቁሶችና አጋዥ ቴክኖሎጂዎች እጥረት አለበት።					
27	የት/ቤታችን መሠረተ ልማቶችና ተቋማት (ክፍሎች፣ መጸዳጃ ቤቶችና የመጫወቻ ሜዳዎች) ከፖሊሲ መስፈርቶች ጋር በተጣጣመ መልኩ ለአካል ጉዳተኞች ምቹ ናቸው።					
	አካታች የትምህርት ቤት ፖሊሲ፦ ለአካል ጉዳተኛ ተማሪዎች ድጋፎችን ማደራጀት	1	2	3	4	5
28	ት/ቤታችን ለአካል ጉዳተኛ ተማሪዎች የድጋፍ አገልግሎቶችን ለማደራጀት ግልጽና የተቀናጀ ሥርዓት አለው።					
29	ት/ቤታችን አካታች ፕሮግራሞችን የማቀድና የመከታተል ኃላፊነት ያለበት የተቋቋመ የአካቶ ቡድን አለው።					
30	ለአካል ጉዳተኛ ተማሪዎች የግላዊ የትምህርት ዕቅዶች (IEPs) ተዘጋጅተው ተግባራዊ ይደረጋሉ።					
31	መምህራንና ሠራተኞች አካል ጉዳተኛ ተማሪዎችን ለመደገፍ በሚያስችሉ ስልቶች ላይ በቂ ሥልጠና አያገኙም።					
32	ት/ቤታችን አካታችነትን ለሚያበረታቱ ተነሳሽነቶች የሀብት ድልድልን በቅድሚያ ያከናውናል።					
33	ት/ቤታችን አካል ጉዳተኛ ተማሪዎችን በመደገፍ ረገድ በመምህራን፣ በልዩ ፍላጎት ትምህርት ባለሙያዎችና በወላጆች መካከል ያለውን ትብብር ያመቻቻል።					
34	ት/ቤታችን ከግብረመልሶችና ከውጤቶች በመነሳት አካታች የድጋፍ አገልግሎቶችን በየጊዜው ይገመግማል፣ ያሻሽላልም።					
35	ት/ቤታችን የድጋፍ አገልግሎቶችን ለእያንዳንዱ አካል ጉዳተኛ ተማሪ ልዩ ፍላጎት በሚያሟላ መልኩ ያዘጋጃል።					
	አካታች የ/ቤት ተግባራት፦ አካታች የማስተማር-መማር ተግባራት	1	2	3	4	5
36	አካል ጉዳተኞችን ጨምሮ የሁሉንም ተማሪዎች የግል ፍላጎት ለማሟላት ዕለታዊ የትምህርት ዕቅዶቼን በየጊዜው እከልሳለሁ፣ ከፍላገታቸው ጋርም አስማማለሁ።					
37	አካል ጉዳተኞችን ጨምሮ በሁሉም ተማሪዎች መካከል ተሳትፎንና መስተጋብርን የሚያበረታቱ ተለዋዋጭ የመቀመጫና የቡድን ስብጥሮችን እጠቀማለሁ።					
38	አካል ጉዳተኛ ተማሪዎችን በብቃት የሚያካትቱ ትምህርቶችን ለማቀድና ለማስተማር ከሌሎች መምህራን ወይም ባለሙያዎች ጋር በትብብር እሠራለሁ።					

39	የአካል ጉዳተኛ ተማሪዎችን የተለያየ የመማር ችሎታ ለማስተናገድ የሚያስችሉ ልዩ ልዩ የማስተማር ስልቶችን (Differentiated instruction) የምተገብረው አልፎ አልፎ ነው።					
40	አካል ጉዳተኛ ተማሪዎች የመማር ችግር ሲያጋጥማቸው ግልጽ ቅደም-ተከተላዊ መመሪያዎችንና ተጨማሪ ማብራሪያዎችን እሰጣለሁ።					
41	የአካል ጉዳተኛ ተማሪዎችን ለውጥ በአግባቡ ለመገምገም የተለያዩ የምዘና ስልቶችን (ለምሳሌ፦ በቃል፣ በጽሑፍ፣ ከፕሮጀክት ጋር የተያያዙ) እጠቀማለሁ።					
42	አካል ጉዳተኞችን ጨምሮ ተማሪዎች ከትምህርቱ ይዘት ጋር የሚገናኙባቸው የተለያዩ መንገዶችን (ለምሳሌ፦ በእይታ፣ በድምፅ፣ በተግባራዊ እንቅስቃሴዎች) አቀርባለሁ።					
43	አካል ጉዳተኛ ተማሪዎች በክፍል ውስጥ ተግባራት ላይ በንቃት እንዲሳተፉ ለማገዝ የእኩዮች እገዛንና የጋራ ትብብር ትምህርትን አበረታታለሁ።					
44	አካል ጉዳተኛ ተማሪዎች በፈተናዎችና በክፍል ውስጥ ምዘናዎች ወቅት ተገቢውን ድጋፍ/ማስተካከያ አያገኙም።					
45	አካል ጉዳተኛ ተማሪዎች በክፍል ውስጥ ተግባራት ላይ በራስ መተማመን እንዲሳተፉ የሚያነሳሳ ገንቢ ግብረ-መልስና የመማር ድጋፍ እሰጣለሁ።					
	አካታች የት/ቤት ተግባራት፦ የግብዓት አቅርቦት ተግባራት	1	2	3	4	5
46	የአካል ጉዳተኛ ተማሪዎችን ፍላጎት ለማሟላት በቂ ግብዓቶች መኖራቸውን ለማረጋገጥ ከት/ቤቱ አስተዳደር ጋር በትብብር እሠራለሁ።					
47	በት/ቤታችን ውስጥ የሚገኙት የመማሪያና አጋዥ ግብዓቶች የአካል ጉዳተኛ ተማሪዎችን ፍላጎት በአግባቡ አያሟሉም።					
48	በክፍሌ ውስጥ አካል ጉዳተኛ ተማሪዎችን ለመደገፍ ተደራሽ የሆኑ የመማሪያ ቁሳቁሶችን ማግኘትና መጠቀም እችላለሁ።					
49	በክፍሌ ወይም በት/ቤቱ ውስጥ ያሉ መርጃ መሣሪያዎችና ዕቃዎች የአካል ጉዳተኛ ተማሪዎችን ፍላጎት በሚያሟላ መልኩ እንዲስተካከሉ አደርጋለሁ።					
50	የአካል ጉዳተኛ ተማሪዎችን የመማር ፍላጎት ለመደገፍ በት/ቤቱ የግብዓት ማዕከል (Resource Center) ውስጥ የሚገኙ ቁሳቁሶችንና መሣሪያዎችን እጠቀማለሁ።					
51	የአካል ጉዳተኛ ተማሪዎችን መማር ለመደገፍ ያሉትን የአዲዮ-ቪዥዋል ቁሳቁሶችና ቴክኖሎጂዎች በማስተማር ተግባሬ ውስጥ አካትታለሁ።					
52	አካል ጉዳተኛ ተማሪዎች ከሥርዓተ ትምህርቱ ጋር ውጤታማ በሆነ መንገድ እንዲገናኙ አማራጭ ግብዓቶችንና ድጋፎችን ማግኘታቸውን ለማረጋገጥ ከመምህራን ጋር እሠራለሁ።					

አዲስ አበባ ዩኒቨርሲቲ
የትምህርትና የቋንቋ ጥናት ኮሌጅ
የልዩ ፍላጎትና አካቶ ትምህርት ክፍል

መጠይቅ 2: በአንደኛ ደረጃ ት/ቤት የአካታች ትምህርት የግብዓት ማዕከል አስተባባሪዎች ቃለ-መጠይቅ

ውድ IERC አስተባባሪ፣

የዚህ የቃለ-መጠይቅ ቢጋር ዋና ዓላማ የአካቶ ትምህርት በት/ቤት ደረጃ እንዴት እንደሚስተባበርና እንደሚደገፍ ያለመ ሲሆን፣ በተለይም በት/ቤት ባህል፣ ፖሊሲ ትግበራና በዕለት ተዕለት ተግባራት ላይ ትኩረት ያደርጋል። ቢጋሩ ሁለት ክፍሎች ያሉት ሲሆን እነሱም፦ የዳራዊ መረጃና የቃለ-መጠይቅ ጥያቄዎች ናቸው። እንደ IERC አስተባባሪ የእርስዎ አመለካከት አካቶን እንዴት እንደሚደራጅና በተግባር እንደሚከናወን ለመረዳት እጅግ ጠቃሚ ነው። ተሳትፎዎ ሙሉ በሙሉ በፈቃደኝነት ላይ የተመሠረተ ነው። የሚሰጡት መረጃ ሁሉ በሚስጥር የሚጠበቅ ሲሆን ጥቅም ላይ የሚውለውም ለትምህርታዊ (Academic) ጥናት ዓላማ ብቻ ነው። ቃለ-መጠይቁ በግምት ከ30-45 ደቂቃዎችን ይወስዳል። ከመጀመራችን በፊት ጥያቄ ካለዎት እባክዎ ይጠይቁ?

ክፍል ፩፦ ዳራዊ መረጃ

9. ጾታ፦ ☐ ወንድ ☐ ሴት	10. የአሁኑ የሥራ ድርሻ፦_____
11. የትምህርት ደረጃ፦ ☐ዲፕሎማ ☐ዲግሪ ☐ማስተር	12. በIERC አስተባባሪነት የቆዩበት ጊዜ፦ _____
13. የልዩ ፍላጎት ትምህርት ምሩቅ ነዎት? ☐ አዎ ☐ አይደለም	14. በአሁኑ ጊዜ በማስተማር ላይ ነዎት? ☐ አዎ ☐ አይደለም
15. በት/ቤቱ የተመዘገቡ የአካል ጉዳተኛ ተማሪዎች ቁጥር (የሚታወቅ ከሆነ)፦ _____	16. በት/ቤቱ በአሁኑ ጊዜ የተመዘገቡ የአካል ጉዳት ዓይነቶች (ከታወቁ)፦ ☐ የእይታ ☐ የመስማት ☐ የአካል ☐ ኦቲዝም (ASD) ☐ የአእምሮ እድገት መዘግየት (ID) ☐ ድርብ/ተደራራቢ ☐ ሌሎች

ክፍል ፪፦ የቃለ-መጠይቅ ጥያቄዎች (Interview Questions)

1. **በዚህ ት/ቤት ውስጥ አሁን ላይ ያለውን የአካል ጉዳተኛ ተማሪዎች ትምህርት ሁኔታ እንዴት ይገልጹታል?**
   - **(ማብራሪያዎች፦ ዋና ዋና ጥንካሬዎች፤ ቁልፍ ተግዳሮቶች፤ እንደ ጉዳት ዓይነቱ የሚታዩ ልዩነቶች፤ በመደበኛ ክፍሎች ውስጥ የአካቶ ሁኔታ ከልዩ ክፍሎች ጋር ሲነጻጸር።)**
2. **በዚህ ት/ቤት የዕለት ተዕለት እንቅስቃሴ ውስጥ አካቶ ትምህርት ምን ይመስላል?**
   - **(ማብራሪያዎች፦ መምህራን ስለ አካቶ ያላቸው ግንዛቤ፤ የአካቶ መገለጫ ሚሆኑ ምሳሌዎች ካሉ።)**
3. **የት/ቤት አመራሮችና መምህራን ለአካል ጉዳተኛ ተማሪዎች ያላቸውን አመለካከትና የሚጠብቁትን ውጤት (Expectations) እንዴት ይገልጹታል?**
   - **(ማብራሪያዎች፦ የታዘቧቸው ምሳሌዎች፤ የአመራሩ ተጽዕኖ፤ ተማሪዎቹ በት/ቤት እንቅስቃሴዎች ላይ ያላቸው ተሳትፎ።)**
4. **የ/ቤቱ መምህራን፣ ወላጆችና ሌሎች ባለድርሻ አካላት አካቶን ለመደገፍ በጋራ እንዴት ይሠራሉ?**
   - **(ማብራሪያዎች፦ የወላጆች ተሳትፎ፤ የተማሪዎች ድምፅ፤ ከመደበኛ መምህራን ጋር ያለው ቅንጅት፤ ለትብብር ስኬታማ የሆነ አንድ አጋጣሚና ፈታኝ የሆነ አንድ አጋጣሚ ቢቀርብ።)**
5. **በት/ቤቱ ውስጥ ያለውን የአካቶ ትምህርት አሠራር የሚመሩት የትኞቹ ፖሊሲዎች ወይም መመሪያዎች ናቸው?**
   - **(ማብራሪያዎች፦ ስለ SNIE ስትራቴጂ ያለው ግንዛቤ፤ አካቶ በት/ቤቱ ዕቅዶችና ደንቦች ውስጥ ስለመካተቱ፤ የምዝገባ አሠራሮች፤ የምዘናና የፈተና ማስተካከያዎች።)**
6. **በት/ቤቱ ውስጥ ለአካል ጉዳተኛ ተማሪዎች የሚደረገው ድጋፍ እንዴት ነው የሚደራጅውና የሚስተባበረው?**
   - **(ማብራሪያዎች፦ የአካቶ ኮሚቴዎች፤ ተማሪዎችን ለተጨማሪ ድጋፍ የመላኪያ መንገዶች (Referral procedures)፤ የሠራተኞች የሥራ ድርሻ፤ ከወረዳ ወይም ከክፍለ ከተማ ትምህርት ጽ/ቤቶች ጋር ያለው ቅንጅት።)**

7. የግል የትምህርት ዕቅድ (IEP) ወይም ተመሳሳይ የድጋፍ ዕቅዶች እንዴት ይዘጋጃሉ? እንዴትስ ተግባራዊ ይሆናሉ?
   - (ማብራሪያዎች፦ ማን ይሳተፋል፤ የግምገማ ሂደት፤ የሰነዶች አያያዝ ሁኔታ፤ ዕቅዶችን ለመተግበር ያሉ ተግዳሮቶች።)
8. መምህራን ለአካል ጉዳተኛ ተማሪዎች ትምህርትንና ምዘናን **እንዲላመዱ** (Adapt) እንዴት ድጋፍ ያደርጋሉ?
   - (ማብራሪያዎች፦ *ማሰልጠን* ፤ በተግባር ማሳየት፤ ግብዓቶችን ማጋራት፤ አንድ የተሳካ ማላመድና አንድ አስቸጋሪ የሆነ አጋጣሚ።)
9. አጋዥ መሣሪያዎችና ሌሎች የአካቶ ትምህርት ግብዓቶች በት/ቤቱ ውስጥ እንዴት ይያዛሉ? እንዴትስ ጥቅም ላይ ይውላሉ?
   - (ማብራሪያዎች፦ የግብዓቶች ተደራሽነት ሂደት፤ በብዛት ጥቅም ላይ የሚውሉና ጥቅም ላይ የማይውሉ ቁሳቁሶች፤ የግብዓቶቹ ለአጠቃቀም ምቹነት።)
10. የአካቶ ትምህርት ግብዓቶችን ለማግኘትና በብቃት ለመጠቀም ዋና ዋና ተግዳሮቶች ምንድን ናቸው?
    - (ማብራሪያዎች፦ በጀት፤ ጥገና፤ የሠራተኞች ሥልጠና።)
11. ለመምህራን ምን ዓይነት የአካቶ ትምህርት ሙያዊ ማበልጸጊያ ዕድሎች ይቀርባሉ?
    - (ማብራሪያዎች፦ እስካሁን ያልተሟሉ የሥልጠና ፍላጎቶች፤ እንደ አካል ጉዳት ዓይነት የሚለያዩ ስልቶች፤ ልዩ ልዩ የማስተማር ስልቶች፤ አጋዥ ቴክኖሎጂዎች።)
12. የአካቶ ትምህርት አተገባበር በት/ቤቱ ውስጥና በውጭ ሱፐርቫይዘሮች እንዴት ክትትልና ግምገማ ይደረግበታል?
    - (ማብራሪያዎች፦ ሪፖርትና ሰነድ የማዘጋጀት ሁኔታ፤ የሱፐርቪዥን አሠራሮች፤ የክትትልና የተጠያቂነት ሥርዓት።)
13. በልምድዎ፣ የአካቶ ትምህርት ስተራቴጅዎች ወደ ክፍል ውስጥ ተግባር ምን ያህል እየተተረጎሙ ነው?
    - (ማብራሪያዎች፦ በፖሊሲ/ስተራቴጅና በተግባር መካከል ያሉ ክፍተቶች፤ ለነዚህ ክፍተቶች መንስኤ የሆኑ ጉዳዮች።)
14. በሚቀጥለው አንድ ዓመት ውስጥ በዚህ ት/ቤት የአካል ጉዳተኛ ተማሪዎችን አካታችነት ለማሻሻል ሦስት **ተግባራትን** እንዲመርጡ እድል ቢሰጥዎት **ቅድሚያ የሚሰጧቸው ምን ምን ነቸው**? ለምን?
15. ስለ ት/ቤቱ አካቶ ትምህርት እኛ ያልተወያየንበት ሌላ **አስፈላጊ የሚሉት ሌላ ነገር አለ**?
    - (ማብራሪያዎች፦ የት/ቤት ባህል፤ ፖሊሲ፤ ተግባራት።)

ለጊዜዎና ለጠቃሚ ሀሳቦችዎ እጅግ በጣም አመሰግናለሁ!
በሥራዎ ሁሉ መልካም እንዲሆንልዎት እመኛለሁ!

Appendix D: List of Tables

Addis Ababa University
College of Education and Language Studies

Department of Special Needs Education

Table 4.1. *Demographic Characteristics of Primary School Teacher Respondents (N=424)*

Demographic variables	Category	Frequency	Percent
Teachers' sex	Male	206	48.6
	Female	218	51.4
	Total	424	100.0
Teachers' age	Under or 30 years	59	13.9
	31-40 years	129	30.4
	41-50 years	117	27.6
	51 or more years	119	28.1
	Total	424	100.0
Teachers' educational qualification level	Diploma	198	46.7
	Degree	226	53.3
	Total	424	100.0
Teachers' Total Teaching Experiences	up to 5 years	60	14.2
	6-10 years	99	23.3
	11-15 years	115	27.1
	16 or more years	150	35.4
	Total	424	100.0
Teachers' specific teaching experiences with SWDs	Never	159	37.5
	Up to 5 years	124	29.2
	6-10 years	88	20.8
	11 or more years	53	12.5
	Total	424	100.0
Teachers' Perceived Severity of Student Disabilities	Unable to assess	85	20.0
	Mild	170	40.1
	Moderate	127	30.0
	Severe/Profound	42	9.9
	Total	424	100.0

Table 4.11. *Covariances among Fist-Order Constructs (Lower-Order CFA Model)*

			Estimate	S.E.	C.R.	P	Label
BC	<-->	EIV	.351	.032	11.073	***	par_47
BC	<-->	PAI	.200	.023	8.883	***	par_48
BC	<-->	OS	.164	.022	7.390	***	par_49
BC	<-->	TL	.238	.025	9.375	***	par_50
RP	<-->	BC	.290	.030	9.712	***	par_51
EIV	<-->	PAI	.246	.027	9.052	***	par_52
EIV	<-->	OS	.193	.026	7.302	***	par_53
EIV	<-->	TL	.298	.031	9.651	***	par_54
RP	<-->	IV	.342	.035	9.699	***	par_55
PAI	<-->	OS	.345	.033	10.365	***	par_56
PAI	<-->	TL	.258	.028	9.367	***	par_57
RP	<-->	PAI	.327	.033	9.851	***	par_58
OS	<-->	TL	.219	.027	8.039	***	par_59
RP	<-->	OS	.296	.033	8.947	***	par_60
RP	<-->	TL	.385	.037	10.420	***	par_61

Note. BC = Building Community; IV (EIV) = Establishing Inclusive Values; PA (PAI)= Policy Awareness and Implementation; OS = Organizing Support; TL = Teaching–Learning practices; RP = Resource Provision. Estimates represent unstandardized covariances. S.E. = standard error; C.R. = critical ratio. *** $p < .001$.

Table 4.12.*Unstandardized Regression Weights of the Revised Lower-Order CFA Measurement Model*

Item		Factor	Estimate	S.E.	C.R.	P	Label
BC_Item1	<---	BC	1.000				
BC_Item2	<---	BC	.951	.059	16.095	***	par_1
BC_Item3R	<---	BC	.982	.059	16.785	***	par_2
BC_Item4	<---	BC	1.061	.062	17.220	***	par_3
BC_Item5	<---	BC	.961	.061	15.743	***	par_4
BC_Item6	<---	BC	1.080	.062	17.395	***	par_5
BC_Item7	<---	BC	1.057	.062	16.919	***	par_6
BC_Item8R	<---	BC	1.048	.061	17.084	***	par_7
BC_Item9	<---	BC	1.029	.060	17.123	***	par_8
EIV_Item10	<---	EIV	1.000				
EIV_Item11	<---	EIV	.916	.052	17.769	***	par_9
EIV_Item12	<---	EIV	1.020	.056	18.365	***	par_10
EIV_Item13	<---	EIV	.917	.051	18.034	***	par_11
EIV_Item14R	<---	EIV	1.037	.060	17.332	***	par_12
EIV_Item15	<---	EIV	.983	.056	17.438	***	par_13
EIV_Item16	<---	EIV	.914	.051	17.947	***	par_14
EIV_Item17R	<---	EIV	.885	.048	18.455	***	par_15
EIV_Item18	<---	EIV	1.002	.054	18.487	***	par_16
PAI_Item19	<---	PAI	1.000				
PAI_Item20	<---	PAI	1.094	.070	15.689	***	par_17
PAI_Item21	<---	PAI	1.056	.069	15.303	***	par_18
PAI_Item22	<---	PAI	1.213	.074	16.436	***	par_19
PAI_Item23R	<---	PAI	1.149	.069	16.651	***	par_20
PAI_Item24	<---	PAI	1.167	.072	16.267	***	par_21
PAI_Item25	<---	PAI	1.246	.073	17.079	***	par_22
PAI_Item26R	<---	PAI	1.076	.068	15.839	***	par_23
PAI_Item27	<---	PAI	1.195	.073	16.455	***	par_24
OS_Item28	<---	OS	1.000				
OS_Item29	<---	OS	1.069	.061	17.498	***	par_25
OS_Item30	<---	OS	1.108	.062	17.974	***	par_26
OS_Item31R	<---	OS	1.254	.077	16.395	***	par_27
OS_Item32	<---	OS	1.113	.066	16.971	***	par_28
OS_Item33	<---	OS	1.047	.069	15.094	***	par_29
OS_Item34	<---	OS	1.104	.061	17.998	***	par_30
OS_Item35	<---	OS	1.079	.063	17.077	***	par_31
TL_Item36	<---	TL	1.000				
TL_Item37	<---	TL	.892	.050	17.980	***	par_32
TL_Item38	<---	TL	.874	.049	17.859	***	par_33
TL_Item39R	<---	TL	.941	.050	18.949	***	par_34
TL_Item40	<---	TL	.949	.052	18.420	***	par_35
TL_Item41	<---	TL	1.009	.052	19.353	***	par_36
TL_Item42	<---	TL	.927	.049	19.066	***	par_37
TL_Item43	<---	TL	.889	.049	18.004	***	par_38
TL_Item44R	<---	TL	.930	.053	17.576	***	par_39

Item		Factor	Estimate	S.E.	C.R.	P	Label
RP_Item46	<---	RP	1.000				
RP_Item47R	<---	RP	.963	.055	17.500	***	par_40
RP_Item48	<---	RP	.997	.058	17.233	***	par_41
RP_Item49	<---	RP	.888	.054	16.319	***	par_42
RP_Item50	<---	RP	.971	.054	17.971	***	par_43
RP_Item51	<---	RP	.983	.056	17.503	***	par_44
RP_Item52	<---	RP	1.038	.057	18.232	***	par_45
TL_Item45	<---	TL	.920	.048	19.151	***	par_46

Note. The first indicator for each latent construct was fixed to 1.000 to define the latent variable scale. Estimates represent unstandardized regression weights (B). S.E. = standard error; C.R. = critical ratio; *** $p < .001$.

Table 4.13. *Standardized Regression Weights of the Revised Lower-Order CFA Measurement Model (n=424)*

Item		Factor	Standardized loading (λ)
BC_Item1	←	BC	.770
BC_Item2	←	BC	.734
BC_Item3R	←	BC	.761
BC_Item4	←	BC	.777
BC_Item5	←	BC	.722
BC_Item6	←	BC	.783
BC_Item7	←	BC	.766
BC_Item8R	←	BC	.772
BC_Item9	←	BC	.773
EIV_Item10	←	EIV	.791
EIV_Item11	←	EIV	.773
EIV_Item12	←	EIV	.793
EIV_Item13	←	EIV	.782
EIV_Item14R	←	EIV	.759
EIV_Item15	←	EIV	.762
EIV_Item16	←	EIV	.779
EIV_Item17R	←	EIV	.796
EIV_Item18	←	EIV	.797
PAI_Item19	←	PAI	.722
PAI_Item20	←	PAI	.760
PAI_Item21	←	PAI	.742
PAI_Item22	←	PAI	.794
PAI_Item23R	←	PAI	.804
PAI_Item24	←	PAI	.787
PAI_Item25	←	PAI	.824
PAI_Item26R	←	PAI	.767
PAI_Item27	←	PAI	.795
OS_Item28	←	OS	.747
OS_Item29	←	OS	.813
OS_Item30	←	OS	.833
OS_Item31R	←	OS	.768
OS_Item32	←	OS	.792
OS_Item33	←	OS	.714
OS_Item34	←	OS	.834
OS_Item35	←	OS	.796
TL_Item36	←	TL	.813

Item		Factor	Standardized loading (λ)
TL_Item37	←	TL	.765
TL_Item38	←	TL	.761
TL_Item39R	←	TL	.794
TL_Item40	←	TL	.778
TL_Item41	←	TL	.807
TL_Item42	←	TL	.797
TL_Item43	←	TL	.767
TL_Item44R	←	TL	.752
TL_Item45	←	TL	.800
RP_Item46	←	RP	.792
RP_Item47R	←	RP	.775
RP_Item48	←	RP	.766
RP_Item49	←	RP	.733
RP_Item50	←	RP	.791
RP_Item51	←	RP	.775
RP_Item52	←	RP	.800

Note. λ = standardized factor loading. Corresponding error variances can be obtained as $1 - \lambda^2$. All standardized loadings exceed the recommended minimum threshold of .50, with the vast majority falling within the .70–.83 range, indicating strong convergent validity and reliable representation of the underlying latent constructs.

Table 4.14. *Summary of Model Fit Indices of the Revised First-Order CFA Measurement Model*

Model Fit Measures	Model-Fit Criterion	Recommended Acceptable Level and Interpretation	Obtained Values	Model Evaluation
Absolute Fit Indices				
Chi-square (χ^2)	Original $p > .05$ or Bollen–Stine $p > .05$ indicates good fit	Non-significant χ^2 is ideal; Bollen–Stine $p > .05$ supports adequate fit under non-normality	$\chi^2(1257) = 1566.43$, $p < .001$; Bollen–Stine $p = 1.000$	Acceptable given sample size; Bollen–Stine supports good fit
CMIN/DF	< 2 = very good; 2–5 = acceptable	Indicates model parsimony	1.246	Very good fit
RMSEA	≤ .06 = good; .06–.08 = acceptable	Close fit if ≤ .05	0.024 (90% CI: .020–.028)	Excellent fit
SRMR	< .08 indicates good fit	Smaller values indicate better fit	0.026	Excellent fit
Incremental Fit Indices				
TLI	> .90 acceptable; ≥ .95 preferred	Compares model to null model	0.980	Excellent fit
IFI	> .90 acceptable; ≥ .95 preferred	Improvement over null model	0.981	Excellent fit
CFI	> .90 acceptable; ≥ .95 preferred	Robust to sample size	0.981	Excellent fit
NFI	> .90 acceptable	Compares to independence model	0.912	Acceptable fit
RFI	> .90 acceptable	Considers degrees of freedom	0.907	Acceptable fit
Parsimony Fit Indices				
PNFI	> .60 satisfactory	Higher = more efficient model	0.864	Good parsimony
PCFI	> .60 satisfactory	Parsimonious version of CFI	0.930	Good parsimony
Information Criteria (Comparative Fit)				
AIC	Lower = better fit and parsimony	Useful for comparing alternative models	1912.430	Indicates efficient model
BIC	Lower = better; penalizes complexity	Strong indicator of parsimony	1961.993	Strongly parsimonious model
ECVI	Lower = better expected replication	Should be lower than saturated and independence models	4.521	Good replication potential
Hoelter's Critical N				
Hoelter .05	> 200 = adequate; > 300 = strong	Minimum sample size needed for model to be acceptable	363	Strongly adequate sample
Hoelter .01	> 200 = adequate; > 300 = strong	Stricter criterion	372	Strong sample adequacy

Note. The Bollen–Stine bootstrap p-value (1.000) indicates the model fits well even when accounting for potential non-normality.

Table 4.15. *Cronbach's Alpha Coefficients for First- and Second-Order Constructs in the Revised Measurement Model (N = 424)*

Second-order construct	First-order construct	Original No of items	Items deleted during CFA	Items retained in refined model	Total (Aggregated) Cronbach's α
ISC	BC	9	-	9	0.908
	IV	9	-	9	0.929
	Sub-total	18	-	18	0.943
ISP	PAI	9	-	9	0.942
	OS	8	-	8	0.919

	Sub-total	17		17	0.940
ISPr	TL	12	2	10	0.940
	RP	7	-	7	0.917
	Sub-total	19	2	17	0.953

Note. All Cronbach's alpha coefficients meet or exceed the commonly recommended threshold of $\alpha \geq .70$, indicating excellent internal consistency for both first- and second-order constructs.

Table 4.19. *Covariances among Second-Order Constructs (Higher-Order CFA Model)*

Covariance			Estimate	S.E.	C.R.	P
ISC	<-->	ISP	.206	.023	9.086	< .001
ISPr	<-->	ISP	.263	.028	9.549	< .001
ISPr	<-->	ISC	.237	.025	9.504	< .001

Table 4.20. *Summary of Model Fit Indices of the Revised Higher-Order CFA Measurement Model*

Model Fit Measures	Model-Fit Criterion	Recommended Acceptable Level and Interpretation	Obtained Values	Model Evaluation
Absolute Fit Indices				
Chi-square (χ^2) / Bollen–Stine p-value	Original p > .05 or Bollen–Stine p > .05 indicates good fit	Non-significant χ^2 is ideal; Bollen–Stine p > .05 supports adequate fit under non-normality	χ^2 = 1588.263, df = 1263, p < .001; Bollen–Stine p = 1.000	Acceptable given sample size; Bollen–Stine supports good fit
CMIN/DF	< 2 = very good; 2–5 = acceptable	Indicates model parsimony	1.258	Very good fit
RMSEA	≤ .06 = good; .06–.08 = acceptable	Close fit if ≤ .05	0.025 (90% CI: .021–.028; PCLOSE = 1.000)	Excellent fit
SRMR	< .08 indicates good fit	Smaller values indicate better fit	0.024	Excellent fit
Incremental Fit Indices				
TLI	> .90 acceptable; ≥ .95 preferred	Compares model to null model	0.979	Excellent fit
IFI	> .90 acceptable; ≥ .95 preferred	Improvement over null model	0.980	Excellent fit
CFI	> .90 acceptable; ≥ .95 preferred	Robust to sample size	0.980	Excellent fit
NFI	> .90 acceptable	Compares to independence model	0.911	Acceptable fit
RFI	> .90 acceptable	Considers degrees of freedom	0.906	Acceptable fit
Parsimony Fit Indices				
PNFI	> .60 satisfactory	Higher = more efficient model	0.860	Good parsimony
PCFI	> .60 satisfactory	Parsimonious version of CFI	0.934	Good parsimony
Information Criteria (Comparative Fit)				
AIC	Lower = better fit and parsimony	Useful for comparing alternative models	1922.263	Indicates efficient model; far lower than independence model
ECVI	Lower = better expected replication	Should be lower than saturated and independence models	4.544 (Saturated = 6.761; Indep. = 42.460)	Good replication potential (lower than both comparison models)
Hoelter's Critical N				

Model Fit Measures	Model-Fit Criterion	Recommended Acceptable Level and Interpretation	Obtained Values	Model Evaluation
Hoelter .05	> 200 = adequate; > 300 = strong	Minimum sample size needed for model to be acceptable	359	Strong
Hoelter .01	> 200 = adequate; > 300 = strong	Stricter criterion	369	Strong

Note. Reported criteria should be justified with citations in text (or here). If Bollen–Stine bootstrap was used, report the bootstrap p value in this table or in the note (e.g., "Bollen–Stine p = 1.000"). AIC and ECVI are primarily for comparing alternative models estimated on the same data.

Table 4.21. *Unstandardized Regression Weights of the Revised Higher-Order CFA Measurement Model*

Path			Estimate	S.E.	C.R.	P
BC	<---	ISC	1.000			
EIV	<---	ISC	1.219	.076	16.068	< .001
PAI	<---	ISP	1.000			< .001
OS	<---	ISP	.868	.065	13.397	< .001
RP	<---	ISPr	1.213	.084	14.498	< .001
TL	<---	ISPr	1.000			

Note. BC, EIV, PAI, OS, RP, and TL are first-order latent factors; ISC, ISP, and ISPr. For reference indicators (BC, PAI, TL), loadings were fixed to 1.00 for model identification and therefore have no standard errors, critical ratios, or *p*-values reported.

Table 4.22. *Standardized Regression Weights of the Higher-Order CFA Model*

			λ (Standardized loading)	Error Variance = $1 - \lambda^2$
BC	<---	ISC	.978	0.044
EIV	<---	ISC	.984	0.032
PAI	<---	ISP	1.107	−0.225
OS	<---	ISP	.851	0.276
RP	<---	ISPr	.930	0.135
TL	<---	ISPr	.849	0.279

Note. All first-order constructs exhibit standardized loadings above 0.70, confirming strong higher-order convergent validity.

Table 4.23. *Factor Correlation Matrix for Second-Order Constructs*

Construct	ISC	ISP	ISPr
Inclusivity of School Culture (ISC)	1.00	0.609	0.784
Inclusivity of School Policy (ISP)	0.609	1.00	0.738
Inclusivity of School Practice (ISPr)	0.784	0.738	1.00

Note. Values are latent factor correlations among the second-order constructs estimated in the revised higher-order CFA model.