

PARTICLE ACCELERATORS PRINCIPLE, WORKING AND APPLICATION

By

YOBSAN OLANI

A PROJECT SUBMITTED IN PARTIAL FULFILLMENT OF THE
REQUIREMENTS FOR THE DEGREE OF
MASTER OF SCIENCE IN PHYSICS
AT
ADDIS ABABA UNIVERSITY
COLLEGE OF NATURAL SCIENCES
ADDIS ABABA, ETHIOPIA

© Copyright by YOBSAN OLANI, 2018

ADDIS ABABA UNIVERSITY
COLLEGE OF NATURAL AND COMPUTATIONAL SCIENCE
DEPARTMENT OF PHYSICS

The undersigned hereby certify that they have read and recommend to the College of Natural Sciences for acceptance a project entitled "**PARTICLE ACCELERATORS PRINCIPLE, WORKING AND APPLICATION**" by **YOBSAN OLANI** in partial fulfillment of the requirements for the degree of **Master of science in Physics**.

Approved by the Examination Committee:

Advisor: _____

Examiner: _____

Examiner: _____

Chairperson: _____

ADDIS ABABA UNIVERSITY

Date:

Author: **YOBSAN OLANI**

Title: **PARTICLE ACCELERATORS PRINCIPLE, WORKING AND APPLICATION**

Department: **College of Natural and Computational Science**
Department of Physics

Degree: **MSc.**
Convocation: **September**
Year: **2018**

Permission is herewith granted to Addis Ababa University to circulate and to have copied for non-commercial purposes, at its discretion, the above title upon the request of individuals or institutions.

Signature of Author

THE AUTHOR RESERVES OTHER PUBLICATION RIGHTS, AND NEITHER THE PROJECT NOR EXTENSIVE EXTRACTS FROM IT MAY BE PRINTED OR OTHERWISE REPRODUCED WITHOUT THE AUTHOR'S WRITTEN PERMISSION.

THE AUTHOR ATTESTS THAT PERMISSION HAS BEEN OBTAINED FOR THE USE OF ANY COPYRIGHTED MATERIAL APPEARING IN THIS PROJECT (OTHER THAN BRIEF EXCERPTS REQUIRING ONLY PROPER ACKNOWLEDGEMENT IN SCHOLARLY WRITING) AND THAT ALL SUCH USE IS CLEARLY ACKNOWLEDGED.

Table of Contents

Table of Contents iv

List of Tables vi

List of Figures vi

Abstract vii

Acknowledgements viii

1 Introduction 1

2 History of Particle Accelerators 4
- 2.1 **Historical roots of particle accelerators** . . . 4
  - 2.1.1 **The main history line** . . . 4
  - 2.1.2 **The second history line** . . . 7
  - 2.1.3 **The third history line** . . . 9
- 2.2 **The main development of particle accelerators** . . . 10
- 2.3 **The current situation of particle accelerators** . . . 14

3 Particle Accelerators Construction and Working Principle 15
- 3.1 **Van De Graaf Generator** . . . 16
- 3.2 **Cockcroft- Walton Voltage Multiplier** . . . 20
- 3.3 **Cyclotron** . . . 23
- 3.4 **Linear Accelerator (Linac)** . . . 27
- 3.5 **Betatron** . . . 30
- 3.6 **Synchrotron** . . . 35
  - 3.6.1 **Electron synchrotron** . . . 35
  - 3.6.2 **Proton-synchrotron** . . . 38
- 3.7 **Synchrocyclotron** . . . 41

4 Applications of Particle Accelerators 44
- 4.1 **Research applications** . . . 45

4.2 **Elemental analysis** 51
4.3 **Medicine** 52
4.4 **Industrial processing** 54
4.5 **Power engineering** 57

5 Conclusion **59**

References **61**

List of Figures

2.1 Cockcroft and Walton's apparatus for splitting the lithium nucleus. . . . 5
2.2 Two-stage Tandem accelerator. 6
2.3 Livingston chart. 13

3.1 Demonstration of charge on hollow conductor. 17
3.2 Schematic sketch of Van de Graaff Generator. 18
3.3 Schematic sketch of Cockcroft Walton circuit. 21
3.4 Schematic sketch of cyclotron. 23
3.5 Schematic sketch of linear accelerator. 27
3.6 Pole pieces for the betatron. 30
3.7 Schematic diagram of betatron chamber. 31
3.8 The alternating cycle of magnetic field demonstrating the injection and ejection of electrons. 32
3.9 The ring magnet. 36
3.10 The electron synchrotron 36
3.11 Schematic design of proton synchrotron 39
3.12 Magnet used in proton synchrotron. 39
3.13 Schematic of synchrocyclotron 41

Abstract

One of the most important tools of nuclear science is the particle accelerator. Prior to its invention in 1928, the only known sources of particles that could induce nuclear reactions were the natural alpha particle emitters, for example radium. In fact, the only type of nuclear reaction known during that period was that of an alpha particle interacting with a nucleus and producing a proton. Today the use of natural alpha emitters to induce nuclear reactions is largely of historical interest because accelerators produce higher intensities and higher energies of not only alpha particles. Particle accelerators are now widely used in a variety of applications for scientific research, elemental analysis, medicine, industrial processing, power engineering, atomic physics, nuclear physics and industrial processing. It may have a major impact in the world in the next century. In this review we reveal that the history and development, working principles and construction of some major types of particle accelerators and some major applications of particle accelerators.

Acknowledgements

First of all, I would like to thank the almighty **God** who provide me a constant source of inspiration and joy and for letting me to accomplish this Msc research project.

Secondly, I am deeply grateful to **Dr. Tilahun Tesfaye** my adviser and instructor for his sound comments and criticisms and for doing his best to help me as I finish this work in time.

I also acknowledge financial support for my studies provided by Addis Ababa University.

Next, I would also like to express my best thanks to my instructors, Colleagues and my friends Adisu Balcha and Yohanis Jemere in the physics Department for their valuable suggestions and encouragement they have offered me.

Moreover, I would like to thank Ministry of Education **(MOE)** for sponsoring and giving me this chance.

Finally, I extend my special thanks to my wife **Tigist Bekele** and my son **Wabi Yobsan** for they gave me their time as I finish my project work.

Chapter 1

Introduction

Particle accelerators are specially designed machines initially discovered in 1928 that are used to accelerate the elementary particles to desired energy range. Both heavier and lighter nuclei can be used to accelerate the particles. Protons, neutrons, deuterons, electrons,etc are accelerated using particle accelerators.

Accelerators are used to produce a beam of high energy charged particles directed along a predefined path.This is accomplished by generating ions and causing them to fall through a large potential difference.

In some of the accelerators, the particles are accelerated using constant potential difference. Such accelerators fall under the category of electrostatic accelerators, for example, Van de Graaff generator and Cockcroft-Walton machine. The electrostatic accelerators can give an output of particles with $4-6$ MeV energy. When particles form closed-path again and again, then they get accelerated. The accelerators that work on closed-path orbits and yield high energy particles are known as cyclic accelerators, for example, cyclotron, betatron, and synchrotron. In a linear accelerators, there are a series of tubular electrodes connected to an alternating voltage. The alternating voltage ensures that the voltage of each electrode switches back and forth between positive and negative. Linear accelerators or linacs, provide the acceleration along a straight line

beam path, whereas cyclic accelerators cause the ion beam to travel in a circular path.

Once these ions are obtained, then they should be introduced to the defined accelerator using proper accelerating voltage. Once the particle enters the accelerator, then it is under electric or magnetic field and traverses an orbit of radius r and velocity v. The particles are accelerated up to the desired energy. Subsequently, when the desired energy level for the particle is obtained, then the particles are extracted out of the accelerator.

Particle accelerators use electric fields to speed up and increase the energy of a beam of particles, which are steered and focused by magnetic fields. The particle source provides the particles, such as protons or electrons that are to be accelerated. The beam of particles travels inside a vacuum in the metal beam pipe. The vacuum is crucial to maintaining an air and dust free environment for the beam of particles to travel unobstructed. Electromagnets steer and focus the beam of particles while it travels through the vacuum tube.

Accelerators are composed of numerous subsystems [20], the realization of which pushes the boundaries of technology, at least at the forefront of the field. Producing an accelerator subsystem, such as high-field magnets or high-gradient radio frequency accelerating cavities, requires understanding of science and engineering in a diverse array of disciplines. Considering the accelerator as a whole, controlling large numbers of charged particles requires a detailed understanding of how they interact with the magnetic and electric fields that they encounter, with their surroundings, and with each other though collective effects. Many of these effects are highly non-linear and require the development of novel techniques. This matrix of theoretical, technical, and practical skills remains essential for operations and maintenance throughout the lifetime of the accelerator.

Particle accelerators are devices that produce energetic beams of particles which are used for; understanding the fundamental building blocks of nature and the forces that act upon them (nuclear and particle physics), understanding the structure and dynamics of

materials and their properties (physics, chemistry, biology, medicine), medical treatment of tumors and cancers, Production of medical isotopes, Sterilization, Ion Implantation to modify the surface of materials,etc.

Whether it's medical or scientific research, consumer product development or national security, particle accelerators touch nearly every part of our daily lives. We will try to see more in the next chapters about particle accelerators principle and their applications.

Chapter 2

History of Particle Accelerators

In this chapter we will see the history of particle accelerators from principal history line to current history line of particle accelerators.

2.1 Historical roots of particle accelerators

The early history of accelerators can be traced from three separate roots. Each root is based on an idea for a different acceleration mechanism.

2.1.1 The main history line

The first root to be described is generally taken as the principal history line. In 1895 Lenard described electron scattering on gases. After eighteen years in 1913 Franck and Hertz realized excitation of electron shells by electron bombardment. In 1906 Rutherford bombards mica sheet with natural alphas and develops the theory of atomic scattering. Also Rutherford published theory of atomic structure in 1911 and in 1919 Rutherford induces a nuclear reaction with natural alphas. He needs a source of many MeV to continue research on the nucleus.

Ernest Rutherford realized the need of particle accelerators, but the electrostatic machines available were far from reaching the necessary voltage. Suddenly, the situation changed in 1928, when Gurney and Gamov independently predicted tunneling and it appeared that an energy of 500 keV might just suffice to split the atom. This seemed

technologically feasible to Rutherford and he immediately encouraged Cockcroft and Walton to start designing a 500 keV particle accelerator. Four years later in 1932, they split the lithium atom with 400 keV protons[8]. This was the first fully man-controlled splitting of the atom which earned them the Nobel prize in 1951.

Particle physics research has always been the driving force behind accelerator development and it is therefore very natural to consider high-energy physics as the birth place. The original apparatus, used is shown in fig. 2.1 below.

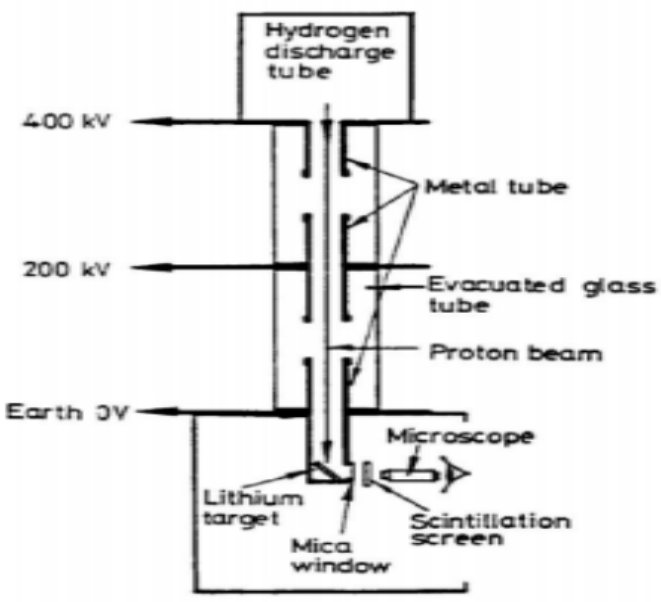

Figure 2.1: Cockcroft and Walton's apparatus for splitting the lithium nucleus.

At about the same time Van de Graaff, an American who was in Oxford as a Rhodes scholar, invented an electrostatic generator for nuclear physics research and later in Princeton, he built his first machine, which reached a potential of 1.5 MV. It took some time to develop the acceleration tube and this type of machine was not used for physics research until well after the atom had been split in 1932.

Two new features appeared in later versions of the Van de Graaff generator. Firstly, the sparking threshold was raised by putting the electrode system and accelerating tube in a high-pressure tank containing dry nitrogen, or Freon, at 9-10 atmospheres, which

enables operation typically up to 10 MV. The second was a later development, which has the special name of the Tandem accelerator (Fig. 2.2).

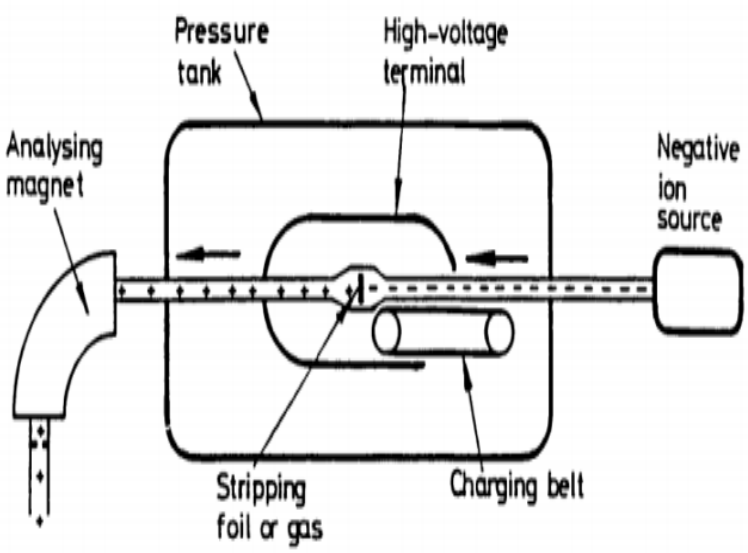

Figure 2.2: Two-stage Tandem accelerator.

The new feature in the Tandem accelerator was to use the accelerating voltage twice over. First an extra electron is attached to the neutral atoms to create negative ions[8].

In recent years, a great deal of development has been done and it is now possible to obtain negative ion sources for almost all elements. The negative ion beam is injected at ground potential into the Tandem and accelerated up to the high-voltage terminal where it passes through a thin foil which strips at least two electrons from each negative ion converting them to positive ions. They are then accelerated a second time back to earth potential.

The Van de Graaff generator and the Tandem provide beams of stable energy and small energy spread, but they are unable to provide as high currents as the Cockcroft-Walton generator.

2.1.2 The second history line

The direct-voltage accelerators were the first to be exploited for nuclear physics research, but they were limited to the maximum voltage that could be generated in the system. This limitation was too restrictive for the requirements of high-energy physics and an alternative was needed. An alternative had already been proposed in 1924 in Sweden by Ising. He planned to repeatedly apply the same voltage to the particle using alternating fields and his invention was to become the underlying principle of all of today's ultra-high-energy accelerators. This is known as resonant acceleration.

The difference between the acceleration mechanisms of Cockcroft and Walton and Ising depend upon whether the fields are static or time-varying. The electric field can be expressed in a very general form as the sum of two terms, the first being derived from a scalar potential and the second from a vector potential,

$$\overrightarrow{E} = -\nabla\phi - \frac{\partial \overrightarrow{A}}{\partial t} \tag{2.1}$$

where,

$$\overrightarrow{B} = \nabla \times \overrightarrow{A} \tag{2.2}$$

The first term in (2.1) describes the static electric field of the Cockcroft-Walton and Van de Graaff machines. When a particle travels from one point to another in an electrostatic field, it gains energy according to the potential difference, but if it returns to the original point, for example, by making a full turn in a circular accelerator, it must return to its original potential and will lose exactly the energy it has gained. Thus a gap with a DC voltage has no net accelerating effect in a circular machine.

The second term in (2.1) describes the time-varying field. This is the term that makes all the present-day high-energy accelerators function. The combination of (2.1) and (2.2) yields Faraday's law

$$\nabla \times \overrightarrow{E} = \frac{-\partial \overrightarrow{B}}{\partial t} \tag{2.3}$$

which relates the electric field to the rate of change of the magnetic field. There are two basic geometries used to exploit Faraday's Law for acceleration. The first of which is the basis of Ising's idea and the second history line, and the second is the basis of the third history line to be described later.

Ising suggested accelerating particles with a linear series of conducting drift tubes and Widere built a proof of principle linear accelerator in 1928. Alternate drift tubes are connected to the same terminal of an radio-frequency generator. The generator frequency is adjusted so that a particle traversing a gap sees an electric field in the direction of its motion and while the particle is inside the drift tube the field reverses so that it is again the direction of motion at the next gap. As the particle gains energy and speed the structure periods must be made longer to maintain synchronism.

Ising's original idea can be considered as the beginning of the true accelerator. Indeed, the next generation of linear colliders, which will be in the TeV range, will probably still be applying his principle of resonant acceleration, except that the frequency will probably be in the tens of GHz range.

Technologically the linear accelerator, or linac as it is known, was rather difficult to build and, during the 1930's, it was pushed into the background by a simpler idea conceived by Ernest Lawrence in 1929, the fixed-frequency cyclotron. Lawrence's idea was inspired by a written account of Widere's work and M. Livingston demonstrated the principle by accelerating hydrogen ions to 80 keV in 1931. Lawrence's first model worked in 1932. It was less than a foot in diameter and could accelerate protons to 1.25 MeV. He split the atom only weeks after Cockcroft and Walton. Lawrence received the Nobel Prize in 1939, and by that year the University of California had a 5-foot diameter cyclotron (the Crocker cyclotron) capable of delivering 20 MeV protons, twice the energy of the most energetic alpha particles emitted from radioactive sources.

The cyclotron opened up whole new avenues of research in nuclear physics, including the production of unstable nuclei and non-naturally occurring elements [10]. It also

enabled particle-beam treatment of cancer. The cyclotron, however, was limited in energy by relativistic effects and despite the development of the synchrocyclotron, a new idea was still required to reach yet higher energies in order to satisfy the curiosity of the particle physicists.

2.1.3 The third history line

In the above section, it was mentioned that there were two equipment configurations for exploiting Faraday's Law for acceleration. First, consider the application of Faraday's Law to the linear accelerator, which is made more evident by enclosing the gaps in cavities.

The azimuthal magnetic field is concentrated towards the outer wall and links the beam. Faraday's Law tells us the periodic rise and fall of this magnetic field induces an electric field on the cavity axis, which can be synchronized with the passage of the beam pulse.

As the flux through the magnet core is increased, it induces an azimuthal electromotive force which drives the charged beam particles to higher and higher energies. The trick is to arrange for the increase in the magnetic field in the vicinity of the beam to correspond to the increase in particle energy, so that the beam stays on the same orbit. This device, the betatron, is insensitive to relativistic effects and was therefore ideal for accelerating electrons. The betatron has also the great advantages of being robust and simple. The one active element is the power converter that drives the large inductive load of the main magnet. The focusing and synchronization of the beam energy with the field level are both determined by the geometry of the main magnet.

Widere put this idea in his laboratory notebook, while he was a student, but it remained unpublished only to re-surface many years later when Kerst built the first machine of this type. When in 1941 Kerst and Serber published a paper on the particle oscillation in their betatron , the term betatron oscillation became universally adopted

for referring to such oscillations in all devices.

The development of betatrons for high-energy physics was short, ending in 1950 when Kerst built the world's largest betatron (300 MeV), but they continued to be built commercially for hospitals and small laboratories where they were considered as reliable and cheap. In fact the betatron acceleration mechanism is still of prime importance. In the present day synchrotron, there is a small contribution to the beam's acceleration which arises from the increasing field in the main dipoles. If an accurate description of the longitudinal motion is required, then the betatron effect has to be included.

2.2 The main development of particle accelerators

By the 1940's three acceleration mechanisms had been demonstrated:- DC acceleration, resonant acceleration and the betatron mechanism. There were no new ideas for acceleration mechanisms until the mid-1960's.

In order to accelerate particles to very high energies, it is also necessary to have focusing mechanisms in the transverse and longitudinal (energy) planes. This was not always appreciated. In the early cyclotrons, for example, the field was made as uniform as possible only to find that the beam was unstable. Livingston who was Lawrence's research student, told how they shimmed the magnet for each small step in energy to keep the beam stable, thus ending up with a field shape for transverse stability that decreased with radius. Theory has later shown that this decrease should be an inverse power law of the radius between zero and unity.

The cyclotron is limited by relativistic effects, which cause the particles to slow down and lose synchronism with the radio frequency field. At first glance it would appear that one would only have to reduce the frequency in order to maintain synchronism, but this is a little too naive since the spread in revolution frequency with energy would quickly exploit the natural energy spread in the beam and disperse the particles away from the peak of the radio frequency voltage [8]. In this case a longitudinal focusing mechanism

is needed. This problem was overcome by E. McMillan and independently by V. Veksler who discovered the principle of phase stability in 1944 and invented the synchrotron.

Phase stability is general to all radio frequency accelerators except the fixed-frequency cyclotron. The effect is that a bunch of particles, with an energy spread, can be kept bunched throughout the acceleration cycle by simply injecting them at a suitable phase of the radio frequency cycle. This focusing effect was strong enough that the frequency modulation in the synchro-cyclotron did not have to be specially tailored and was simply sinusoidal. Synchro-cyclotrons can accelerate protons to about 1 GeV, a great improvement on the simple cyclotron, but the repetition rate reduces the particle yield.

In the synchrotron the guide field increases with particle energy, so as to keep the orbit stationary as in the betatron, but acceleration is applied with an radio frequency voltage via a gap or cavity. In 1946 F. Goward and D. Barnes were the first to make a synchrotron work, and in 1947 M. Oliphant, J. Gooden and G. Hyde proposed the first proton synchrotron for 1 GeV in Birmingham, UK. However, the Brookhaven National Laboratory, USA, built their 3 GeV Cosmotron by 1952, just one year ahead of the Birmingham group.

Up to 1952 the only mechanism known for focusing in the transverse plane was called weak, or constant-gradient focusing. In this case, the guide field decreases slightly with increasing radius and its gradient is constant all round the circumference of the machine. The tolerance on the gradient is severe and sets a limit to the size of such an accelerator. The aperture needed to contain the beam also becomes very large and the magnet correspondingly bulky and costly.

In the early fifties the limit was believed to be around 10 GeV. In the same year as the Cosmotron was finished (1952) E. Courant, M. Livingston and H. Snyder proposed strong focusing, also known as alternating-gradient (AG) focusing. The idea had been suggested earlier by Christofilos but it was not published. This new principle revolutionized synchrotron design, allowing smaller magnets to be used and higher energies to

be envisaged [8].

The synchrotron quickly overshadowed the synchrocyclotron and the betatron in the race for higher energies. The adoption of alternating gradient focusing for machines and transfer lines was even quicker.

The next step was the storage ring collider.In physics experiments, the useful energy for new particle production is the energy that is liberated in the centre-of-mass system. When an accelerator beam is used on a fixed target, only a fraction of the particle's energy appears in the centre-of-mass system, whereas for two equal particles in a head-on collision, all of the particles' energy is available. This fundamental drawback of the fixed-target accelerator becomes more punitive as the energy increases.

The storage-ring collider now dominates the high-energy physics field. Single-ring colliders, using particles and antiparticles in the same magnetic channel, were the first type of collider to be exploited at Frascati in the AdA (Annelli di Accumulazione) project (1961). The first double-ring proton collider was the CERN ISR (Intersecting Storage Rings), 1972-1983 [8].

Some of the other accelerators, which may not have featured as a high energy machine, but have found their place as injectors or as being suitable for some special application.

The microtron, sometimes known as the electron cyclotron, was an ingenious idea due to Veksler (1945). The electrons follow circular orbits of increasing radius, but with a common tangent. An radio frequency cavity positioned at the point of the common tangent supplies a constant energy increment on each passage. The relativistic mass increase slows the revolution frequency of the electrons, but by a constant increment on each passage. If this increment is a multiple of the radio frequency oscillator frequency, the electrons stay in phase, but on a different orbit. Microtrons operate at microwave frequencies and are limited to tens of MeV.

The radio-frequency quadruple (RFQ) suggested in 1970 by I. Kapchinski and V.

Telyakov is useful at low energies and is increasingly replacing the Cockcroft-Walton as injector. The RFQ combines focusing and acceleration in the same RF field.

Generally, the development of particle accelerators is described by Livingston chart drawn below. This Livingston chart shows, accelerator energy versus time, updated to

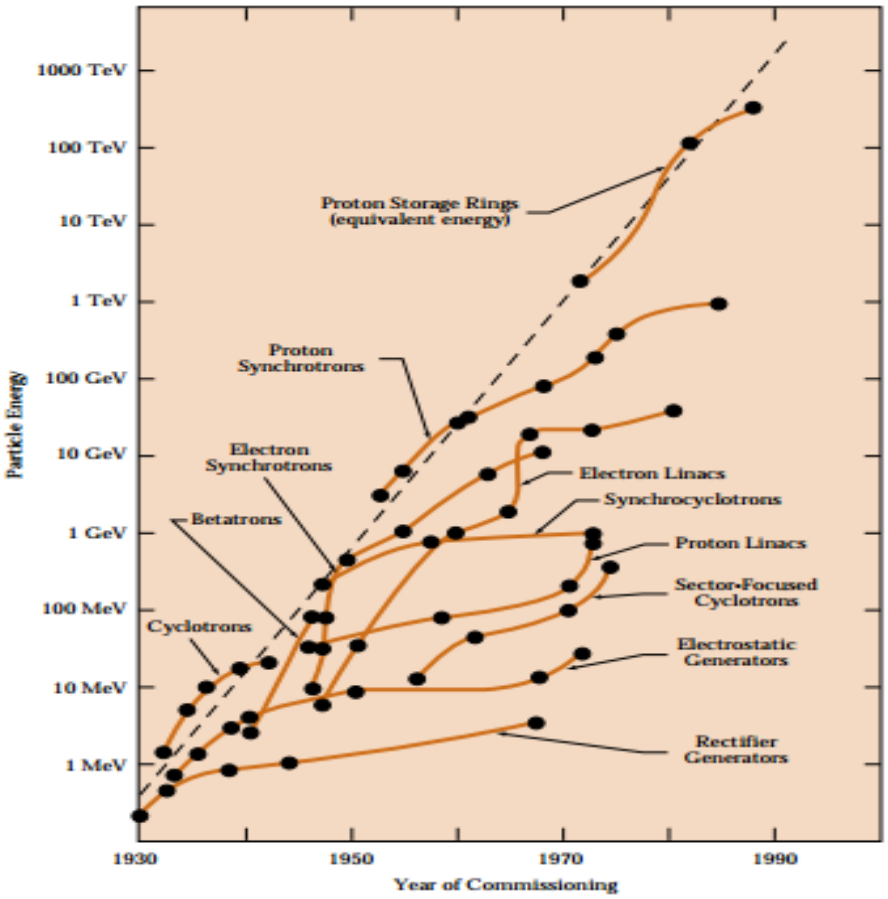

Figure 2.3: Livingston chart.

include machines that came on line during the 1980s in a very striking way and how the succession of new ideas and new technologies has relentlessly pushed up accelerator beam energies over five decades at the rate of over one and a half orders of magnitude per decade. One repeatedly sees a new idea, which rapidly increases the available beam energy, but only to be surpassed by yet another new idea. Meanwhile the first idea continues into saturation and possibly into quasi-oblivion. The filled circles indicate new or upgraded accelerators of each type [10].

2.3 The current situation of particle accelerators

In the present situation circular colliders dominate the high-energy field. The most familiar example of a modern particle accelerator is the massive Hadron collider in 2012 at CERN, which is used to study the properties of the hypothetical particle known as the Higgs boson [10].

Chapter 3

Particle Accelerators Construction and Working Principle

In this chapter we describe charged particle accelerators principle,construction and working. Charged particle accelerators use the same principle. Charged particle accelerates between a gap of two electrodes, when there is a potential difference between them, then the energy transferred is equal to charge times potential difference.

Electric fields spaced around the accelerator switch from positive to negative at a given frequency, creating radio waves that accelerate particles in bunches. Particles can be directed at a fixed target, such as a thin piece of metal foil, or two beams of particles can be collided. Particle detectors record and reveal the particles and radiation that are produced by the collision between a beam of particles and the target [1].

In some of the accelerators, the particles are accelerated using constant potential difference. The first accelerators were relatively low energy accelerators, usually less than 50 MeV. Some of these early systems were Cockcroft - Walton and Van de Graaff generator. As investigators probed deeper into the nucleus, greater energies were needed resulting in accelerators with energies in the billion electron volt (GeV) range [1].

Most of accelerators have an upper limit of energy that can be imparted to an ion. This is because at really high energies, relativistic effects predominate. At extremely

high energies, the relative mass of a particle requires more energy to accelerate it, consequently the size of the accelerating system increases significantly. The velocity ratio, = v/c, where v is the velocity of the particle and c is the speed of light, is used to calculate the relativistic mass m, of an accelerated particle in relation to its rest mass, m_o which is given by: m=$\frac{m_o}{\sqrt{1-(\frac{v}{c})^2}}$.

Thus, as the energy of the particle increases, there is a consequent increase in relativistic mass. This increase in relativistic mass becomes important only when the velocity increases above half the speed of light.

There are different types of particle accelerators by depending on shapes and sizes, the accelerators principle, construction, working, advantage and disadvantage of particle accelerators.

3.1 Van De Graaf Generator

This device is one of the simplest and most effective electrostatic accelerators. It uses a moving belt to carry charge to the inside of a hollow conductor supported on an insulating stand [16].

i. Van De Graaf Generator Principle

✓Van de Graff generator uses two principles of electrostatics. The electric discharge takes place in air or gases at pointed conductors readily. This phenomenon is known as corona discharge.

a. sharp pointed surfaces have large charge densities, that is

$$\sigma = \frac{q}{4\pi r^2} \tag{3.1}$$

For sharp points, r goes to zero and hence theoretically the charge density goes to infinity.

b. If small conducting charged shell of radius r_1, is located inside a charged and conducting shell of radius r_2, then the charge q will move from shell A to shell B

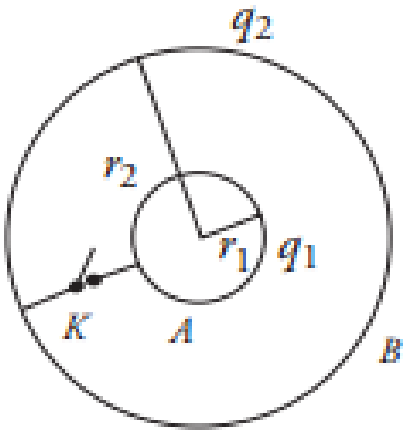

Figure 3.1: Demonstration of charge on hollow conductor.

if both the shells are connected to each other with key K (Fig. 3.1). Hence, the charge tends to move to outer the surface of spherical shell and does not reside inside the conductor. This leads to increase of the potential of outer surface. In actual practice the maximum potential on the outer shell does not go infinite because their is electric breakdown of air which surrounds the shell.

ii. Van De Graff Generator Construction

Two combs C_1 and C_2 are provided with sharp point ends (Fig. 3.2). C_1 is maintained at 5 - 20 kV with respect to ground. S is large hollow sphere that is mounted on two pillars D_1 and D_2. There are two frictionless pulleys P_1 and P_2 over which a well-insulated belt (B) passes over. C_1 is spray comb and C_2 is collector comb. There is discharge tube I which contains positive ions to be accelerated so that they can hit the target (T). The discharge tube is made up of porcelain glass. The discharge tube is highly evacuated in order to avoid any discharge inside the tube. The whole apparatus is inside gas tight steel chamber W. Their could be methane, freon (CCl_2F_2), air, or nitrogen inside the chamber.

iii. Working of Van De Graff Generator

Electric motor M makes a well-insulated belt B rotate over two pulleys P_1 and P_2. Metallic comb C_1 (Spray comb) is charged to high positive potential. Due to corona

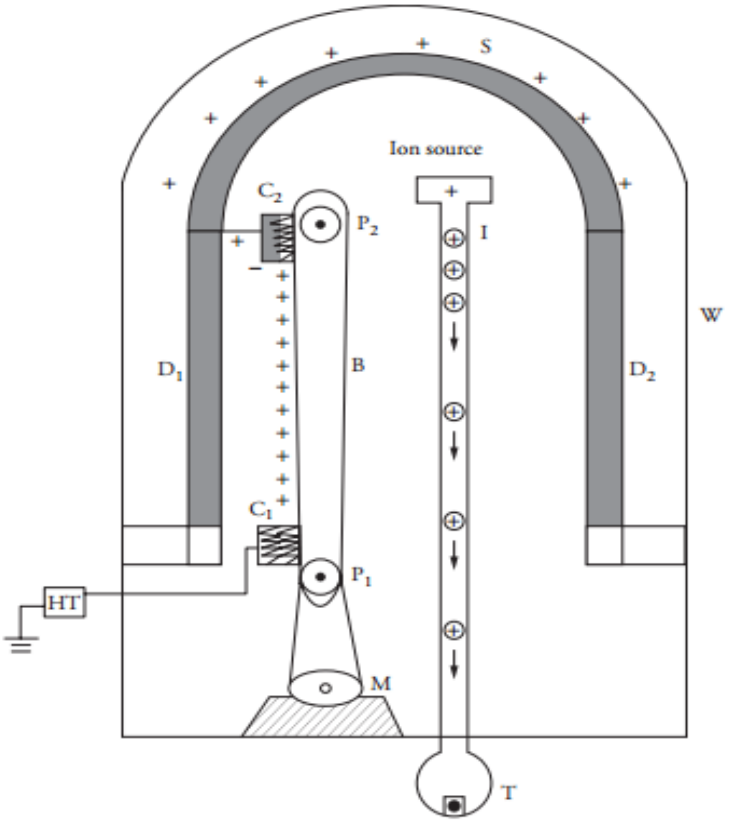

Figure 3.2: Schematic sketch of Van de Graaff Generator.

discharge action on its sharp points, the spray comb C_1 gives its positive charge to belt. The moving belt carries the charge to collector comb C_2. Due to induction, negative charge appears on the pointed ends of the comb and in turn positive charge builds up at the base of the C_2 comb. This charge gets transferred to the outer shell S. As the belt moves continuously, hence the charge on outer shell gets accumulated, which is turn raises the potential of outer shell as follows: If q is charge accumulated over a spherical shell of radius r, then potential (V) is:

$$V = \frac{q}{4\pi\varepsilon_o r} \tag{3.2}$$

While the charge continues to increase on the spherical shell, the ionization leakage also increases. Hence, the leakage is prevented by steel tank W. The charged particles inside the discharge tube T are at high potential. They get accelerated downward and hit the

target after coming out of discharge tube.

Mathematically: Capacity C for spherical shell = $4\pi\varepsilon_o r$ if r is the radius of spherical shell. Hence, potential:

$$V = \frac{q}{C} \tag{3.3}$$

Rate at which potential is build up on the shell is given by the following equation:

$$\frac{dV}{dt} = \frac{1}{C}\frac{dq}{dt} = \frac{i}{C} \tag{3.4}$$

where i is charging current that is usually composed of many components as follows:

$$i = i_p + i_l + i_s + i_c \tag{3.5}$$

where i_p=current due to positive ion source.

i_l= leakage current along the discharge tube.

i_s=is the current due to stray or secondary electrons that strike the wall.

i_c=current due to breakdown condition as a result of excess potential at surfaces. It is also known as corona current.

If the S is made negative, then electrons can also be accelerated. These days, particles up to 20 MeV energy can be produced using Van de Graaff generator.

iv. Advantages of Van De Graff Generator

✓ It is simple to use.

✓ It is used in metallic painting, photocopy, electrostatic dust precipitator.

✓ Fuel efficient.

✓ Financial benefit.

✓ Good for the environment.

✓ Built from light materials.

✓ Continuous source of energy.

✓ Easy replacement of equipment.

✓ Unaffected by external magnetic fields.

v. Disadvantages of Van De Graff Generator

- The potential can be increased further than normal condition.
- It can produce lightening, electric shock, fire in fuel tanks.
- Less power generation.
- Initial investment is high.
- Requires better way to store energy.
- Cannot differentiate between collision and touch.
- Does not respond to weight.
- Depends on the condition of sensor surface.
- Cannot be used for truly static measurement [16].

3.2 Cockcroft- Walton Voltage Multiplier

The Cockcroft Walton machine is used as voltage multiplier circuit to get high potential difference.

i. Cockcroft - Walton principle

According to the principle of Cockcroft Walton machine, it states that a number of capacitors connected in parallel are charged and then discharged in series when the voltage across them is equal to the sum of voltages on every individual capacitor [17].

ii. Cockcroft - Walton construction

Number of capacitors $C_1, C_2, ..., C_n$ having equal capacitance are joined together with rectifiers $R_1, R_2, ..., R_n$. With the help of rectifiers, the current can pass only in one direction (Fig. 3.3). A step-up transformer T is used. With the help of step-up transformer, an output voltage of up to 100 keV can be obtained. X is earthed in order to keep the potential at a fixed value. Transformer helps in charging the parallel plate capacitors and then discharged in series. This discharge voltage is further used to accelerate the particles [17].

iii. Cockcroft - Walton Working principle

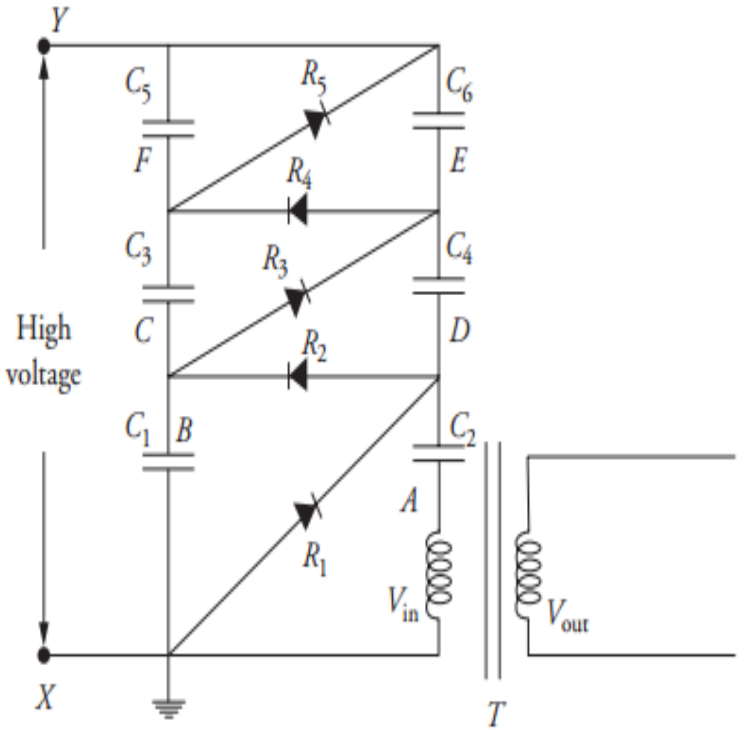

Figure 3.3: Schematic sketch of Cockcroft Walton circuit.

Alternating current is applied across the primary coil of transformer. During the negative half cycle, A becomes negative and with respect to point X and the rectifier R_1 gets forward biased and capacitor C_2 is charged to potential V_{in} . There still exists potential difference between point X and A. The potential difference between X and A is $+V_{in}$ after the capacitor is charged. Before charging of capacitor, the potential difference was $-V_{in}$. During the positive half cycle, A becomes positive and hence R_1 gets reverse biased due to which the rectifier do not conduct. Therefore, during negative half cycle, the potential difference between A and C becomes zero and during positive half cycle, the potential difference between A and C is $2V_{in}$. When R_2 is conducting then C_1 is charged. These cycles are repeated until the capacitors are charged, and hence the potential difference along the capacitor becomes $2V_{in}$. Hence, potential difference between X and F becomes $4V_{in}$. If two rectifiers and two capacitors are joined, then this arrangement is known as voltage doubler. This arrangement is also known as cascade

multiplier as voltage is multiplied in the arrangement [17].

If n capacitors are connected via n rectifiers with V_{in} as input voltage, then the output is given as follows:

$$V_{out} = nV_{in} - \frac{1}{fC}[n^3 + \frac{9}{4}n^2 + \frac{n}{2}] \tag{3.6}$$

where; f is frequency of transformer, C is capacitance of every capacitor.

The ripple voltage is:

$$\pm V_{out} = \frac{In}{16fC}(n+2) \tag{3.7}$$

where, I is current.

C cannot be kept very large. But if we increase the frequency of source, then the ripple voltage increases. High voltage is obtained between X and Y, which is used to accelerate the charged particles. Using this device, particles cannot be accelerated above 5 MeV energy. The capacitors used should be able to withstand high tension. There are many chances of insulation breakdown for this device [18].

iv. Advantage of Cockcroft - Walton machine

✓ It is quite popular for relatively low powered particle accelerators for injecting into another accelerator, particularly for heavy ions.

✓ It is probably the most popular means of generating high voltages at low currents at low cost.

✓ It requires relatively low cost components and being easy to insulate.

✓ It also inherently produces a series of stepped voltages which is useful in some forms of particle accelerators, and for biasing photo-multiplier tube dynodes.

v. Disadvantage of Cockcroft - Walton machine

• It has very poor voltage regulation, that is, the voltage drops rapidly as a function the output current.

3.3 Cyclotron

Cyclotron is a device used to accelerate positively charged particles such as ${}_2He^4$, protons, and deuterons. These charged particles are further used for the purpose of nuclear disintegrations.

i. Basic Principle of Cyclotron

It is based on the principle of cross fields, that is, electric and magnetic field should be perpendicular to each other. When a positively charged particle is moved again and again in high-frequency electric field and perpendicular magnetic field, then the particles are accelerated to the desired energy level [1].

ii. Construction of Cyclotron

It consists of two hollow metallic chambers D_1 and D_2 which are D-shaped and known as dees as shown in (Fig. 3.4). These two dees are separated by small gap between which a positive charge is placed. These dees are connected to high-frequency oscillator that is

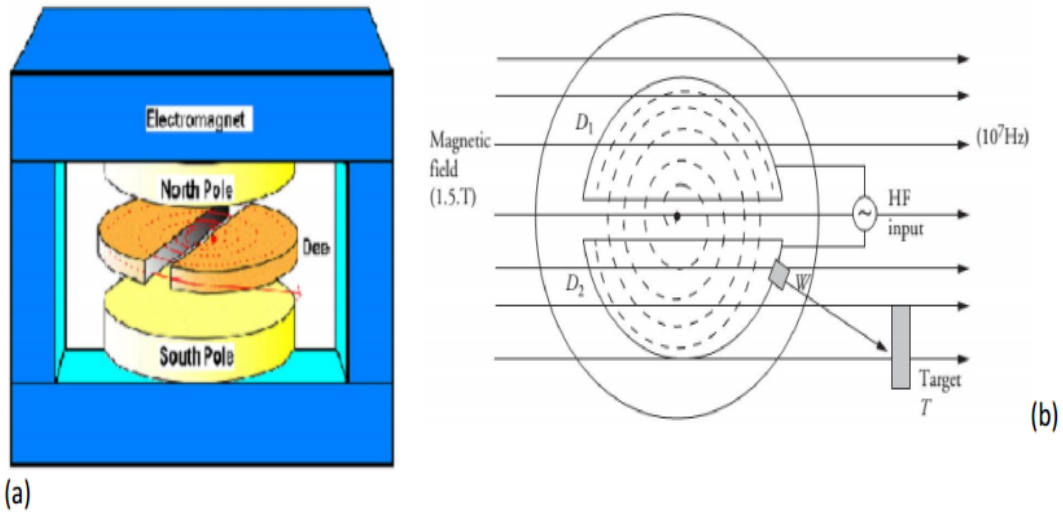

Figure 3.4: Schematic sketch of cyclotron.

of magnitude 10^7 Hz. This high frequency oscillator provides high electric field along the gap of dees. The dees D_1 and D_2 are enclosed inside a box chamber, which is almost at 10^{-3} mm of mercury pressure. These dees are inside the poles of strong electromagnet,

which provide perpendicular magnetic field of almost 1.5 T.

iii. Working of cyclotron

If dee D_1 is at positive potential and a positive particle is present inside the gap of dees, then the particle will get accelerated toward the negative potential dee D_2. Inside the hollow dee D_2, there is no electric field. Only magnetic field will act on the particles that are inside dee D_2. This magnetic field provides necessary centripetal force for a particle to move in circular path, which is given as follows:

Let m be the mass of particle to be accelerated, B is the magnetic field, v is the velocity of particle, q is the charge of particle, and r is the radius of semicircular path traversed by particle. The Lorentz force acting on particle, when the magnetic field is perpendicular to its motion is given by the following equation:

$$\overrightarrow{F} = q(\overrightarrow{v} \times \overrightarrow{B}) = qvBsin90^0 = qvB \tag{3.8}$$

This force provides centripetal force, hence

$$qvB = \frac{mv^2}{r} \Rightarrow r = \frac{mv}{qB} \tag{3.9}$$

The particle will traverse a semicircular path of radius r inside dee D_2 and will eventually return to the gap between the dees at the time when polarities of dees are reversed; that is, now the dee D_1 is at negative potential and dee D_2 is at positive potential. The time required by particle to complete one semicircle is given by the following equation:

$$t = \frac{1}{2}(\frac{2\pi r}{v}) = \frac{\pi r}{v} = \frac{\pi}{v}(\frac{mv}{qB}) = \frac{m\pi}{qB} \tag{3.10}$$

Now, the particle will enter dee D_1 and again a semicircle is traversed. As can be noted from Equation (3.10), the time taken to reach in between the dees is independent of the radius. Hence, the particle reaches in between the gap after sometime. This process is repeated till the particle reaches the periphery of the dee. Then the particle is deflected by a plate, and it comes out through a window to hit the target. The cyclotron frequency is given by following expression:

Let T be the time period taken by charged particle, hence

$$T = 2t = \frac{2\pi m}{qB} \tag{3.11}$$

Hence, the frequency of revolution is reciprocal of period it is given by the following equation:

$$f = \frac{1}{T} = \frac{Bq}{2\pi m} \tag{3.12}$$

this frequency is also known as magnetic resonance frequency

Equation (3.12) gives the cyclotron frequency. The angular frequency for cyclotron is given by the following equation:

$$\omega = 2\pi f = \frac{Bq}{m} \tag{3.13}$$

Similarly, the maximum energy gained by the particles is given by the following equation:

$$E_k = \frac{1}{2}mv^2 = \frac{1}{2}m(\frac{qBr}{m})^2 = \frac{q^2B^2r^2}{2m} \tag{3.14}$$

The maximum energy is gained by the particle, when it reaches the periphery of dees, and it is given by the following equation:

$$E_{max} = \frac{q^2B^2}{2m}r_{max}^2 \tag{3.15}$$

Cyclotron can accelerate the particles through electric field only and not by magnetic field. Magnetic field only deflects the semicircular path for the particles inside the dees. Cyclotron cannot handle/accelerate negative as well as neutral particles. Electrons cannot be accelerated on account of their smaller masses. Due to small mass of electrons, they attain very large energy in small intervals of time, and hence go out of step very quickly. Ions cannot have large velocities comparable to velocity of light inside the cyclotron, because as per following relativistic relation [5]:

$$m = \frac{m_o}{\sqrt{1 - (\frac{v}{c})^2}} \tag{3.16}$$

where m_o is rest mass.

Hence, when $v \approx c$, then the particle is of infinite mass. Hence ω becomes

$$\omega = \frac{Bq}{m_o}[1 - \frac{v^2}{c^2}]^{1/2} \tag{3.17}$$

Hence, when v increases, then ω decreases and ion will spend more time to traverse the semicircular path inside the dee. This will lead to late arrival of particle inside the gap and hence cannot be accelerated due to time lag. This is also known as lack of resonance. Hence, the factor $B(1 - \frac{v^2}{c^2})^{1/2}$ should be kept constant. Hence, the magnetic field should be increased such that the product remains unchanged.

iv. Advantage of cyclotron

✓ Particles in a circular accelerator go round many times getting multiple kicks of energy.

✓ Higher energies can be achieved using the same voltage but the metal dees do not need to be of great length Ernest Lawrence achieved a proton energy of 80 keV using

a cyclotron with a diameter of 11 cm.

✓ The particles go around many times, so if two oppositely charged particles are accelerated in opposite directions, there are many opportunities for collisions. Colliding beam experiments also have the highest possible collision energy.

v. Disadvantage of cyclotron

• Einsteins theory of special relativity states that as objects get faster, they get heavier. Therefore if the particles travel close to the speed of light, their mass will increase. As r = mv/Bq, an increase in mass, will cause the particle to have a circular path of a larger radius, therefore it will take longer to reach the gap, making it out of step with the alternating potential difference.

• The use of magnets has cost implications.

• If two particles of the same mass are accelerated in opposite directions to the same

speed, the total momentum before the collision will equal zero, and since $E_k = p^2/2m$, there will be no energy left over for the creation of new particles.

3.4 Linear Accelerator (Linac)

In linear accelerators, the particles are charged in steady steps. Alvarez et al. in 1945 accelerated the protons to 32 MeV using Linacs.

i. Linear accelerator principle

The linear accelerator works on the principle that a charged particles get accelerated to a very high energy, if passed through some potential difference repeatedly. Moreover, no electric field exists inside hollow conductor moves with uniform velocity [4].

ii. Linear accelerator construction

A linear accelerator consists of cylindrical metallic tubes 1,2,..., n (Fig. 3.5).

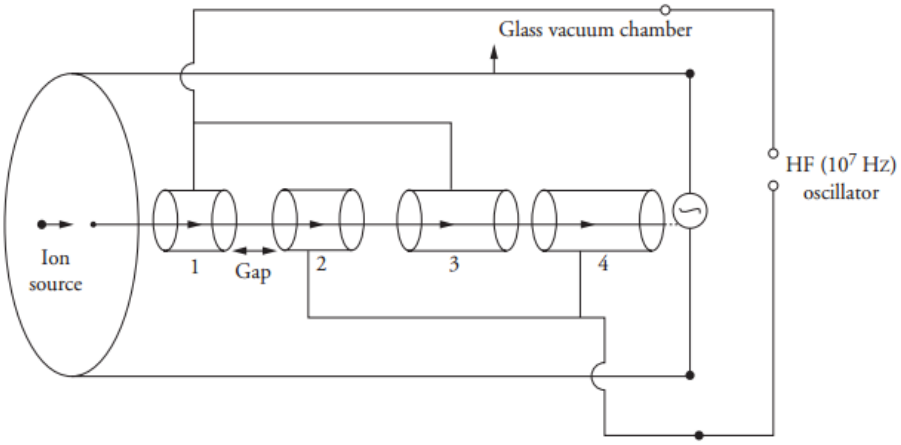

Figure 3.5: Schematic sketch of linear accelerator.

Their axes are along the straight line. The length of cylinders is increasing, that is, the first cylinder is shortest, second is of larger in length than the first, third cylinder is larger in length than the second, and so on. The odd cylinders are connected to one terminal and even cylinders are connected to other terminal. Both terminals are connected to high-frequency oscillator of almost 10^7 Hz frequency. These cylinders are inside evacuated glass chamber. When one set of cylinders get negative, then the second

set of cylinders is positive. In next half-cycle, the polarity is reversed and the beam of ions enter the tube along the axis.

iii. Working Linear accelerator

When the ions enter the tube, then the ions are accelerated only after crossing the gap between the cylinders. Each tube has constant potential; hence, electrons cannot be accelerated within these tubes. If positive charge q enters the accelerator, such that first cylinder is positive, then the second will be negative, The positive ion will get accelerated in between the gap of first and second cylinder. The accelerated ion will now travel through second cylinder with seed faster than it had during traveling through first cylinder. As the length of second cylinder is longer; hence, the ion will reach in the same time to reach in between the gap between second and third cylinder. In the meantime, the polarity gets reversed, that is, the second cylinder will become positive and third will become negative. The ion will again get accelerated in between the gap between second and third cylinder. To keep the ions in phase, the cylinders are made longer in order to compensate for the increasing speed of electrons, that is,

$$t = \frac{l}{v} = constant \tag{3.18}$$

where, t - is time it takes, l - is cylindrical length and v - is speed of the ion.

Hence, after passing through every gap, the ion gets accelerated. While passing the tube (which is at constant potential), it moves at constant velocity.

Theoretically, we can conclude as follows: Let charge q have mass m and V is the potential difference between successive tubes. The velocity of charge while entering n^{th} cylinder is v_n, then the kinetic energy of ion is $\frac{1}{2}mv_n^2$. The energy picked up by ion after passing through cylinder is qV. For n such gaps, the energy is nqV. Hence,

$$nqV = \frac{1}{2}mv_n^2 \Rightarrow v_n = \sqrt{\frac{2nqV}{m}} \tag{3.19}$$

This equation fails for relativistic velocities, that is, when $v \approx c$. The velocity of ions depends on $\sqrt{n}$. For example, for the third cylinder, the velocity will become $\sqrt{3}$. During

half cycle, the ions travel the distance equal to the length of tube and gap between the cylinders. Hence,

$$L = v_n \frac{T}{2} = \frac{v_n}{2f} \tag{3.20}$$

where f-is frequency, L is length of the tube.

Putting equation (3.19) in equation (3.20)

$$L = \frac{1}{2f}\sqrt{\frac{2nqV}{m}} \Rightarrow L = T\sqrt{\frac{nqV}{2m}} \tag{3.21}$$

Hence, L varies as $\sqrt{n}$ and velocity v_n also varies as $\sqrt{n}$, which implies phase stability. Earlier linear accelerators were used to accelerate the protons only, but these days electrons can also be accelerated. Linacs provide a very well - collimated beam of charged particles. Their drawback is their large length, due to which more number of cylinders are required.

iv. Advantage of linear accelerator

✓ It makes use of an alternating voltage, which means it can easily be stepped up and down using transformers.

✓ It is easier and cheaper to build since it does not require magnets to produce a centripetal force by interacting with the charged particle.

✓ If it is used in fixed target experiments, the likelihood of collisions is far greater.

✓ It does not require the use of high voltages which could cause sparks to jump between the electrodes.

v. Disadvantage of linear accelerator

• The kinetic energy transferred to the particles is limited since particles can only travel through the accelerating sections once. In order for high energies to be obtained the machines must be made longer and longer and this has cost implications.

• If the linear accelerator is used to accelerate particles at a fixed target,only the accelerating particle has momentum and kinetic energy. As momentum is always conserved the total momentum cannot be zero before the collision, so the created

particles must be moving. This means energy is used up as the kinetic energy of the new particles, rather than the energy used to create the new particles mass.

- It is heavy and requires very large operating area.
- Very expensive to manufacture, repair and maintain.
- Lower image resolution due to a large focal spot size.
- Only suitable for stationary applications. Not designed for portable use.
- Less efficient power conversion.

3.5 Betatron

The betatron is a circular accelerator used to accelerate negatively charged particles.

i. Betatron Principle

Betatron works on the principle of electromagnetic induction. According to it, an alternating current in the primary coil of a transformer induces a similar current in secondary coil. The primary current produces a magnetic field which induces potential in the secondary windings. We can consider the secondary coil of transformer to be moving cloud of electrons in circular orbit due to magnetic field in doughnut-shaped chamber.

ii. Betatron Construction

A betatron consists of electromagnet pole pieces. This electromagnet works of high

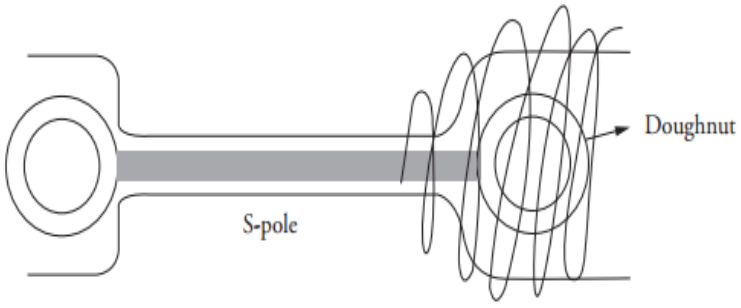

Figure 3.6: Pole pieces for the betatron.

voltage A.C. input. The doughnut chambers are arranged in the pole pieces as shown

in (Fig. 3.6).

The electromagnet produces strong magnetic field at the center of doughnut vacuum chamber (Fig. 3.7). The electron revolves in circular orbit in the doughnut-shaped vacuum chamber. The magnetic flux ϕ associated with orbit changes continuously changes

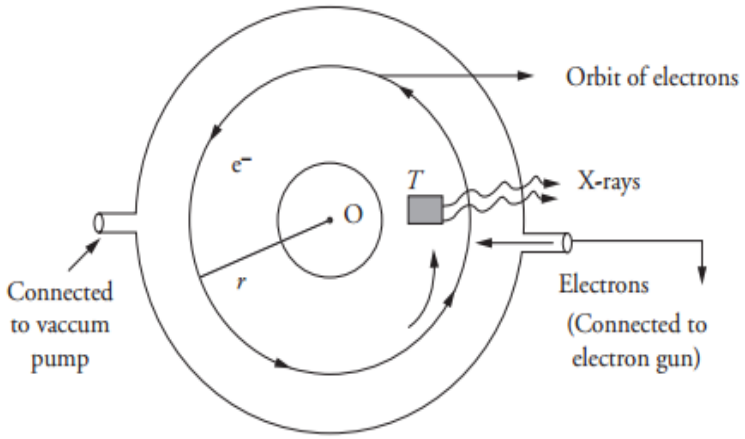

Figure 3.7: Schematic diagram of betatron chamber.

with time. Hence, electrons gain energy by the process of magnetic induction. In cyclotron, the magnetic field always increases the radius of orbiting particle. But in betatron, the transverse magnetic field makes the electrons move in constant orbit. The magnetic field provides the necessary centripetal force, so that electrons move in circular orbit. The magnetic lines of force should be convex outwardly for proper magnetic focusing.

The doughnut chamber is also coated with a silver layer from inside. There should be no accumulation of electrons. Moreover, the generation of eddy currents should be minimized by keeping the conductivity of layer to be very small. The eddy currents hinder the operating condition of betatron as they tend to distort the magnetic condition [5].

iii. Working of Betatron

An electron gun is used to inject the electrons into vacuum chamber. The electron gun consists of a heating filament as electron emitter. The injection of electrons is done

when the magnetic field is rising during the first quarter of the alternating cycle as shown in (Fig. 3.8).

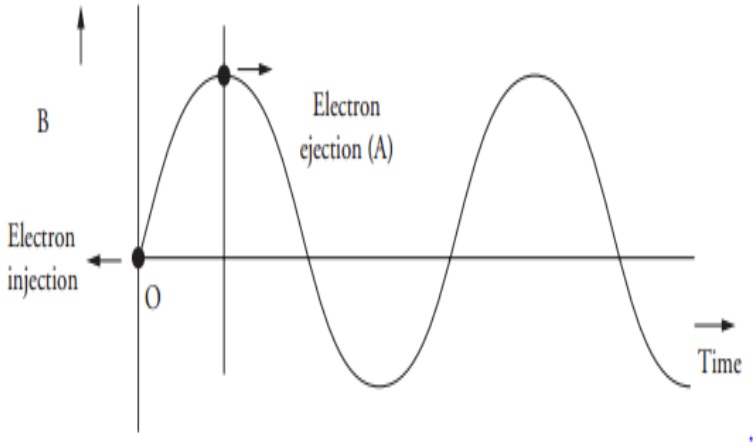

Figure 3.8: The alternating cycle of magnetic field demonstrating the injection and ejection of electrons.

The electrons get accelerated during the rising magnetic field due to increasing potential within the doughnut. Even after increasing kinetic energy of electrons, the electrons orbit in the same orbit of radius r. Then the magnetic field starts decreasing after passing through a maximum. Then the electrons start decelerating as the direction of e.m.f. starts getting reversed. To avoid this effect, the electrons are removed at peak magnitude of magnetic field (point A). These ejected high energy electrons can strike target T to produce X - rays that emerge out of the apparatus. To remove electrons from the orbit, a current of large amplitude is sent through auxiliary coil that abruptly changes the magnetic field. The theory behind the working of betatron can be demonstrated using Faradays law. According to Faradays law of electromagnetic induction, the induced e.m.f. due to changing current or magnetic flux linked with a coil is given by the following equation:

$$\varepsilon_{ind.} = \frac{d\phi_B}{dt} \tag{3.22}$$

ϕ_B is the magnetic flux which is perpendicular to the plane of circuit.

During one revolution, the work done on an electron is given by the following equation:

$$W = q\frac{d\phi_B}{dt} \tag{3.23}$$

Where q is the charge of electron, the force acting on an electron during one revolution is given by the following equation:

$$F = \frac{W}{S} \tag{3.24}$$

where, S - is distance traveled during one revolution

$$\Rightarrow F = \frac{q\frac{d\phi_B}{dt}}{2\pi r} \tag{3.25}$$

We also know that when magnetic field is acting on the charged particle is perpendicular to velocity of electrons, then it gives rise to Lorentz force: F = qvB. This Lorentz force provides the required centripetal force as follows:

$$Bqv = \frac{mv^2}{r} \tag{3.26}$$

$$\Rightarrow P = Bqr \tag{3.27}$$

where, P is momentum of the electron

According to Newtons second law of motion, force is equal to the rate of change of momentum is given by the following equation:

$$F = \frac{dP}{dt} = \frac{d}{dt}Bqr \tag{3.28}$$

$$\Rightarrow F = qr\frac{dB}{dt} \tag{3.29}$$

Now, from equations (3.25) and (3.29)

$$qr\frac{dB}{dt} = \frac{qd\phi_B/dt}{2\pi r} \tag{3.30}$$

$$\frac{d\phi_B}{dt} = 2\pi r^2 \frac{dB}{dt} \tag{3.31}$$

$$\frac{d\phi_B}{dt} = 2\frac{d}{dt}(\pi r^2 B) \tag{3.32}$$

The above equation is known as flux condition. This condition states that the flux ϕ_B linked with a coil must change at a rate twice the rate if the magnetic field is uniform throughout the orbit in given time interval. This relation holds good in the relativistic and non relativistic regime. The above equation can be written as:

$$2\frac{d}{dt}(\pi R^2 B) = \frac{d}{dt}(\pi R^2 B_{av.}) \tag{3.33}$$

$$B_{av.} = 2B \tag{3.34}$$

This equation is known as betatron condition. Hence, the magnetic field must be shaped such that the average magnetic field ($B_{av.}$) over the total space enclosed by orbit is equal to twice the magnetic field at orbit. The betatron usually requires a source of 60 Hz. Betatron has very bulky electromagnet.

iv. Advantage of betatron

✓ It designed for portable and stationary applications.

✓ Light weight and compact.

✓ Cheaper to manufacture, repair and maintain.

✓ Higher image resolution due to smaller focal spot size.

✓ It can be used as a source of energetic X - rays or gamma rays.

✓ It is possible solar flare mechanism.

✓ It is more efficient power conversion than LINAC.

✓ It provides high energy beam electrons of about 300 MeV.

✓ High energy electrons can be used in particle physics.

✓ The X - rays produced with the help of betatron can be used in industrial and medical fields.

v. Disadvantage of betatron

• The maximum energy that a betatron can impart is limited by the strength of the magnetic field due to the saturation of iron and by practical size of the magnet core.

• The acceleration of particles becomes very difficult after achieving the relativistic speeds.

• Electrons are negatively charged. After their acceleration, the electrons always radiate energy in the form of electromagnetic waves. The kinetic energy of electrons is also fixed when the energy lost by electrons in the form of electromagnetic radiations becomes equal to energy gained by electrons during their acceleration, then there is no further rise in the kinetic energy of electrons.

3.6 Synchrotron

At very high energies, the particles travel close to the speed of light and their motion is now described by relativistic equations and their travel time is no longer the same for each semi-circle. To overcome this, careful synchronization is needed to make the electrodes change their polarity as the particles pass through each acceleration section. The magnetic field is increased to keep the moving particles in a moving circle of constant radius.

3.6.1 Electron synchrotron

i. Electron Synchrotron construction

Like betatron, synchrotron also uses doughnut-shaped vacuum chamber in A.C. magnetic field. The weight of the magnet is considerably reduced in synchrotron. (Fig. 3.9) shows the vacuum chamber inside C - shaped magnet.

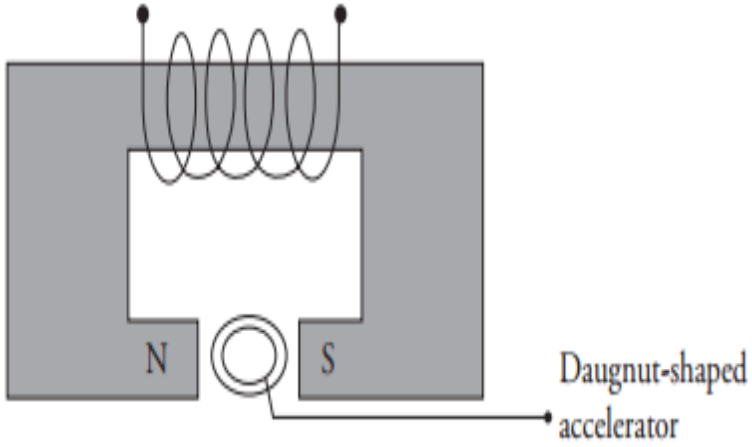

Figure 3.9: The ring magnet.

Like other accelerators, the magnetic focusing is required, that is, the pole faces are constructed to provide maximum field at center. The vacuum chamber is coated with silver from inside to avoid any hindrance in the operation of synchrotron due to eddy current (Fig. 3.10).

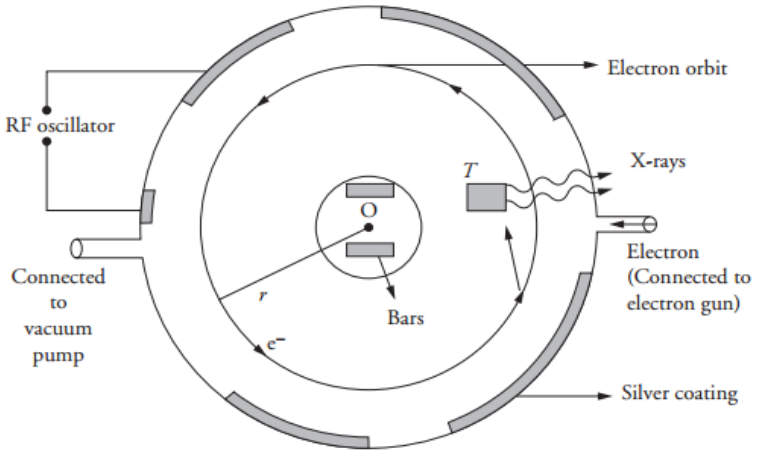

Figure 3.10: The electron synchrotron

Across, this gap radio frequency oscillator is used during a proper time. When radio-frequency is applied across the gaps, then the electrons get accelerated every time it crosses the gap (also known as resonance cavity). There are steel bars inside the doughnut, which gets supersaturated easily. These are provided so that the variation of magnetic field takes place only for electron orbit. These bars are of high permeability.

ii. Working of Electron Synchrotron

With the help of electron gun, electrons are injected into the vacuum chamber with energy range of up to 100 keV. After the electrons are accelerated to high energy, then the electrons may attain velocity comparable to that of light. The bars play a very important role. Once the steel bars get saturated, they no longer obey Faradays law of electromagnetic induction. Hence, no induced e.m.f. is produced. Hence, it will no longer works as betatron. Now, the chamber works in synchrotron mechanism. As the electron gains relativistic speed, the mass of electron becomes relativistic and magnetic field also increases. With proper adjustment of frequency at which resonator operates, all the electrons can be kept in phase. The electrons gain energy after every revolution. The magnetic field and orbit radius decide the energy of electrons [19].

After the electrons gain maximum energy, radio-frequency oscillator is turned off and larger current is sent through auxiliary coils so that the electrons change their orbit radius due to unstable magnetic flux. These electrons then strike the target from the inner edge of doughnut chamber. The target releases highly energetic X-rays, when electrons strike the target. The electrons can attain energy up to 330 MeV by synchrotron action and 7−8 MeV by betatron action. The limit of energy can further be increased if the synchrotron is divided into race-type chamber tracks. The energy of electron with rest mass m_o is given by the following equation:

$$E = \sqrt{P^2c^2 + m_o^2c^4} \tag{3.35}$$

As momentum P=$\frac{E_k}{c}$, and also P=qBr, then qBr=$\frac{E}{c}$

$$E = qBrc \tag{3.36}$$

Hence, if we increase the magnetic field, then the energy also increases. We can also obtain the frequency of revolution (when the electron is at relativistic speeds) as:

$$f = \frac{1}{T} = \frac{1}{2\pi\frac{r}{c}} \Rightarrow f = \frac{c}{2\pi r} \tag{3.37}$$

Synchrotrons are high energy accelerating machines whereas cyclotron and betatron usually are low energy accelerating machines. If certain radiation losses occur, then the kinetic energy may drop as per Schwingers formula:

$$E_{rad} = \frac{q^2}{3\varepsilon_o r}[\frac{m}{m_o}]^4 \tag{3.38}$$

iii. Advantages of electron synchrotron

✓ Easier to produce high-energy photons (hard X - rays).

✓ Better beam lifetime.

✓ Easier to achieve higher current without encountering beam instabilities.

✓ High energy electrons to penetrate deeper into matter.

✓ Small wavelengths of electrons permit the studying of tiny features, e.g. bonds in molecules; nanoscale objects.

iv. Disadvantages electron synchrotron

• Higher energy beams have larger emittances (reduced brightness) for a given lattice.

• Stronger (more expensive) magnets are needed to steer and focus the beam.

• Larger radio frequency system needed to replace synchrotron radiation energy losses.

3.6.2 Proton-synchrotron

Protonsynchrotron can accelerate Protons up to 10 GeV energy. It can be used to accelerate deuterons, alpha particles in addition to protons. With the help of cyclotron, protons can be accelerated up to 10 MeV of energy. But in order to accelerate the particles beyond this value, the proton synchrotron was invented. Using protonsynchrotron, protons can be accelerated up to 10 GeV energy.

i. proton-synchrotron construction

The doughnut vacuum chamber for synchrotron is made up of steel (Fig. 3.11). There are four quadrants that produce magnetic field perpendicular to vacuum chamber.

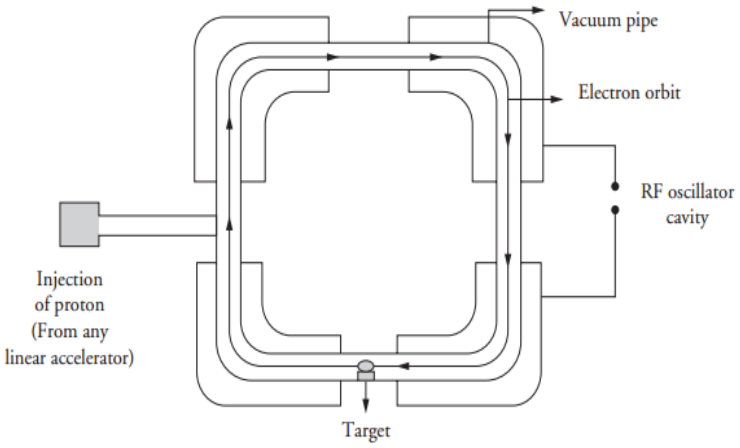

Figure 3.11: Schematic design of proton synchrotron

The magnetic field increases with time, but the radius of positive charged particle is maintained constant. The doughnut chamber is kept inside the ring as shown in (Fig. 3.12).

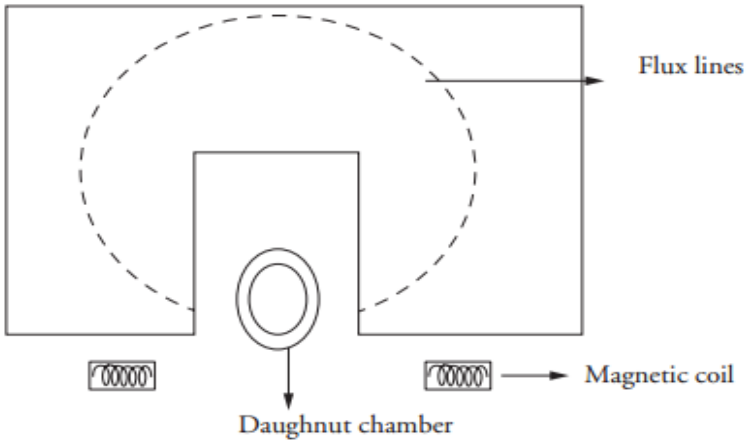

Figure 3.12: Magnet used in proton synchrotron.

ii. proton-synchrotron working principle

Using a linear accelerator such as Van de Graaff generator, the protons are accelerated toward the doughnut chamber. Hence, initially the positive particle such as proton can be accelerated up to 10 MeV. These particles are injected when the magnetic field is small. These electrons then come under the influence of radio frequency oscillator. Moreover, the magnetic field is also increased to keep the electrons in circular orbit of

constant radius. In order to avoid any losses due to scattering, the pressure inside the doughnut tube is kept almost 10^{-6} mm of Hg. As proton completes its revolution, it almost gains an impulse of 1 kV/turn, which increases its energy as well as frequency. Hence to maintain the phase stability the frequency of radio frequency oscillator is also increased in order to synchronize it with the frequency of proton [19]. The range up to which protons can be accelerated is higher than the range of electrons. Hence for proton synchrotron, the radio-frequency adjustments are made quickly. The protons of very high energy ($\approx 10BeV$) can be obtained using proton synchrotron. This could be attributed to the fact that the radiation losses for protons are smaller than the losses for electron. When the protons are accelerated to maximum energy levels, then the radio-frequency is distorted, so that the radius of orbit changes. After the proton gets out of its track, it will strike the target. Theoretically, we could write down the frequency of revolution of positive particle to be:

$$f = \frac{(qBc^2)(2\pi r)}{2\pi(E_k + m_o c^2)(2\pi r_o + 4l)} \tag{3.39}$$

where,

$r_o \rightarrow$ radius of circular section.

$l \rightarrow$ section length.

$E_k \rightarrow$ kinetic energy.

$B \rightarrow$ Magnetic field.

When synchrotron is used to accelerate particles up to 6 BeV, it is also known as betatron. For the proton acceleration of up to 30 GeV, cosmotrons are used. Using cosmotrons, nuclear reactions involving energy of cosmic rays are studied.

iii. Advantage of proton synchrotron

✓ It is used in cancer treatment.

✓ Used in drug discovery and research.

iv. Disadvantage of proton synchrotron

- Less penetrating power.
- It is highly costive for building.

3.7 Synchrocyclotron

Synchrocyclotron solves the problem of loss of resonance. It is also known as frequency modulated cyclotrons because the frequency is varied.

i. construction of synchrocyclotron

Synchrocyclotron consists of only one dee, which is placed inside the poles of an electromagnet as shown in (Fig. 3.13). The pole pieces should be shaped to provide magnetic focusing, that is, field decreases outward from the center. The pressure inside the chamber is kept to be 10^{-6} cm of Hg. High potential is applied across the dee. As

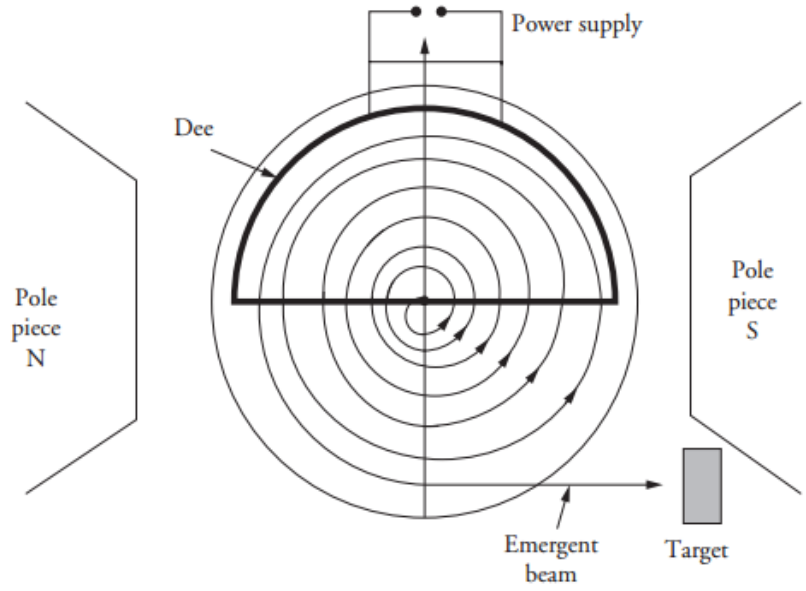

Figure 3.13: Schematic of synchrocyclotron

compared to cyclotron, the peak value of voltage is quite low $\approx$ 25 kV. The ions make almost 10^5 revolutions inside the dee. There is only one dee inside the vacuum chamber, so that their can be enough space for the ion source and target. Like cyclotron, the path

of the particle is spiral and the ion source is also similar. But still there are some differences; that is for cyclotron, the magnetic field is constant, whereas for synchrocyclotron it decreases. Cyclotron also keeps the frequency to be constant, whereas for synchrocyclotron it varies. The synchrocyclotron may use the magnetic field, which decreases from 1.5 to 1.43 T (Berkley). The Berkley synchrocyclotron is of 400 tons producing the α-particles of almost 380 MeV and deuterons of 190 MeV. The oscillator frequency varies from 11.5 to 9.8 MHz. The frequency is kept at 11.5 MHz during the injection stage; whereas during the ejection stage, it is kept to be 9.8 MHz. The resonance of the ion and the radio frequency field is usually maintained by decreasing the frequency. In synchrocyclotron, the particle completes 10^5 revolutions before ejection. The frequency of revolution for ions is determined from: v = $r\omega$ and mv=Bqr.

$$\Rightarrow \omega = \frac{Bq}{m} \tag{3.40}$$

By multiplying both denominator and nominator by c^2 , then:

$$\omega = \frac{Bqc^2}{mc^2} = \frac{Bqc^2}{E} \tag{3.41}$$

$$\Rightarrow \omega = \frac{Bqc^2}{E_k + m_o c^2} \tag{3.42}$$

where, E_{total}= E_k+rest mass energy.

$$f = \frac{Bqc^2}{2\pi(E_k + m_o c^2)} \tag{3.43}$$

Using synchrocyclotron, the electrons cannot be accelerated as well as the output beam current is also very small.

ii. Advantage of synchrocyclotron

✓ There is no need to restrict the number of revolutions executed by the ion before its exit.

✓ The potential difference supplied between the dees can be kept smaller.

iii. Disadvantage of synchrocyclotron

• Only very small fraction of the ions leaving the source are captured in phase table orbits of maximum radius and energy so that the out put beam current is rendered weak, due to variation of frequency of oscillation voltage supply.

Generally, accelerators fall in two categories: electrostatic accelerators in which the particles are accelerated by constant potential difference and cyclic accelerators in which particles form closed path again and again.

The Van de Graaff generator is based on the principle of harp pointed surfaces and zero charge inside hollow conductor. The Cockcroft - Walton machine uses voltage multiplier circuits to get high potential difference. Cyclotron can accelerate the particles through electric field only. The purpose of magnetic field in cyclotron is to deflect the particles in semicircular path inside the dees.

The linear accelerators work on the principle that the particle gets accelerated during positive half cycle and retarded during negative half cycle under an electric field. Betatron is used to accelerate negative-charged particles, and it works on the principle of electromagnetic induction. Synchrotrons were introduced which used radio-frequency oscillators and ring-shaped magnet. The frequency of synchrocyclotron is not constant suchlike cyclotron.

Chapter 4

Applications of Particle Accelerators

In this chapter we describe some applications of particle accelerators. The particle accelerator is one of the most versatile instruments designed by physicists. From its inception, as the cathode ray tube by J.J. Thomson who used it to study the properties of the electron, to the present giant colliders, it is intimately associated with the major discoveries in of nuclear and particle physics.

Today it is widely used in nearly every field of physics from elementary particles to solid state. It is also an essential instrument in many other areas of research to study structures in chemistry and biology or to perform sensitive trace element analysis. Its range of application is being considerably extended by its capability of generating synchrotron radiation and spallation neutrons. Progress in nuclear and particle physics originated from studies with accelerators is now playing a major role in astrophysics and cosmology [19].

Industrial applications cover a broad range of techniques such as ion implantation in the semiconductor industry and the modification of surface properties of many materials.

Radiation is being used in a variety of processes to preserve food, sterilize toxic wastes or polymerize plastics. Activation methods with compact accelerator produced neutrons are applied in geophysics and are being developed for the detection of explosives and for the general purpose inspection of goods.

It is probably in medicine that accelerators have found their widest field of applications, either for isotope production for diagnostic or treatment purposes or for therapy with gamma rays, electrons and more recently with neutrons and heavy charged particles.

Particle accelerators play an important role in national security, including cargo inspection, stockpile stewardship and materials characterization.

Early applications of accelerators to inspect nuclear fuels used commercial low - energy electron linear accelerators to induce photo-fission reactions. These inspection technologies expanded to waste-drum investigation in the 1980s and eventually to cargo inspections. The invention of the free electron laser in the 1970s led to ever-higher-power electromagnetic radiation using high-energy electrons, of direct interest to security and defense applications, including the Navy's proposed application of free-electron laser technology to shipboard defense [13].

In the nearby future, accelerators could play a key role in power engineering. Studies of inertial confinement fusion by heavy ions are actively pursued in several countries. Accelerators are an essential ingredient to provide the additional heating needed for plasma ignition in magnetically confined tokomaks. A concept for large scale accelerator driven energy generation from Thorium has recently been proposed. Finally research is also going on to use accelerators to incinerate long-life nuclear waste (actinides) which could lead to an acceptable long term disposal solution. Some applications of particle accelerators are discussed below.

4.1 Research applications

a. Particle physics

The development of particle physics has been directly determined by the progress achieved in building accelerators of ever increasing energy. For examples the discovery of the antiproton at the Berkeley Bevatron in the mid-fifties, the two neutrinos with the

AGS(Alternating Gradient Synchrotron) in the early sixties, neutral currents at CERN with the CERN Proton Synchrotron (PS), the J/Φ at Berkeley National Laboratory and Stanford with the Alternating Gradient Synchrotron (AGS) and the Stanford Linear Accelerator in the seventies. More recently, the W and Z with the SppS colliers and the number of neutrinos with Large electron proton collider (LEP) and the Stanford Linear Collieds (SLC) are a clear demonstration of the continuing importance of accelerators to get a better and deeper insight to the structure and properties of the building blocks of matter, the quarks and leptons, and in the forces by which they interact [7].

b. Nuclear physics

Accelerators are the essential tool by which physicists have been able to probe the nucleus, determine its structure and behavior. Depending on the properties of interest, one is using electron, proton and more recently heavy ion beams. The increase in available energy and intensity is also opening new opportunities.

In the past, nuclear physics research has been devoted to the study of the structure of individual nuclei, their excited states and the associated spectroscopy. The availability of heavy ion machines, like the GSI (Gesellschaft $f\ddot{u}$r Schwerionenforschung) facility in Darmstadt, allows to study the dynamics of nucleus-nucleus collisions, and the fragmentation of nuclei. Sub nucleonic degrees of freedom of nuclei such as meson exchange currents are investigated with both electron and hadronic probes. The study of nuclear matter under extreme conditions allows to investigate phenomena related to the composite nature of nucleons. It is in particular hoped to reach the phase transition from nucleus to quarks and gluons by accelerating lead ions in the CERN supper proton synchrotron (SPS) and ultimately in the Large Hadron collider (LHC).

c. Cosmology and astrophysics

Accelerators are now becoming more and more complementary to telescopes. The universe originated in a hot Big Bang, temperature decreased with time and the increasing energy of accelerators and colliders allows the physicist to study experimentally

processes closer to the origin of the universe. At temperatures equivalent to an energy of 100 GeV, which is where present machines allow observations, one is 10^{-10} second from this origin and it is possible to study the moment when W and Z particles acquired their mass and disappeared from the scene. Results obtained with accelerators have allowed to explain cosmic observations such as the Hydrogen to Helium ratio and to determine the number of neutrino families.

Astrophysics issues can also be settled with accelerators. For example the understanding of the synthesis of elements in stars (nucleo - synthesis) requires the determination of the rate and cross sections of nuclear reactions. A recent development is the need to use radioactive particles beams which are necessary to investigate some reactions. Their understanding could explain some not yet understood features of stellar burning and in particular aspects of the sun behavior.

d. Atomic physics

The detailed behavior of the complex multiparticle systems which constitute atoms and ions is still far from being understood and computable.

e. Condensed matter physics and material science

The main tools used by physicists to probe the structure and properties of matter in the solid state have for a long time been X-rays produced by conventional sources and neutrons generated by nuclear reactors.

This picture has changed dramatically over the last few years with the advent of new accelerator derived radiation sources synchrotron radiation now produced by dedicated electron machines and neutrons from spallation neutron sources. In addition ion beams are used in a variety of ways.

Many research fields have been opened up or offered new prospects by the availability of synchrotron radiation with its brightness and tunability. The tunability of synchrotron radiation makes it possible to exploit the fact that each element exhibits a sharp increase in absorption at certain wave lengths called absorption edges. This

is used to obtain information on the local or long range structure of material. The technique called Extended X - ray Absorption Fine Structure gives information on the atomic environment around a particular elemental constituent of a complex material. This is used to study atomic arrangements in many amorphous materials, polymers, surface layers, thin films, etc.

Because of their absence of charge and their penetration ability, neutrons make excellent probes for the study of condensed matter. Neutron scattering allows to understand the bonding and cohesion of metals, semiconductors and insulators. Neutron diffraction is concerned with the structural arrangement of atomic particles in a material and the relation of this arrangement to its physical and chemical properties.

Energetic (500 MeV to 1 GeV) protons produce intense bursts of neutrons by spallation in a target which allows a substantial intensity improvement compared with nuclear reactors. Furthermore, the time structure of the beam provides the added advantage of low background because the source is off most of the time. Studies with spallation neutrons are complementary to these carried with synchrotron radiation on topics like crystallography, in particular for powders when single crystals cannot be grown, liquids and amorphous materials, surfaces and inter material interfaces (air - liquid, liquid - liquid and liquid - solid), polymers, thin films, membranes, measurements under shear flow, magnetic and electrical fields.

Ion beams are utilized in many complementary processes to determine the elemental composition of samples. The main techniques to determine the elemental composition of samples are :

✓Rutherford Backscattering.

✓Proton Induced X - ray Emission.

✓Secondary Ionization Mass Spectrometry.

✓Particle Desorption Mass Spectrometry.

✓Charged Particle Activation Analysis or Nuclear Reaction Analysis.

Rutherford backscattering and Proton induced X - ray emission are well - established techniques, Charged particle activation analysis and Nuclear reaction analysis are newer. While Rutherford backscattering is well adapted to study heavy elements in a light substrate which is the case of semiconductor research (Si substrate), Nuclear reaction analysis is better adapted to study the behavior of light elements in heavy substrates (metals) and finds therefore a natural field of application in metallurgy. It is being used in particular for understanding the structure and features of high temperature superconductors. It allows to characterize unambiguously what a sample really looks like and not what it was intended to be before the constituents were made to react.

Charged Particle Activation finds its field of application in two areas: ultra low concentrations and wear studies. It is applicable to most elements and allows to identify trace elements at the ppb (part per billion) level. One can determine the effect of impurities, such as carbon, nitrogen or oxygen, in metals, monitor the elaboration process and detect low level contaminants. Ion beams are used in a wide energy range (1 to 45 MeV) allowing depth analysis ranging from microns to millimeters.

Charged Particle Activation is also a sensitive and fast technique for wear studies (corrosion, erosion). One activates a thin surface layer and for suitable isotopes, the loss of activity will correspond to the loss of matter. The method was reported to be used to monitor on line industrial processes. lt has also been applied to study the effect of PH on the corrosion rate in nuclear reactors.

The utilization of small spot size ion beams, also called nuclear micro probes, in the scanning mode has transformed the proton induced X - ray emission technique from an analytical tool in an imaging device, which permits to obtain a map of the elements in the studied sample showing where they are distributed so that the device could be described as being a nuclear microscope.

The elemental map can be compared with the structure given by optical or electron microscope. A compromise must be found between resolution requiring a small spot

size and sensitivity which is directly related to beam intensity. Hence the requirement of high brightness (which is however limited by the need not to destroy the sample). Recent progress has allowed to reduce the spot size down to the micron level [7].

Reported applications of this technique include the mapping of structures in multi - layer semiconductor devices to monitor the manufacturing process, the study of high temperature superconductor compound structures, the analysis of weld failures.

The combination of Rutherford backscattering which allows to determine the depth profile with proton induced X - ray emission can give a three dimensional picture of the element distribution in the sample.

Whereas with ion beam analysis, the accelerator is used to bombard the sample with ions and detect the induced atomic or nuclear processes, in accelerator mass spectrometry (AMS) the constituents of the sample are ionized, accelerated and identified by mass spectrometry.

The high sensitivity of AMS finds applications in the semiconductor industry. Semiconductor devices are rapidly degraded by even small concentration of some impurities which can be readily detected by AMS. Another application of accelerators in material science is for radiation damage. It is of particular interest in studies of structural material for a future fusion power generator or for satellites and space systems.

f. Chemistry and biology

Accelerators are a source of radiation, in particular synchrotron light allows to get unique information on the chemical state (e.g. oxidation of molecules, the chemical bonding in solids, gases and absorbed layers, structure of complex molecules and their dynamics, kinetics of chemical reactions).

Electron accelerator with energies up to a few MeV are used in radiation chemistry studies, for instance the radiation enhanced chemical reactions of the highly active intermediate chemical states produced by the electron beam.

Radiation biology with accelerator has mainly been concerned with studies aiming

at understanding the molecular pathways of radiation damage and with studies related to cancer therapy.

Synchrotron light has revolutionized many fields of biology. It is now possible because of the brightness and tunability of this source to study the crystallography of proteins and solve large structures like viruses, follow the structural changes of a molecule binding to an enzyme.

The nuclear micro probes mentioned in the previous section find also applications in life science studies. Reported examples are the metal uptake of organisms, bio - mineralization in teeth and bones, metal related diseases, element gradient in membranes, trace elements in neurological disorders (Alzheimer disease), etc.

g. Deoxyribo Nucleic Acid (DNA) research

Synchrotron light sources allowed scientists to analyze and define how the ribosome translates DNA information into life. Their research could lead to the development of new antibiotics.

h. Pharmaceutical research

Powerful X - ray beams from synchrotron light sources allow scientists to analyze protein structures quickly and accurately, leading to the development of new drugs to treat major diseases such as cancer, diabetes, malaria and acquired immune deficiency syndrome (AIDS).

4.2 Elemental analysis

The various accelerator laboratory the composition analysis and trace element detection are now extensively used in applied science, archeology, art or even for air travel security.

In geology and mineralogy one can proceed to elements zoning in rocks and minerals, determine the composition of inclusion and analyze grain boundaries. These techniques have also been used in the analysis of the structure of lunar material and meteorites.

Progress in geology has direct application to oil exploration and mineral research. A

widely used technique in the oil industry is neutron well logging. Neutrons produced by the bombardment of a tritium target by deuterons activate the surrounding rocks.

Proton Induced X - ray Emission or Nuclear Reaction Activation Analysis is non-destructive and is used for studies of precious art objects. One has in this way been able to determine the composition of ancient jewels or of the pigment layers in old paintings. Pigment composition is a way to detect forgeries or additions to art - work, as old masters could not use the yet undiscovered organic compounds used in modern dies.

A recent application is the possibility to detect concealed explosives. These substances are nitrogen rich and can therefore be detected by neutron activation. Compact accelerators for use in airports have been designed for this application. This technique is now extended for general purpose goods inspection to detect smuggling or fraudulent shipments at customs points or ports of entry [18].

4.3 Medicine

Accelerators are used in two broad ways in medicine for diagnostics and for therapy.

a. Medical diagnostics

Radio-isotopes have proved very early that they can give unique biochemical and physiological information when injected into living organisms. The possibility of external detection offers a non-invasive way to follow changes in the distribution of tagged atoms, observe anomalies of metabolism (changes in blood flow, oxygen utilization, glucose metabolism) or detect tumours.

Accelerator produced positron emitting radio-isotopes have been found to respond better to the needs of nuclear medicine than traditional gamma emitting nuclides.

The annihilation radiation of positrons is easily detected and localized and has given rise to the growing field of Positron Emission Tomography (PET). Positron emitters are short lived and can be injected in human beings without giving rise to high radiation doses [14].

The production of these positron emitters is achieved by cyclotrons accelerating protons or deuterons in the 10 to 40 MeV range. The short half life of these nuclei requires them to be produced and utilized on the same site by dedicated facilities.

Another technique is based on the high X - ray flux available from synchrotron radiation. The sensitivity to contrast agents such as iodine can be enhanced by two or more orders of magnitude by taking the difference between a pair of exposures with monochromatic X - ray beams, one just above, the other below the agent absorption edge. The increased sensitivity makes it possible to detect restriction in arteries by angiography without the invasive procedure of inserting a catheter in a major artery.

The accelerator derived super - conducting magnets to the fastly growing field of nuclear magnetic resonance imaging, a device which has become a powerful diagnostic tool superior in many respects to X - rays scanners. The availability of reliable and powerful magnets with small energy requirements and an already proven technology has been a decisive factor in the fast diffusion of this novel imaging technique.

b. Radiotherapy

The fundamental principle of radiotherapy is to deliver a proper dose of radiation to eradicate the malign tumor(s). The area of dose must be limited to the limited area around the tumor(s), minimizing the expected damage to normal tissues. Strategically the choice of radiation beams is made upon the target area. Increasing the sensitivity of tumor(s) to specific radiation and decreasing the sensitivity of normal tissues are obtained by radiation sensitizer [15].

Unwanted damage to normal tissues is minimized by delivering the radiation from different directions crossing at the location of the tumour. Accelerators are more versatile and can provide deeper penetration when necessary.

Major progress in cancer therapy is being achieved by improvement in the local control of the tumour. This is the result both of improved diagnostic tools which allow a better localization of the malignant tissues and of the use of particle beams which

permit a higher energy deposition and a more accurate range.

Because of their high penetration and their biological effectiveness neutrons are for some cases more advantageous than photons [7]. Pions, protons and heavier ions offer the possibility of improving the damage ratio between malignant tumours and healthy tissues. With heavy charged particles one can achieve a highly localized distribution. The so called Bragg peak (region of maximum energy deposition) is only a few millimeters wide near the end of the range, which makes it possible to deliver a high dose with less damage to the overlaying and downstream tissues. The required penetration depth makes it necessary to use machines capable of producing particles in the several hundreds of MeV range.

It is estimated that 25 to 30 percent of the population of industrialized countries will contract cancer in their life-time and that about half of these will receive some form of radiation therapy. The aim of radiotherapy is to destroy the malignant cells without damaging the healthy tissues. Unfortunately, radiation travels in a straight line through the body and destroys cells in the entrance region between the surface and the tumour. Most kinds of radiation also have downstream effects, before exiting the body.

4.4 Industrial processing

a. Ion implantation

Ion implantation for manufacturing semiconductors is one of the major present industrial applications of particle accelerators. This process allows the introduction of ions of a specific type at the desired depth to dope in the appropriate way the semiconductor substrate and achieve the required circuit pattern. This technique has replaced the traditional ion diffusion used previously. It allows accurate and reproducible manufacturing of all the present compact micro - circuits.

Present trend goes in the direction of higher energies produced either by electrostatic

belt generators, radio-frequency linacs or radio-frequency quadruples's to achieve penetration depths exceeding one micron. This gives the possibility to modify bulk properties and not only the surface or to produce buried patterns, synthesize locally and in depth oxides, so as to achieve truly three dimensional semiconductor circuits [14].

Ion implantation can also be used to modify other properties than electrical conductivity, the surface hardness, the corrosion resistance, the friction coefficient, the fatigue behavior, the adhesive properties or the catalytic behavior. Applications have been found in the automotive industry to improve the performance of highly stressed components (ball bearings, crankshafts, helicopter rotor shafts).

Other applications occur in the medical field where a spectacular increase in the lifetime of artificial joints (hip, knee, etc) have been achieved.

b. Radiation processing

When passing through matter, particle beams cause excitation and ionization of the material. Charged and uncharged fragments of molecules resulting from bond breaking have high chemical activity and tend to react quickly with one another or with other molecules. This opens the possibility to perform a variety of chemical processes.

Examples are:

✓ Polymerization of low molecular components (monomers).

✓ Purification of industrial gases.

✓ Radiation modification of wood to improve mechanical, fire or biological resistance.

✓ Radiation cross - linking of polymers to create three-dimensional structures to achieve for instance insolubility in organic solvents. This process is most extensively used with polyethylene pipes and insulated wires and cables operating in hard environment conditions (high temperature, aggressive chemical media, irradiation,etc).

✓ Polyethylene cross - linking to achieve a 'memory' effect and obtain a thermo-shrinkable material used for tight packing of goods.

✓ Radiation vulcanization of rubber to improve heat resistance and resistance to

aging and deformation at high temperature.

✓ Curing of varnish and paint coatings. Radiation processing acts in three ways by polymerization of the monomers, cross-linking of the produced polymeric molecules and the development of chemical bonding between polymer and substrate.

✓ Fabrication of crease-resistant, fireproof hydrophobic textiles.

✓ Destruction of noxious material by breaking down unwanted molecules. The industrial and domestic utilization of surface-active synthetic agents (such as detergents) creates a serious sewage treatment problem since these products feature a high chemical stability. Radiation promotes their breaking into lighter and more easily removable substances.

c. Food preservation

Radiation sterilization of foodstuff has a great economic potential. It allows to avoid the chemical additives now used for food preservation and which do meet increasing objections in view of their potential carcinogenic effects or to avoid the need to maintain at low temperature ready - to - serve meals [7].

One of the most promising application of radiation technology is sterilization of culinary processed foodstuff which can after suitable packaging be stored at room temperature for several months. Successful tests have been carried out with a large variety of foods such as smoked and fried sausages, ham, roasted potatoes, meat, chicken, filleted fish, etc. The dose and energy must however be carefully adjusted to minimize the production of free radicals which in some cases may have unwanted side effects.

Another use of radiation is to suppress the activity of micro-organisms in fresh perishable food stuffs. Storage life of strawberries, cherries, peaches, grapes, tomatoes, etc can be extended by one or two weeks. Unwanted germination of agricultural crops like potatoes or onions can also be prevented by radiation.

Radiation is also used for crop protection in storehouses against insects. The main method at present of insect control consists in the treatment of grain with chemicals,

like methyl bromide or chloropicrin. This has the disadvantage, besides the high cost, of leaving toxic substances in the products.

Insect elimination by radiation is not only appropriate for food preservation in store-rooms but has also been used for suppression of pests in natural conditions by releasing sterile males over large areas.

d. Sterilization

Industrial and domestic sewage sludge contain useful organic and inorganic substances which may be used as fertilizer in agriculture or as a nourishing additive to fodder. Special treatment for killing pathogenic micro-organisms is however required beforehand, which can be achieved by moderate radiation closes. Radiation is also employed to sterilize medical products (garments, gloves) and to treat hospital waste products to ensure safe disposal.

e. Ion beam processing

Heavy ion accelerators are used to produce micro-porous membranes in thin film materials.

The main applications are filters for the food industry and porous substrates for growing cells or micro-organisms for biology or medical research.

f. Micro - lithography

X - ray lithography with synchrotron radiation produced by electron accelerator is considered as a very strong contender for the production of the next generation of integrated circuits.

4.5 Power engineering

a. Heavy ion fusion

The acceleration of heavy ions for fusion is one of the great challenge of accelerator physicists. Heavy ions to achieve inertial confinement offer several advantages over lasers which are currently studied for the same goal. The acceleration of ions can be achieved

with a higher efficiency than producing the corresponding laser beam and with a higher repetition rate.

b. Plasma heating

One of the most attractive sources of additional power is the use of a multi-megawatt ion accelerator. The accelerator generates a negative ion beam which is neutralized in a gas or by photo-detachment, before crossing the confining magnetic field. It seems possible to reach the desired performance with an radio frequency quadruple. Initially deuterium had been proposed, but heavier ions like oxygen appear more suitable.

c. Accelerator driven breeding and fission

Spallation neutrons generated by a proton accelerator could be used to convert a fertile material (^{232}Th or ^{238}U) into a fissile element. The target together with a suitable moderator can constitute a subcritical assembly which generates energy when the neutron source, i.e the accelerator is turned on. Recent progress in accelerator efficiency allows to expect an energy balance sufficient to make the concept economically attractive. As the system is not critical, it is intrinsically safe.

d. Radioactive waste incineration

By using high energy accelerators, transmuting long life time radioactive waste from fission reactors into stable or short life isotopes can works.

e. National Security

Particle accelerators play an important role in national security, including cargo inspection, stockpile, stewardship, material characterization and terrorist attack.

Generally, whether it's medical or scientific research, consumer product development or national security, particle accelerators touch nearly every part of our daily lives.

Chapter 5

Conclusion

This project work realizes as the particle accelerators are essential tools of modern science and technology in the world. The accelerators work by accelerating charged particles in a closed path or in straight line, for example, betatrons, synchrotrons, and cyclotrons accelerate charged particles in closed path whereas Linear accelerate particles in straight line. In the circular accelerator, particles are accelerated in a circular trajectory until they reach a nominal energy. Particles are steered using electromagnets, but linear accelerators use hollow cylinders of increasing lengths.

The advantage of circular accelerators over linear accelerators is that the constant cycling of the particles around the ring permits continuous acceleration. Circular accelerators are typically smaller than linear accelerators of comparable power; this is to say a linear accelerator would have to be extremely long to have the equivalent power of a circular accelerator. Nearly all modern large scale machines are circular accelerator.

Cockcroft Walton and Van de Graaff generator machines use constant potential difference to accelerate the particles. Van de Graaff generators and cyclotrons cannot accelerate electrons. Betatrons and synchrotrons are used to accelerate electrons. Betatrons work on the principle of electromagnetic induction. In betatron, the transverse magnetic field makes the electron to move in constant orbits by providing necessary centripetal force. Synchrotrons were introduced which used radio-frequency oscillators and ring - shaped magnet. Cyclotrons and betatrons are low-energy-accelerating machines,

whereas synchrotrons are high energy accelerating machines. The synchrocyclotron uses the variation in frequency to avoid and lack of resonance.

In this review we can understand that particle accelerators are used for different purposes. In the world particle accelerators are used for different applications. Very high energy accelerators are used for the production and study of elementary particles. Once the beam energy exceeds a couple of hundred Mev, mesons and other elementary particles are produced in nuclear reactions and can be studied directly or they can be used to cause various types of nuclear reactions. High energy accelerators are also in use to produce high intensity synchrotron light for basic studies in chemistry, biology and material science. The light is usually obtained by placing multiple bending magnets in the path of circulating beam of electrons.

Now particle accelerators encompass most of the fields of physics research, play an essential role in medicine for both diagnostics and therapy, are used for many industrial processes and may, in the next century, offer possible technical answers to the energy problems of mankind.

In Ethiopia there are no particle accelerators built [6]. Because of high cost to be treated by particle accelerators many patients died by cancer and tumours in Ethiopia without treatment. Therefore, if particle accelerators are built in Ethiopia it will be used for multiple purposes. For example, in research purpose, in education, in treating cancer and other dieses, in creating work for citizens, in technology, etc.

References

[1] E. J. N. Wilson, An Introduction to particle accelerators, Oxford University Press Inc., New York (2001).

[2] John Wiley and Sons, Principles of Charged Particle Acceleration,New York (1986).

[3] Helmut Wiedemann, Particle Accelerator Physics, CA 94309,Third edition.

[4] David Martin, Review of Accelerator Alignment, FIG Congress 2010 Facing the Challenges Building the Capacity Sydney, Australia, 11-16 April 2010.

[5] Stanley Humphries. Jr.,Principles of Charged Particle Acceleration, NM 87192.

[6] Federal Ministry of Health Ethiopia, National Cancer Control Plan, https://www.researchgate.net/236126483 Cancer in Ethiopia, 2015.

[7] O. Barbalat, applicatins of particle accelerators, Prepared for the ICFA Panel on SpinOff from Particle Physics, February, 1994.

[8] P.J. Bryant, A brief history and review of acceleretors, CERN Geneva.

[9] H.R. Verma, Atomic and Nuclear Analytical Methods, Punjabi University, Verlag Berlin Heidelberg 2007.

[10] Division of Physics of Beams of the American Physical Society, Accelerators and Beams, Tools Of Discovery ana innovation, 4th Edition.

[11] D. A. Edwards, Particle Accelerators for High Energy Physics A Short History, April 5, 2006.

[12] Kirk T. McDonald, Stability of Transverse Oscillations in a Betatron, NJ 08544, November 26, 2012; updated January 17, 2013.

[13] Andrew Robert Steere, A time line Of Major Particle Accelerators, Michigan State

University, 2005.

[14] Suzie Sheehy, Applications of Accelerators, September 2014.

[15] Y oungho Seo, Biomedical Applications of Particle Accelerators, Los Angeles, California 90095-1547.

[16] http://www.askphysics.com, limitations of Van de graff Generator, 8/8/2018.

[17] Akul P Patel and Mulav Rathod, Design, Simulation and Construction of Cockroft Walton Voltage Multiplier, ISSN: 2455-5703, March 2016.

[18] Cristine sutton, particle accelerator instrument, Encyclopedia Britannica, 2/8/2018.

[19] https://www.energy.gov/articles/how particle accelerators work, 3/8/2018.

[20] Sarah Cousineau, Jeff Holmes and Yan Zhang, Introduction to Accelerators, USPAS, January, 2011.

DECLARATION

I hereby declare that this master of science project is my original work and it has not presented for a degree in any other university and that all sources of material used for the thesis have been dully acknowledged.

Name: YOBSAN OLANI

Signature:————————————————.

e-mail:-yobsan.olani@gmail.com

Place and time of submission:

Addis Ababa University

Department of physics

This project has been submitted for examination with my approval as University advisor.

Name: Dr. TILAHUN TESFAYE

Signature:————————————————.

e-mail:-dtt.Tilahun@yahoo.com